MISCELLANEOUS ATTACHMENT DETAILS

	Part Number	Description 1 2 3 4 5 6	No. Off	Matl. Spec.	Plate No.
	–	WING TO FUSELAGE ATTACHMENT DETAILS, PORT (EA1.00.21) Spares for:–	–	–	
	EA3.20.135	. BLOCK, sealing, wing to fuselage joint	1	Linatex Rubber	1/1
	EA1.20.2897	. BLOCK, sealing, wing to fuselage joint	1	Linatex Rubber	1/2
	EA1.20.2899	. BLOCK, sealing, wing to fuselage joint	1	Linatex Rubber	1/3
	EA1.20.1101	. BOLT, main pick-up, wing to fuselage attachment	2	T55	1/4
	EA1.20.2277	. BOLT, special, wing to fuselage attachment	2	T55	1/5
	A25/10C	. BOLT, 2 BA hex. head	1	–	1/6
R	A25/10N	. BOLT, 1/2" BSF hex. head (Pre Alt. R60/112)	1	–	1/7
	or				
R	A59/11N	. BOLT, 1/2" BSF (Alt R60/112)	1	–	
	AS1242/1C	. BOLT, 2 BA c'sk head	10	–	1/8
	AGS571/906	. BOLT, shear, main spar to fuselage at frame 21	7	–	1/9
R	EA3.11.5179	. BUSH (Alt R60/112)	1	–	1/44
	EA1.11.129	. COLLAR, special, rear spar to fuselage	1	DTD126A	1/10
	EA3.20.573	. GUSSET, bottom, main spar closing panel	1	L72	1/11
	or				
	EA9.20.1371	. GUSSET, bottom, main spar closing panel	1	S510	1/12
	EA3.20.575	. GUSSET, top, main spar closing panel	1	L72	1/13
	or				
R	EA9.20.1373	. GUSSET, top, main spar closing panel	1	S510	1/14
	A27/CP	. NUT, 2 BA plain	1	–	1/15
	A27/NS	. NUT, 1/2" BSF slotted	1	–	1/16
	A27/SS	. NUT, 3/4" BSF slotted	2	–	1/17
	A27/WS	. NUT, 1" BSF slotted	2	–	1/18
	AGS572/J	. NUT, 9/16" BSF thin slotted	7	–	1/19
	AGS2001/C/1	. NUT, stiff, 2 BA	72	–	1/20
	AGS2002/C/1	. NUT, stiff, 2 BA	1	–	1/21
	EA1.20.2275	. PAD, special, wing attachment	2	S11	1/22
	EA1.11.127	. PIN, special, rear spar to fuselage	1	S11	1/23
	SP90/E8	. PIN, split	8	–	1/24
	SP90/H13	. PIN, split	2	–	1/25
	SP90/K17	. PIN, split	2	–	1/26
	EEAS1/1C	. SCREW, 2 BA 120° c'sk head	28	S96	1/27
	EEAS1/1.1/2C	. SCREW, 2 BA 120° c'sk head	430	S96	1/28
	EEAS1/2C	. SCREW, 2 BA 120° c'sk head	1	S96	1/29
	EEAS1/2.1/2C	. SCREW, 2 BA 120° c'sk head	24	S96	1/30
	EEAS1/4C	. SCREW, 2 BA 120° c'sk head	43	S96	1/31
	EA3.20.689	. STRIP, closing, upper, aft of spar (Supplied undrilled and with trim allowance)	1	L73	1/32
	EA3.20.691	. STRIP, closing, lower, aft of spar (Supplied undrilled and with trim allowance)	1	L73	1/33
	EA1.11.131	. WASHER, distance, rear spar to fuselage	1	L40	1/34
	EA1.20.1335	. WASHER, special, main pick-up bolt	2	L72	1/35
	EA3.20.1401	. WASHER, special, main spar to fuselage	2	Laminated	1/36
	EEAS27/16EU	. WASHER, 18 SWG	24	S515	1/37
	EEAS27/16GU	. WASHER, 14 SWG	48	S515	1/38
	AGS163/C	. WASHER, 2 BA spring	35	–	1/39
	AGS2036/C	. WASHER, 2 BA	10	–	1/40
	SP13/C	. WASHER, 2 BA plain	1	–	1/41
	SP15/P	. WASHER, 9/16" BSF plain	7	–	1/42
R	SP16/N	. WASHER, 1/2" BSF plain (Pre Alt. R60/112)	1	–	1/43
	or				
R	SP125N	. WASHER, 1/2" (Alt. R60/112)	1	–	

MISCELLANEOUS ATTACHMENT DETAILS

Part Number	Description 1 2 3 4 5 6	No. Off	Matl. Spec.	Plate No.
–	WING TO FUSELAGE ATTACHMENT DETAILS, STARBOARD (EA1.00.22) Spares for this assembly, are identical with those for assembly Part No. EA1.00.21 on page K1, except for the following deletions and additions Delete:–	–	–	
EA3.20.573	. GUSSET, bottom, main spar closing panel	1	L72	1/11
or				
EA9.20.1371	. GUSSET, bottom, main spar closing panel	1	S510	1/12
EA3.20.575	. GUSSET, top, main spar closing panel	1	L72	1/13
or				
EA9.20.1373	. GUSSET, top, main spar closing panel	1	S510	1/14
EA3.20.689	. STRIP, closing, upper, aft of spar (Supplied undrilled and with trim allowance)	1	L73	1/32
EA3.20.691	. STRIP, closing, lower, aft of spar (Supplied undrilled and with trim allowance) Add:–	1	L73	1/33
EA3.20.574	. GUSSET, bottom, main spar closing panel	1	L72	1/44
or				
EA9.20.1372	. GUSSET, bottom, main spar closing panel	1	S510	1/45
EA3.20.576	. GUSSET, top, main spar closing panel	1	L72	1/46
or				
EA9.20.1374	. GUSSET, top, main spar closing panel	1	S510	1/47
EA3.20.690	. STRIP, closing, upper, aft of spar (Supplied undrilled and with trim allowance)	1	L73	1/48
EA3.20.692	. STRIP, closing, upper, aft of spar (Supplied undrilled and with trim allowance)	1	L73	1/49
–	FRONT FUSELAGE TO CENTRE FUSELAGE ATTACHMENT DETAILS (EA1.00.23) Consisting of:–	–	–	2/1
EA1.10.1207	. BOLT, special, attachment	114	S11	2/2
EA1.10.1209	. BOLT, special, attachment	48	S94, S95 or S96	2/3
EA3.10.6541	. BOLT, special	6	–	
A25/1C	. BOLT, 2 BA hex. head	18	–	2/4
A25/2C	. BOLT, 2 BA hex. head	13	–	2/5
A25/15N	. BOLT, 1/2" BSF hex. head	4	–	2/6
R 33H2202125	. CEMENT, bostik	QR	–	
AGS2001/N/1	. NUT, stiff, 1/2" BSF	4	–	2/7
EA1.10.2713	. WASHER, special	4	–	2/8
AGS163/D	. WASHER, 1/4" BSF spring	114	–	2/9
AGS163/E	. WASHER, 5/16" BSF spring	54	–	2/10
SP15/C	. WASHER, 2 BA plain	31	–	2/11
SP15/N	. WASHER, 1/2" BSF plain	4	–	2/12
–	CENTRE FUSELAGE TO REAR FUSELAGE ATTACHMENT DETAILS (EA1.00.25) Consisting of:–	–	–	
A25/6E	. BOLT, 1/4" BSF hex. head	64	–	3/1
A25/7E	. BOLT, 1/4" BSF hex. head	16	–	3/2

MISCELLANEOUS ATTACHMENT DETAILS

	Part Number	Description 1 2 3 4 5 6	No. Off	Matl. Spec.	Plate No.
	A25/10E	. BOLT, 1/4" BSF hex. head	6	–	3/3
	A25/11E	. BOLT, 1/4" BSF hex. head	4	–	3/4
	A25/13E	. BOLT, 1/4" BSF hex head	40	–	3/5
	A25/15E	. BOLT, 1/4" BSF hex. head	8	–	3/6
	A25/13G	. BOLT, 5/16" BSF hex. head	14	–	3/7
	A25/15G	. BOLT, 5/16" BSF hex. head	4	–	3/8
	A25/16N	. BOLT, 1/2" BSF hex. head	2	–	3/9
	A25/18N	. BOLT, 1/2" BSF hex. head	2	–	3/10
R	771	. CEMENT, bostik	QR	–	
	AGS2001/E/1	. NUT, stiff, 1/4" BSF	138	–	3/11
	AGS2001/G/1	. NUT, stiff, 5/16" BSF	18	–	3/12
	AGS2001/N/1	. NUT, stiff, 1/2" BSF	4	–	3/13
	EA1.10.2713	. WASHER, special	4	–	3/16
	SP15/E	. WASHER, 1/4" BSF, plain	74	–	3/15
	SP15/N	. WASHER, 1/2" BSF, plain	4	–	3/14
	–	TAILPLANE TO REAR FUSELAGE ATTACHMENT DETAILS (EA1.00.53) Consisting of:–	–	–	4/1
	EA3.50.75	. BOLT, special pivot, tailplane attachment forward hinge point	2	S97	4/2
	EA1.12.451	. BOLT, special, tailplane actuator anchor	1	S65	4/3
	A24/PP	. NUT, 9/16" BSF, tailplane attachment forward hinge point	2	Stainless Steel	4/4
	EA1.12.453	. NUT, special, slotted, tailplane actuator anchor	1	MS	4/5
	SP21	. NIPPLE, lubricating	2	–	4/6
	SP90/E8	. PIN, split	3	–	4/7
	EA1.12.455	. WASHER, special, tailplane actuator anchor	2	L72	4/8
	–	FIN TO FUSELAGE ATTACHMENT DETAILS (EA1.00.55) Consisting of:–	–	–	4/9
R	EA1.32.75 or	. BOLT, special, fin attachment, port (Pre Alt. R60/12)	1	–	4/10
R	EK5.32.607	. BOLT, special (Alt. R60/12)	1	–	
R	EA1.32.77 or	. BOLT, special, fin attachment, starboard (Pre Alt. R60/12)	1	–	4/11
R	EK5.32.609	. BOLT, special (ALt. R60/12)	1	–	
	A25/1C	. BOLT, 2BA, hex. head	10	–	4/12
	A25/9C	. BOLT, 2BA, hex. head	6	–	4/13
	AS1242/1C	. BOLT, 2BA, csk. head	18	–	4/14
	AS1242/1-1/2C	. BOLT, 2BA, csk. head	36	–	4/15
	EEAS1/4C	. SCREW, 2BA 120° csk. head	58	S96	4/16
	EEAS1/5C	. SCREW, 2BA 120° csk. head	20	S96	4/17
	–	RUDDER TO FIN AND FUSELAGE ATTACHMENT DETAILS (EA1.00.57) Consisting of:–	–	–	4/18
	EA1.32.203	. BOLT, special, attachment, rudder to fin, top hinge	2	S11	4/19
	EA1.32.205	. BOLT, special, attachment, rudder to fin, top hinge	4	S11	4/20
	A27/SS	. NUT, 3/4" BSF, slotted	1	–	4/21
	SP90/H16	. PIN, split, 5/32" x 2" long	1	–	4/22
	EA3.33.219	. WASHER, special sealing	1	L40	4/23

MISCELLANEOUS ATTACHMENT DETAILS

	Part Number	Description 1 2 3 4 5 6	No. Off	Matl. Spec.	Plate No.
	–	REAR FAIRING TO FUSELAGE ATTACHMENT DETAILS (EA1.00.59) Consisting of:–	–	–	4/24
	A25/4E	. BOLT, 1/4" BSF, hex. head	2	–	4/25
	A27/ES	. NUT, 1/4" BSF, slotted	2	–	4/26
	AGS2001/E/1	. NUT, stiff, 1/4" BSF	4	–	4/27
	SP90/C7	. PIN, split	2	–	4/28
	EEAS1/3C	. SCREW, 2BA 120° csk. head	4	S96	4/29
	SP16/E	. WASHER, 1/4" BSF, plain	2	–	4/30
	–	TAILPLANE SEALING PLATES ATTACHMENT DETAILS (EA1.00.61) Consisting of:–	–	–	2/13
	A32/C20	. SCREW, 2BA csk. head	62	–	2/14
	–	CONTROLS TO RUDDER AND ELEVATOR ATTACHMENT DETAILS (EA1.00.63) Consisting of:–	–	–	2/15
	EEAS13/1	. BOLT, special, connecting control rod to rudder	2	S96	2/16
	EEAS14	. BUSH, connecting rod	2	S96	2/17
	EEAS63/E	. NUT, slotted, control tube connecting bolt	2	S96	2/18
	EEAS127	. PIECE, distance, control tube connection	2	S96	2/19
	SP90/C7	. PIN, split	2	–	2/20
	–	DROP TANK TO WING ATTACHMENT DETAILS, PORT (EA1.00.81) (See page Q1)	–	–	
	–	DROP TANK TO WING ATTACHMENT DETAILS, STARBOARD (EA1.00.82) (See page QA1)	–	–	
R	–	ALTERATIONS TO STRUCTURE FOR HONEYWELL AERIALS (EG9.12.7) (MOD 5233) Royal Navy aircraft only Spares for:–	–	–	
R	EK5.12.311	. ANGLE	1	L72 18 SWG	5/1
R	EK5.12.313	. ANGLE	1	L72 18 SWG	5/2
R	EK5.12.315	. CLEAT	1	L72 18 SWG	5/3
R	EK5.12.317	. CLEAT	3	L72 18 SWG	5/4
R	EK5.12.361	. FAIRING, segment	1	L93 AL-ALY	5/5
R	EK5.12.362	. FAIRING, segment	1	L93 AL-ALY	5/6
R	EK5.12.363	. FAIRING, segment	1	L93 AL-ALY	5/7
R	EK5.12.365	. FAIRING, segment	1	L93 AL-ALY	5/8
R	EK5.12.369	. FAIRING, segment	1	L93 AL-ALY	5/9
R	EK5.12.370	. FAIRING, segment	1	L93 AL-ALY	5/10
R	EK5.12.371	. FAIRING, segment	1	L93 AL-ALY	5/11
R	EK5.12.373	. FAIRING, segment	1	L93 AL-ALY	5/12

MISCELLANEOUS ATTACHMENT DETAILS

	Part Number	Description 1 2 3 4 5 6	No. Off	Matl. Spec.	Plate No.
R	EK5.12.131	. MOUNTING, forward assembly	1	–	5/13
		Spares for:–			
R	EK5.12.115	. . MOUNTING, forward	1	L72 18 SWG	5/14
R	F5000-08	. . NUT, anchor, 8-32 UNC	2	–	5/15
R	EK5.12.123	. . PLATE, mounting assembly	1	–	5/16
		Spares for:–			
R	F5000-08	. . . NUT, anchor, 8-32 UNC	10	–	5/17
R	EK5.12.125	. . . PLATE	1	S514 3 SWG	5/18
R	EK5.12.129	. MOUNTING, aft assembly	1	–	5/19
		Spares for:–			
R	EK5.12.119	. . MOUNTING, aft	1	L72 18 SWG	5/20
R	F5000-08	. . NUT, anchor, 8-32 UNC	2	–	5/21
R	EK5.12.123	. . PLATE, mounting assembly	1	–	5/22
		Spares for:–			
R	F5000-08	. . . NUT, anchor, 8-32 UNC	10	–	5/23
R	EK5.12.125	. . . PLATE	1	S514 3 SWG	5/24
R	EK5.12.105	. PLATE, reinforcing	1	L73 18 SWG	5/25
R	–	WALKWAY, FRAME 37 TO FRAME 39, INSTALLATION (EG9.12.13) (MOD 5233) Royal Navy aircraft only	–	–	
		Spares for:–			
R	EK5.12.167	. ANGLE	1	L72 18 SWG	6/1
R	EK5.12.169	. ANGLE	1	L72 18 SWG	6/2
R	EK5.12.171	. ANGLE	1	L72 18 SWG	6/3
R	EK5.12.181	. ANGLE	1	L72 18 SWG	6/4
R	EK5.12.185	. ANGLE	1	L72 18 SWG	6/5
R	EK5.12.187	. ANGLE	1	L72 18 SWG	6/6
R	EK5.12.243	. ANGLE	1	L72 18 SWG	6/7
R	EG9.12.35	. ANGLE	1	L72 20 SWG	6/8
R	EK5.12.177	. CLEAT	1	L72 18 SWG	6/9
R	EK5.12.179	. CLEAT	1	L72 18 SWG	6/10
R	EK5.12.221	. CLEAT	1	L72 18 SWG	6/11
R	EK5.12.223	. CLEAT	1	L72 18 SWG	6/12
R	EK5.12.225	. CLEAT	1	L72 18 SWG	6/13
R	EK5.12.227	. CLEAT	1	L72 18 SWG	6/14
R	EK5.12.229	. CLEAT	1	L72 18 SWG	6/15
R	EK5.12.231	. CLEAT	1	L72 18 SWG	6/16
R	EK5.12.233	. CLEAT	1	L72 18 SWG	6/17
R	EK5.12.234	. CLEAT	1	L72 18 SWG	6/18
R	EK5.12.235	. CLEAT	1	L72 18 SWG	6/19
R	EK5.12.237	. CLEAT	1	L72 18 SWG	6/20
R	EK5.12.239	. CLEAT	1	L72 18 SWG	6/21
R	EK5.12.241	. CLEAT	1	L72 18 SWG	6/22
R	EK5.12.245	. CLEAT	1	L72 18 SWG	6/23
R	EK5.12.247	. CLEAT	1	L72 18 SWG	6/24
R	EK5.12.249	. CLEAT	1	L72 18 SWG	6/25
R	EK5.12.251	. CLEAT	1	L72 18 SWG	6/26

MISCELLANEOUS ATTACHMENT DETAILS

	Part Number	Description 1 2 3 4 5 6	No. Off	Matl. Spec.	Plate No.
R	EK5.12.253	. CLEAT	1	L72 18 SWG	6/27
R	EK5.12.255	. CLEAT	1	L72 18 SWG	6/28
R	EK5.12.259	. CLEAT	1	L72 18 SWG	6/29
R	EK5.12.293	. CLEAT	1	L72 18 SWG	6/30
R	EK5.12.295	. CLEAT	1	L72 18 SWG	6/31
R	EK5.12.297	. CLEAT	1	L72 18 SWG	6/32
R	EK5.12.298	. CLEAT	1	L72 18 SWG	6/33
R	EK5.12.299	. CLEAT	1	L72 18 SWG	6/34
R	EK5.12.300	. CLEAT	1	L72 18 SWG	6/35
R	EK5.12.301	. CLEAT	3	L72 18 SWG	6/36
R	EK5.12.302	. CLEAT	4	L72 18 SWG	6/37
R	EK5.12.303	. CLEAT	1	L72 18 SWG	6/38
R	EK5.12.305	. CLEAT	1	L72 18 SWG	6/39
R	EK5.12.355	. CLEAT	1	L72 18 SWG	6/40
R	EK5.12.357	. CLEAT	1	L72 18 SWG	6/41
R	EK5.12.189	. CLEAT, frame	1	L72 18 SWG	6/42
R	EK5.12.191	. CLEAT, frame	1	L72 18 SWG	6/43
R	EK5.12.193	. CLEAT, frame	1	L72 18 SWG	6/44
R	EK5.12.195	. CLEAT, frame	1	L72 18 SWG	6/45
R	EK5.12.197	. CLEAT, frame	1	L72 18 SWG	6/46
R	EK5.12.205	. CHANNEL	1	L72 18 SWG	6/47
R	EK5.12.207	. CHANNEL	1	L72 18 SWG	6/48
R	EK5.12.209	. CHANNEL	1	L72 18 SWG	6/49
R	EK5.12.211	. CHANNEL	1	L72 18 SWG	6/50
R	EK5.12.213	. CHANNEL	1	L72 18 SWG	6/51
R	EK5.12.215	. CHANNEL	1	L72 18 SWG	6/52
R	EK5.12.217	. CHANNEL	1	L72 18 SWG	6/53
R	EK5.12.219	. CHANNEL	1	L72 18 SWG	6/54
R	EK5.12.275	. COVERING, floor	–	–	
		Spares for:–			
R	7220-99-9233841	. . SAFETY-WALK	QR	–	7/1
R	EK5.12.161	. DIAPHRAGM, forward	1	L72 18 SWG	7/2
R	EK5.12.165	. DIAPHRAGM, aft	1	L72 18 SWG	7/3
R	EK5.12.183	. DIAPHRAGM, centre	1	L72 18 SWG	7/4
R	EK5.12.257	. FAIRLEAD, half	4	–	7/5
		Attaching parts for EK5.12.257:–			
R	A25/2C	. Bolt, 2BA	2	–	7/6
R	SP10/C	. Washer, 2BA	2	–	7/7
R	EK5.12.199	. INTERCOSTAL, assembly	1	–	7/8
		Spares for:–			
R	EK5.12.279	. . CHANNEL	1	L72 18 SWG	7/9
R	EK5.12.351	. . CLEAT	1	L72 20 SWG	7/10
R	EK5.12.281	. . GUIDE, cable	1	L72 20 SWG	7/11
R	EK5.12.277	. . INTERCOSTAL	1	L72 18 SWG	7/12
R	AGS2018/C/1	. . NUT, anchor, 2BA	4	–	7/13

MISCELLANEOUS ATTACHMENT DETAILS

	Part Number	Description 1 2 3 4 5 6	No. Off	Matl. Spec.	Plate No.
R	EK5.12.201	. INTERCOSTAL, assembly	1	–	7/14
		Spares for:–			
R	EK5.12.285	. . CHANNEL	1	L72 18 SWG	7/15
R	EK5.12.353	. . CLEAT	1	L72 20 SWG	7/16
R	EK5.12.287	. . GUIDE, cable	1	L72 20 SWG	7/17
R	EK5.12.283	. . INTERCOSTAL	1	L72 18 SWG	7/18
R	AGS2018/C/1	. . NUT, anchor, 2BA	4	–	7/19
R	EK5.12.203	. INTERCOSTAL	1	L72 18 SWG	7/20
R	EG9.12.17	. INTERCOSTAL	1	L72 20 SWG	7/21
R	AGS2007/C/1	. NUT, anchor, 2BA	12	–	7/22
R	EK5.12.173	. PAD, radius (Make from EEAS8/C)	10	–	7/23
R	EK5.12.261	. PANEL, floor	1	L72 18 SWG	7/24
R	EK5.12.269	. PLATE, access, assembly	2	–	7/25
		Spares for:–			
R	EK5.12.273	. . ANGLE	1	L72 18 SWG	7/26
R	EK5.12.271	. . PLATE, access	1	L72 16 SWG	7/27
R	7220.99.9233841	. . SAFETY-WALK	QR	–	7/28
		Attaching parts for EK5.12.269:–			
R	EEAS1/2$^{1}/_{2}$C	. Screw, 2BA	6	–	7/29
R	EK5.12.289	. PLATE, landing	1	L72 18 SWG	7/30
R	EK5.12.291	. PLATE, landing	1	L72 18 SWG	7/31
R	EK5.12.359	. PLATE	1	–	7/32
R	–	STRUCTURE, MOUNTING, FOR RADAR ALTIMETER TRANSMITTER RECEIVER (EG9.12.19) (MOD 5233) Royal Navy aircraft only	–	–	
R	A25/4C	. BOLT, 2BA	8	–	8/1
R	EG9.12.21	. DIAPHRAGM, forward	1	–	
		May be made from the following:–			
R	EA2.83.1107	. DIAPHRAGM, assembly	1	–	8/2
		Comprising:–			
R	EA2.83.1109	. . DIAPHRAGM	1	L72 18 SWG	8/3
R	AGS2001/B/1	. . NUT, stiff, 4BA	8	–	8/4
R	EG9.12.23	. DIAPHRAGM, rear	1	L72 18 SWG	8/5
R	EG9.12.25	. DIAPHRAGM, top (May be made from EA2.83.545)	1	L72 18 SWG	8/6
R	EG9.12.27	. DIAPHRAGM, inboard (May be made from EA2.83.1101)	1	L72 18 SWG	8/7
R	AGS2001/C/1	. NUT, stiff, 2BA	8	–	8/8
R	EG9.12.29	. PACKING	1	L72 18 SWG	8/9
R	EG9.12.33	. PACKING	1	L65 Bar	8/10
R	EG9.12.15	. PACKING	1	L65 Bar	8/11
R	0101 HMT/1	. RACK, mounting	1	–	8/12
R	EG9.12.31	. TRAY, mounting	1	L72 16 SWG	8/13
R	SP124/D	. WASHER	8	–	8/14

MISCELLANEOUS ATTACHMENT DETAILS

	Part Number	Description 1 2 3 4 5 6	No. Off	Matl. Spec.	Plate No.
R	–	SWITCHES, RADAR ALTIMETER INSTALLATION (EG9.80.2059) (MOD 5233) Royal Navy aircraft only Spares for:–	–	–	
	National Plastics				
R	X114	. BEADING, black	QR	–	9/1
	Ward Brooke				
R	WB/UN/1146/S/5/W	. BLOCK, terminal, 5 way	1	–	9/2
		Attaching parts for WB/UN/1146/S/5/W:–			
R	AGS2001/B/4	. Nut, stiff, 4BA	2	–	9/3
R	EEAS550/5	. Plate, ident	1	–	9/4
R	A44/B20	. Screw, 4BA	1	–	9/5
R	A44/B24	. Screw, 4BA	1	–	9/6
R	SP15/B	. Washer, 4BA	2	–	9/7
R	A61/2B	. BOLT, 4BA	8	–	9/8
R	EG9.80.2065	. BRACKET, assembly	1	–	9/9
		Spares for:–			
R	EG9.80.2067	. . BRACKET	1	L164 16 SWG	9/10
R	AGS2012/C/33	. . NUT, anchor, 2BA	2	–	9/11
R	AGS2001/B/3	. NUT, stiff, 4BA	2	–	9/12
R	EG9.80.2063	. PANEL, engraved	1	–	9/13
		Spares for:–			
R	EG9.80.2061	. . PANEL, blank	1	L164 16 SWG	9/14
		Attaching parts for EG9.80.2063:–			
R	AS2923/1/C	. Bolt, 2BA	2	–	9/15
R	AS4566/$^{1}/_{2}$/C	. Bolt, 2BA	2	–	9/16
R	AS10512-M1	. SHROUD, terminal	3	–	9/17
R	AS10512-A2	. SWITCH	3	–	9/18
R	SP15/B	. WASHER, 4BA	1	–	9/19

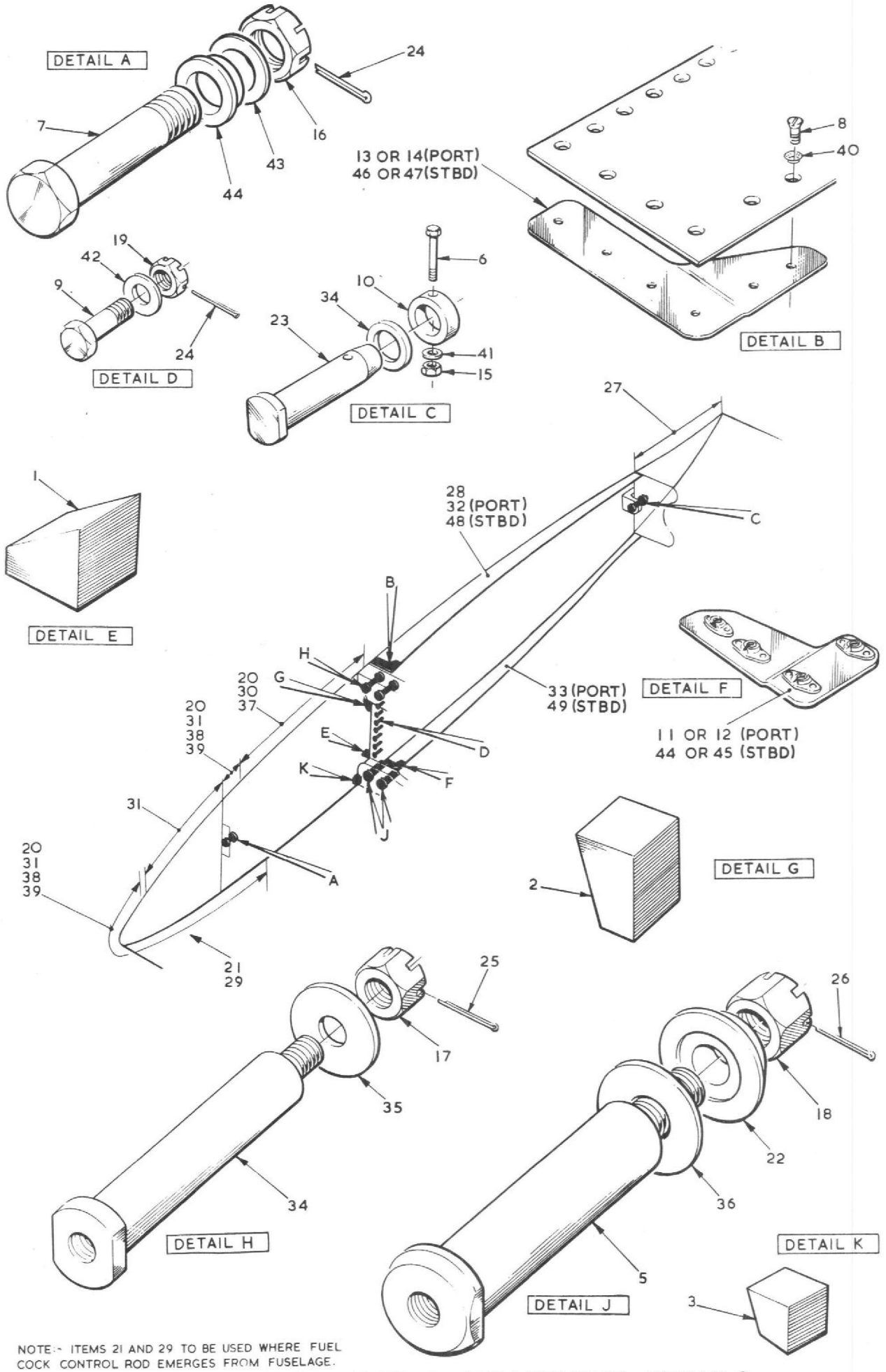

NOTE:- ITEMS 21 AND 29 TO BE USED WHERE FUEL COCK CONTROL ROD EMERGES FROM FUSELAGE.

FIG. 1 MISCELLANEOUS ATTACHMENT DETAILS

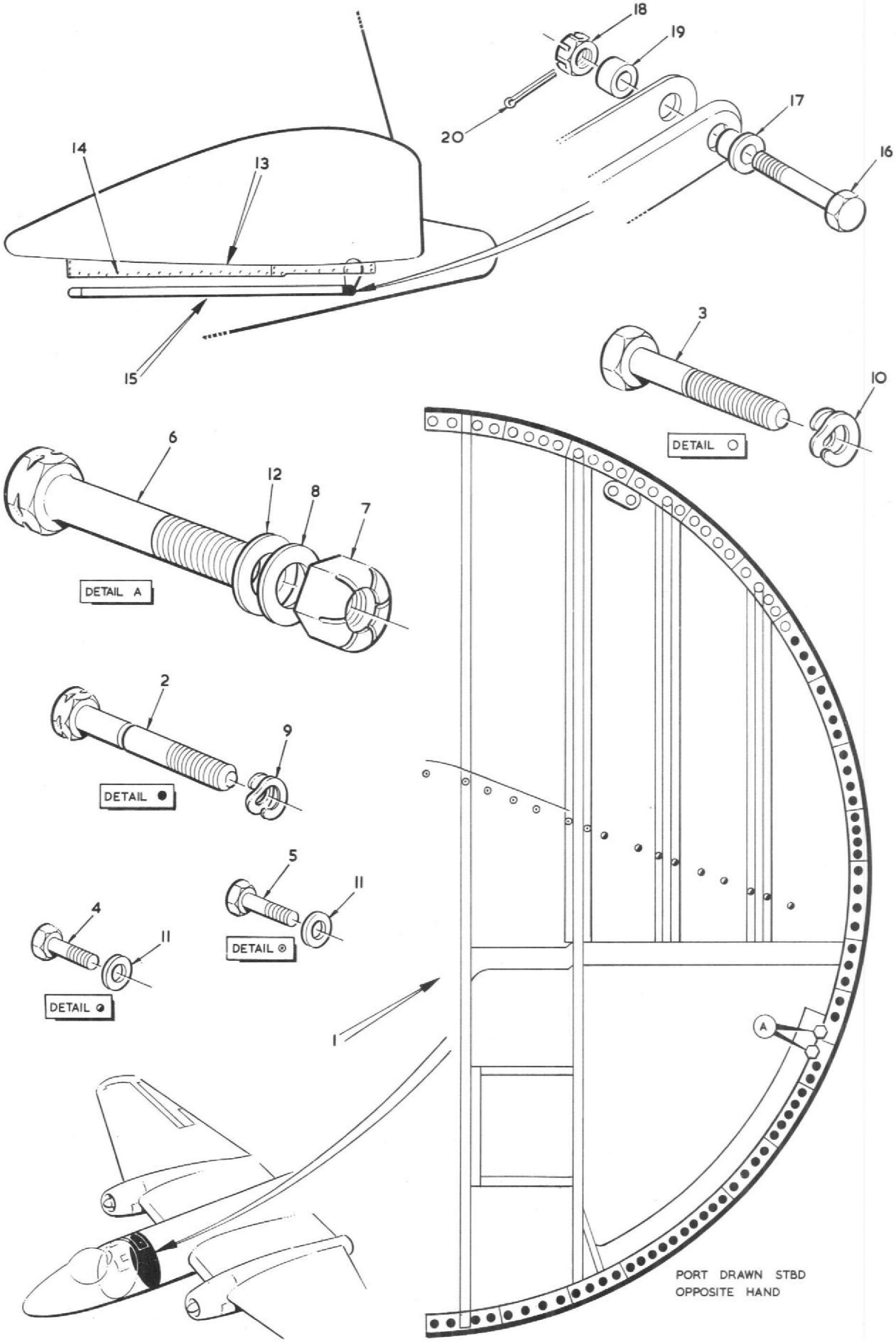

FIG. 2 MISCELLANEOUS ATTACHMENT DETAILS

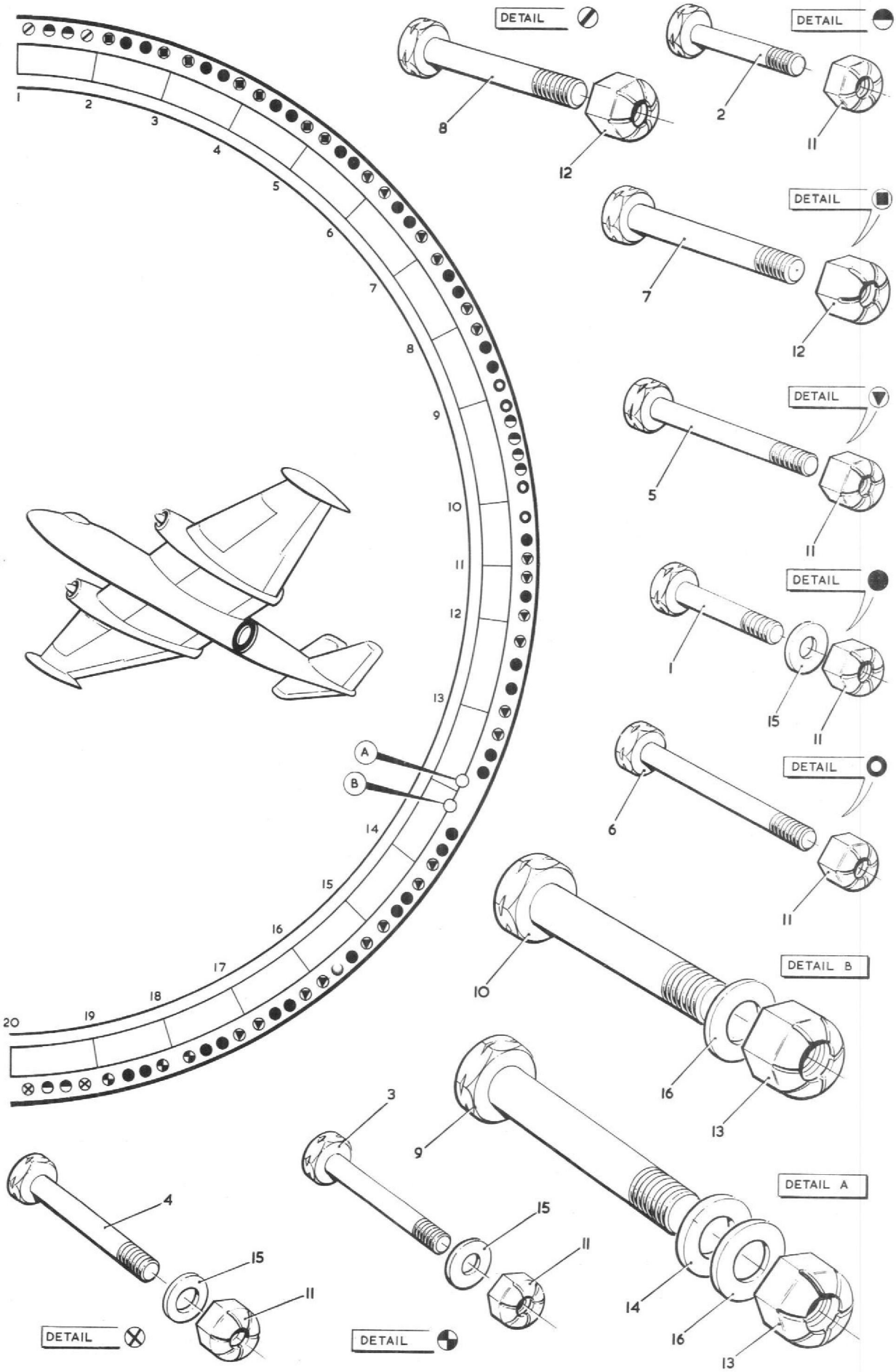

FIG.3 MISCELLANEOUS ATTACHMENT DETAILS

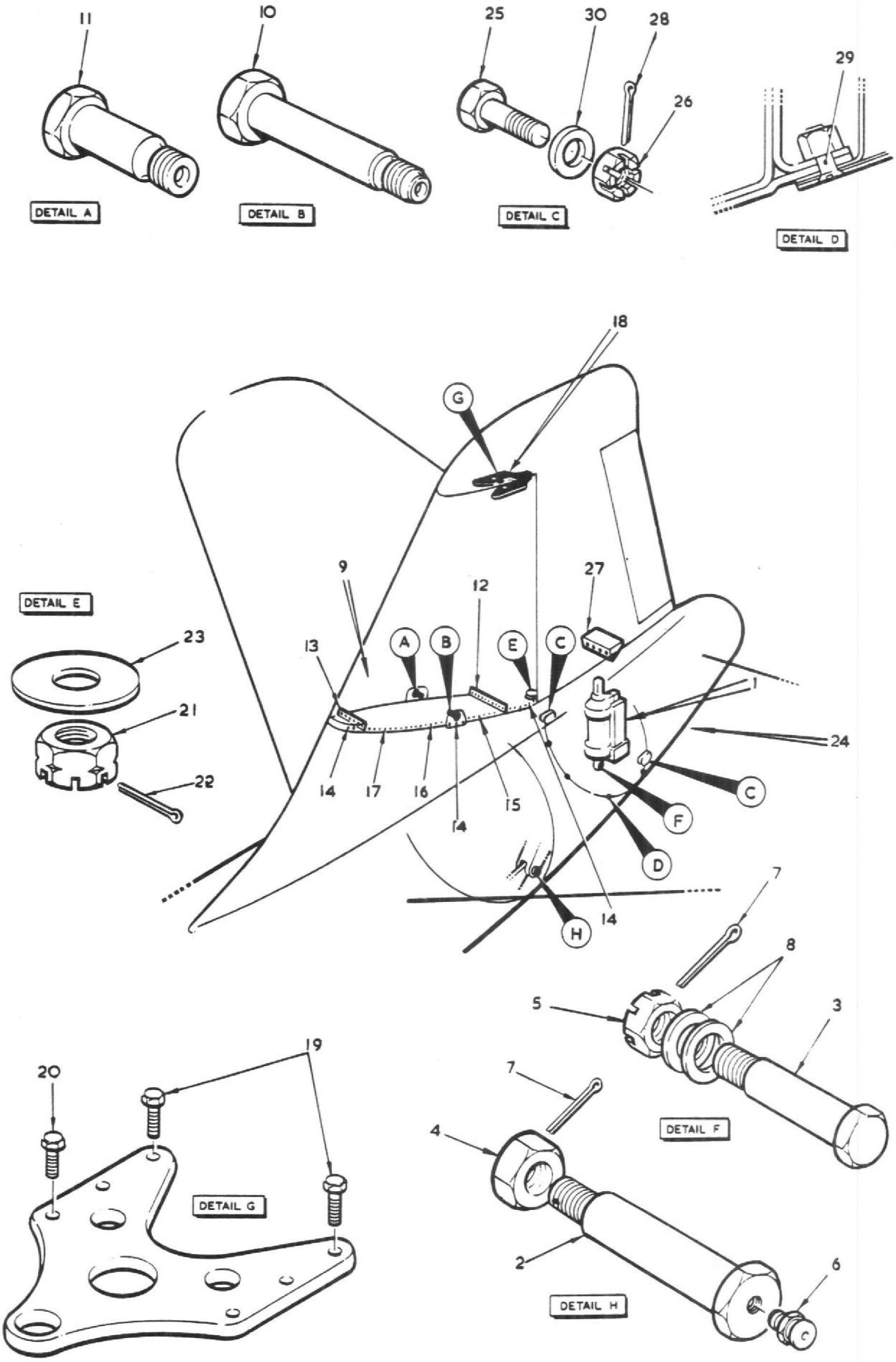

FIG.4 MISCELLANEOUS ATTACHMENT DETAILS

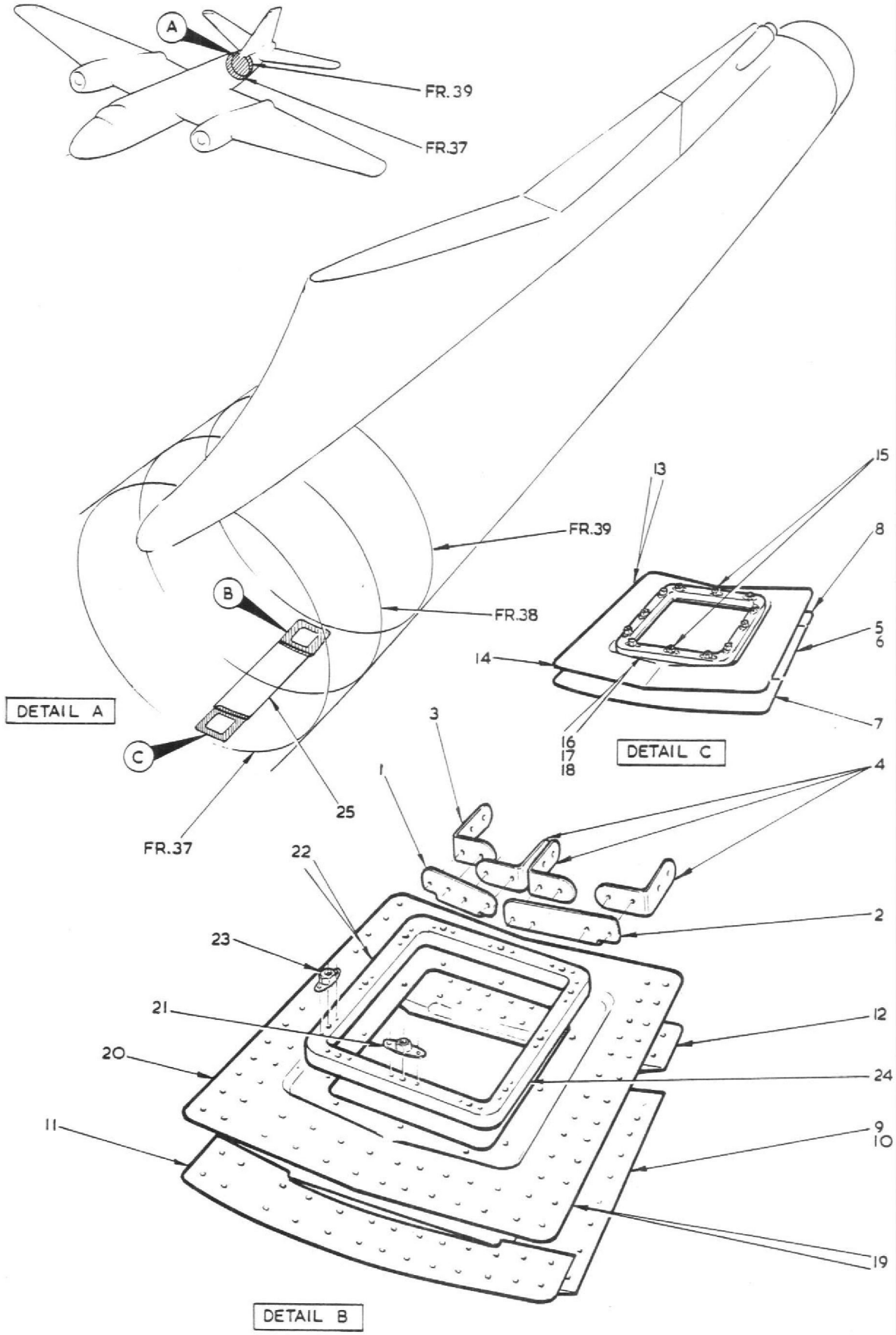

FIG. 5 MISCELLANEOUS ATTACHMENT DETAILS

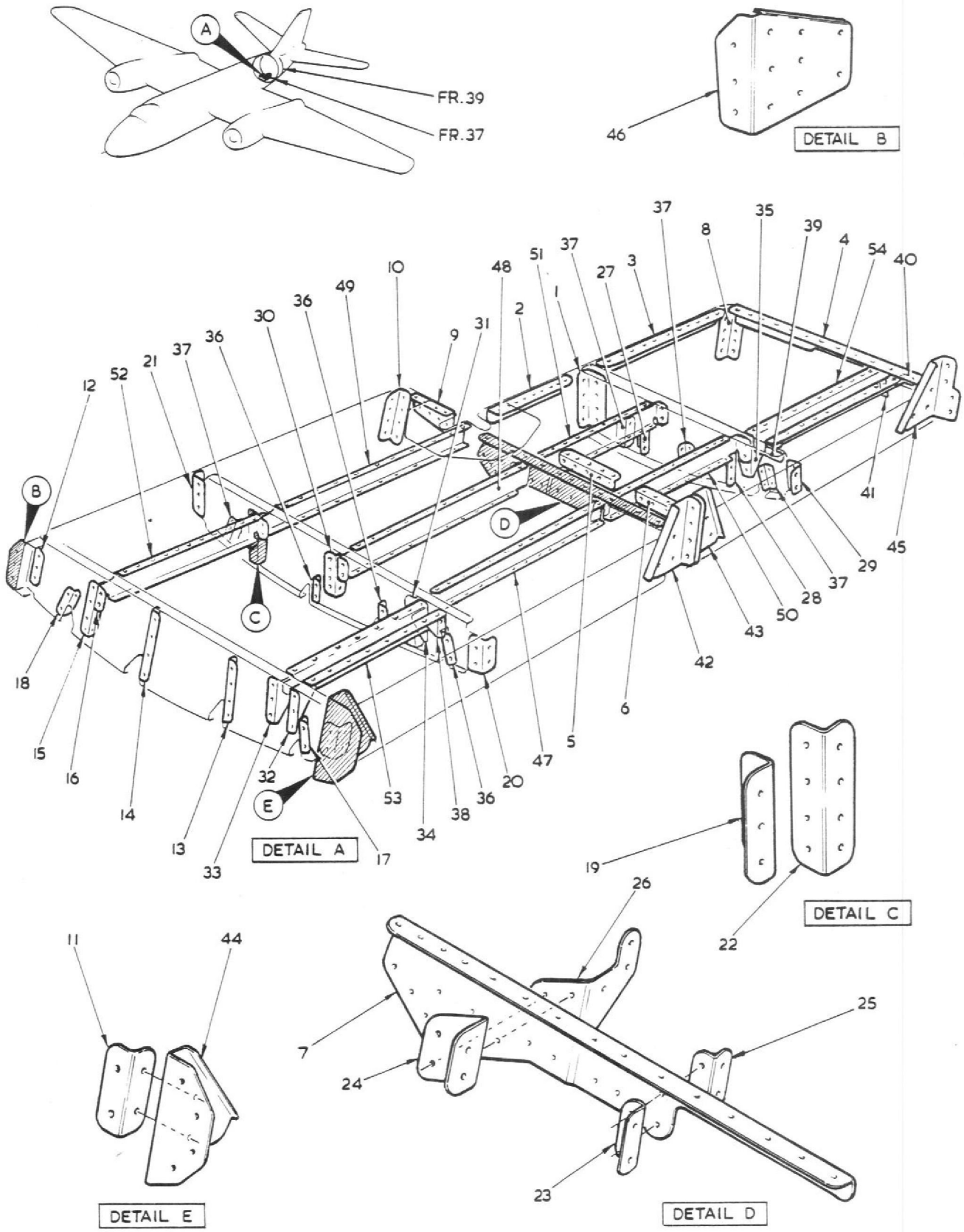

FIG.6 MISCELLANEOUS ATTACHMENT DETAILS

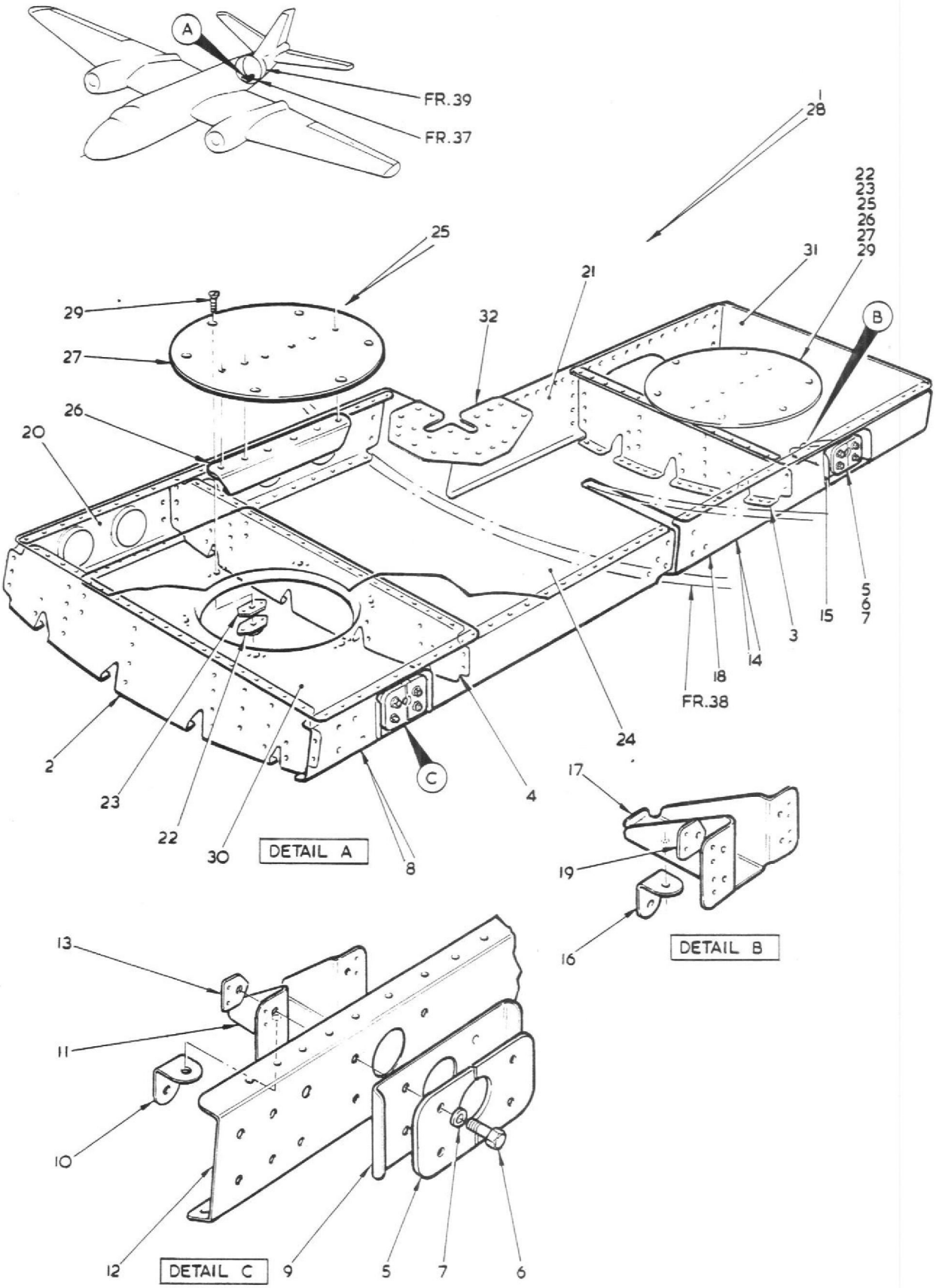

FIG.7 MISCELLANEOUS ATTACHMENT DETAILS

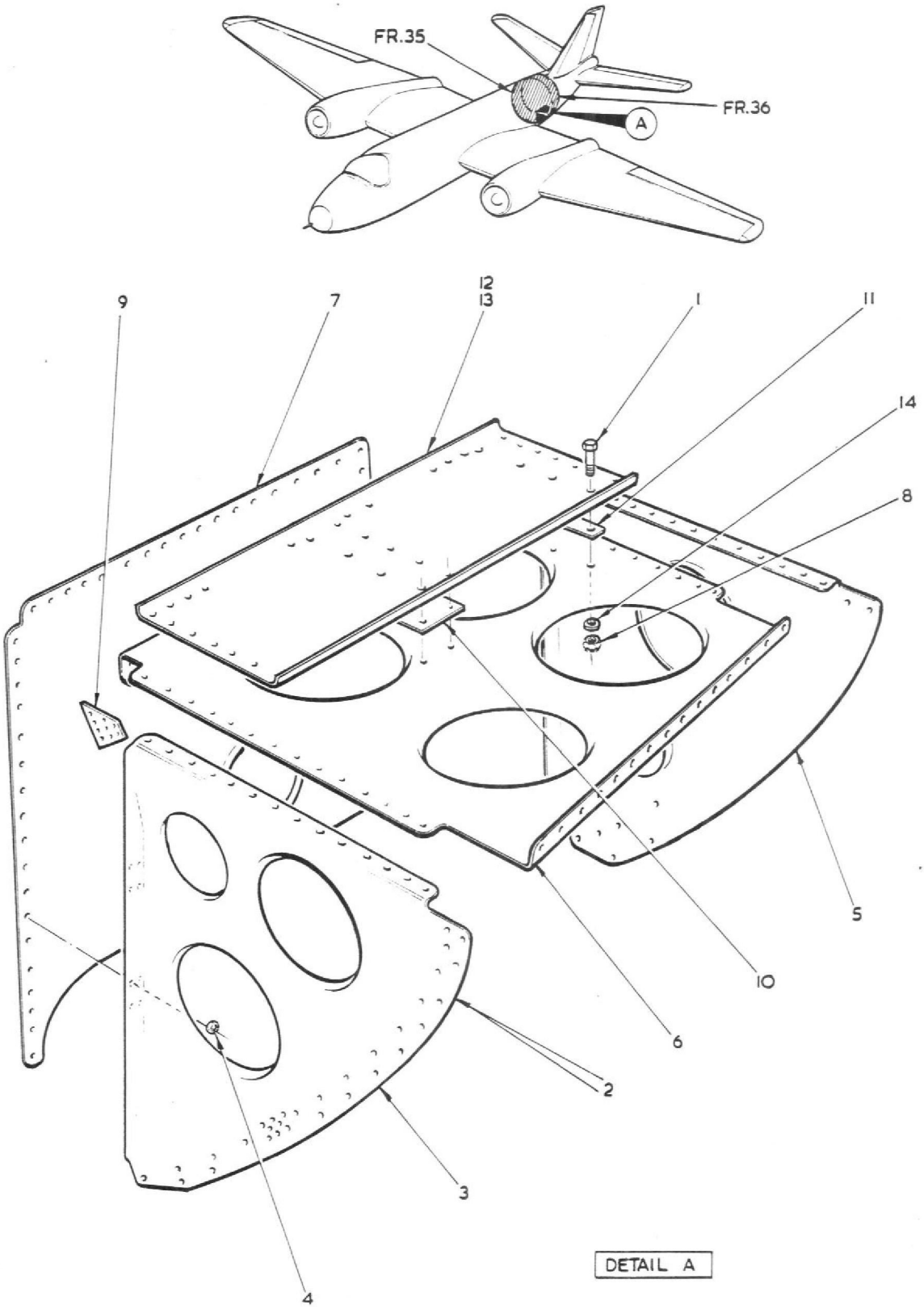

FIG.8 MISCELLANEOUS ATTACHMENT DETAILS

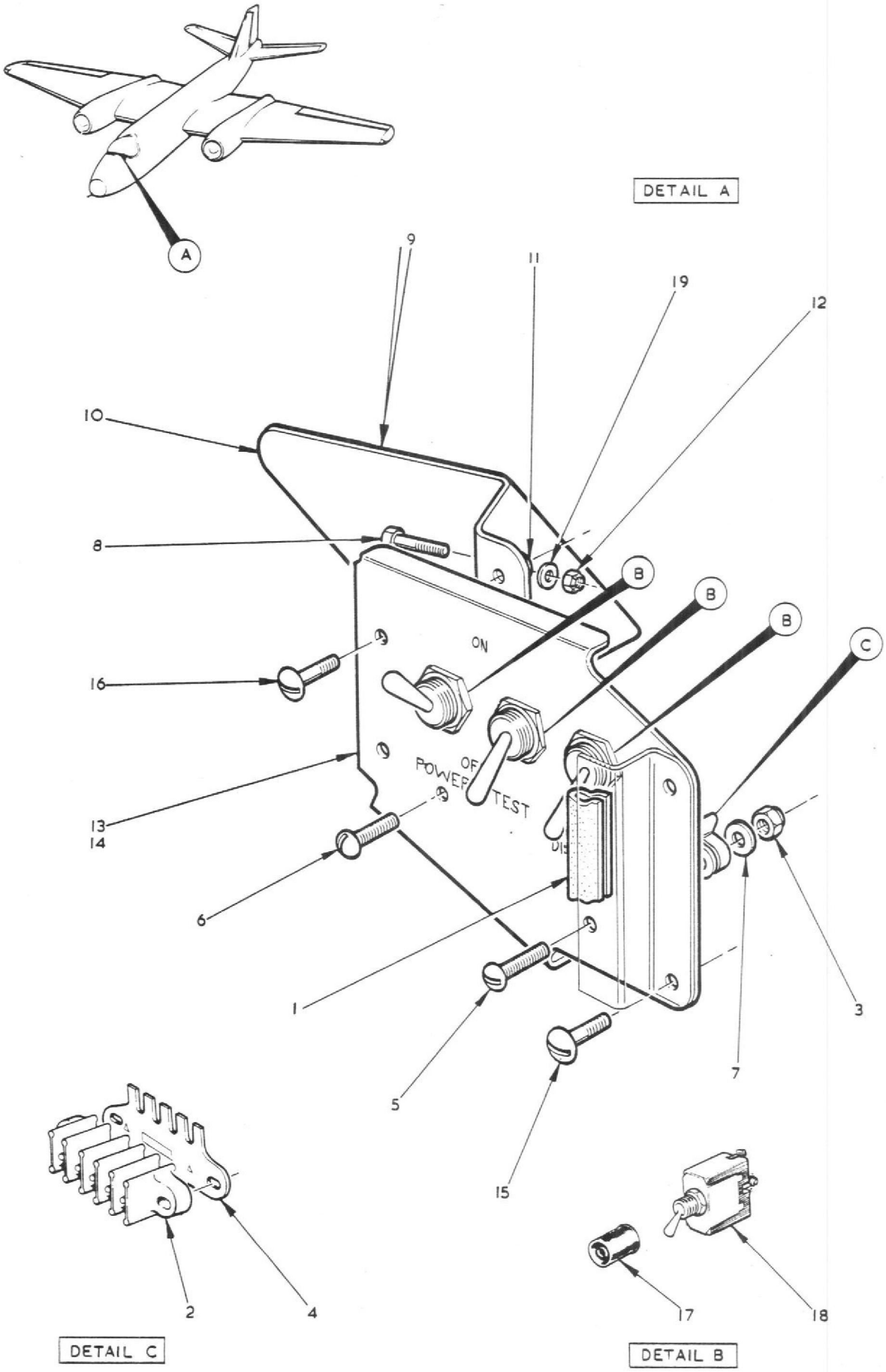

FIG. 9 MISCELLANEOUS ATTACHMENT DETAILS