Chapter 2E SERVICING

LIST OF CONTENTS

	Para.
General	1
Weapon pack simulator	2
Cabin simulator (Firestreak)... ...	4
Cabin simulator (Red Top)	5

LIST OF ILLUSTRATIONS

	Fig.
Circuit diagrams	
Weapon pack simulator	1-1A
Routeing diagrams	
Fire control	2-2A
Guided weapons...	3-3A
Rockets	4-4A
A.I. signals	5

General

1. Provision is made for checking both the aircraft armament circuits and the weapon pack circuits, by use of simulator test boxes. The simulator box covering the aircraft circuits, along with its method of use and servicing instructions, is described in this chapter. Due to removal of the weapon packs from the aircraft to workshop bay for servicing, the information relating to the Firestreak and Red Top weapon pack circuit testing is given in their associated publications.

Weapon pack simulator

2. So that the whole of the armament circuit can be checked for faults before attaching a weapon pack to the aircraft, a similator test box Type 26DK/1504578 is available. This unit enables all weapon conditions to be simulated, and takes the form of a portable carrying case complete with switches, indicator lamps, continuity tester and pure air pressure tester. Trailing leads of a suitable length for attachment to the aircraft are stowed in the box lid.

3. The simulator is connected by trailing leads to the plug and socket connection points in the aircraft pack bay. The operator then sits in the cockpit with the simulator on his knees and is thus in a position to operate both aircraft and simulator switches. Instructions for carrying out armament checks using the weapons pack simulator are to be found in A.P.101B-1000-5A3C Sect.1, Chap.2, S.P.123(D).

Cabin simulator (Firestreak)

4. This test box, with its associated switches and indicators, is connected by trailing leads and plug and socket connections to the Firestreak pack undergoing check in the servicing bay. It reproduces the aircraft circuit conditions and is used according to the instructions given in the Firestreak publication A.P.118C-0701-1.

Cabin simulator (Red Top)

5. This test box, with its associated switches and indicators, is connected by the trailing leads and plug and socket connections to the Red Top weapon pack undergoing bay servicing. It reproduces the aircraft circuit conditions and is used according to the instructions given in the Red Top publication A.P. 118B-0601-1.

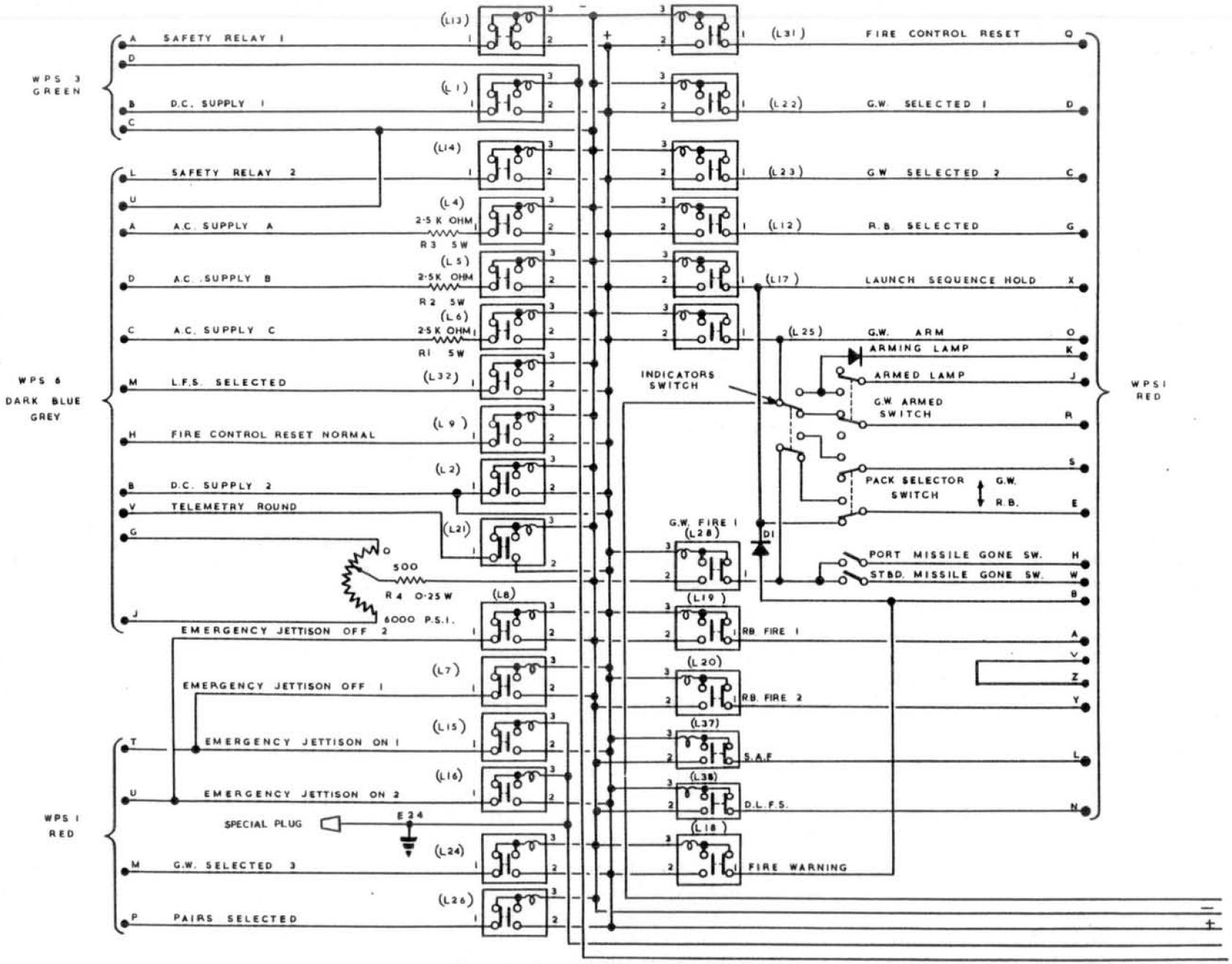

FIG.1. WEAPON PACK SIMULATOR

◀ MOD G.E.8943 EMBODIED ▶

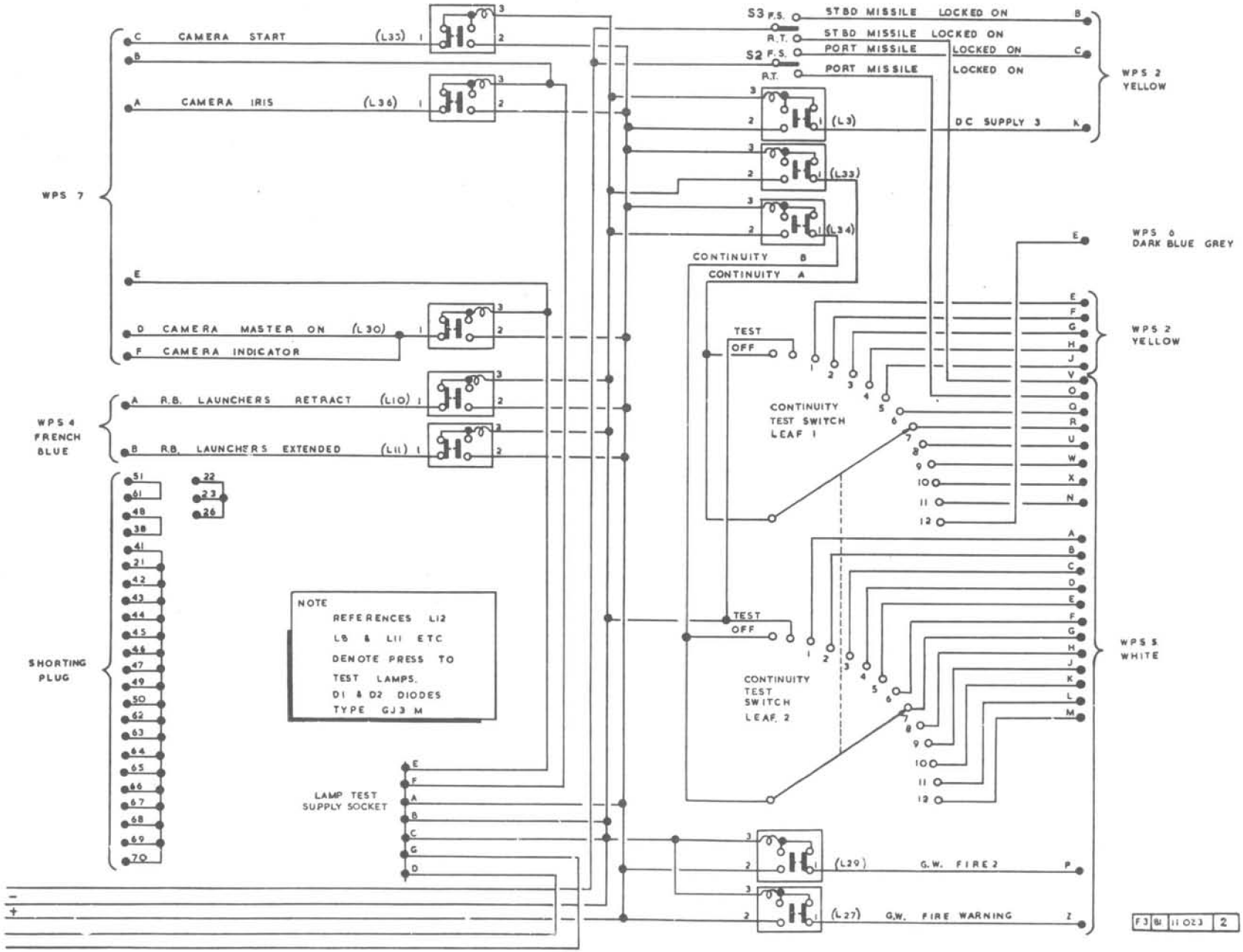

FIG.1A. WEAPON PACK SIMULATOR

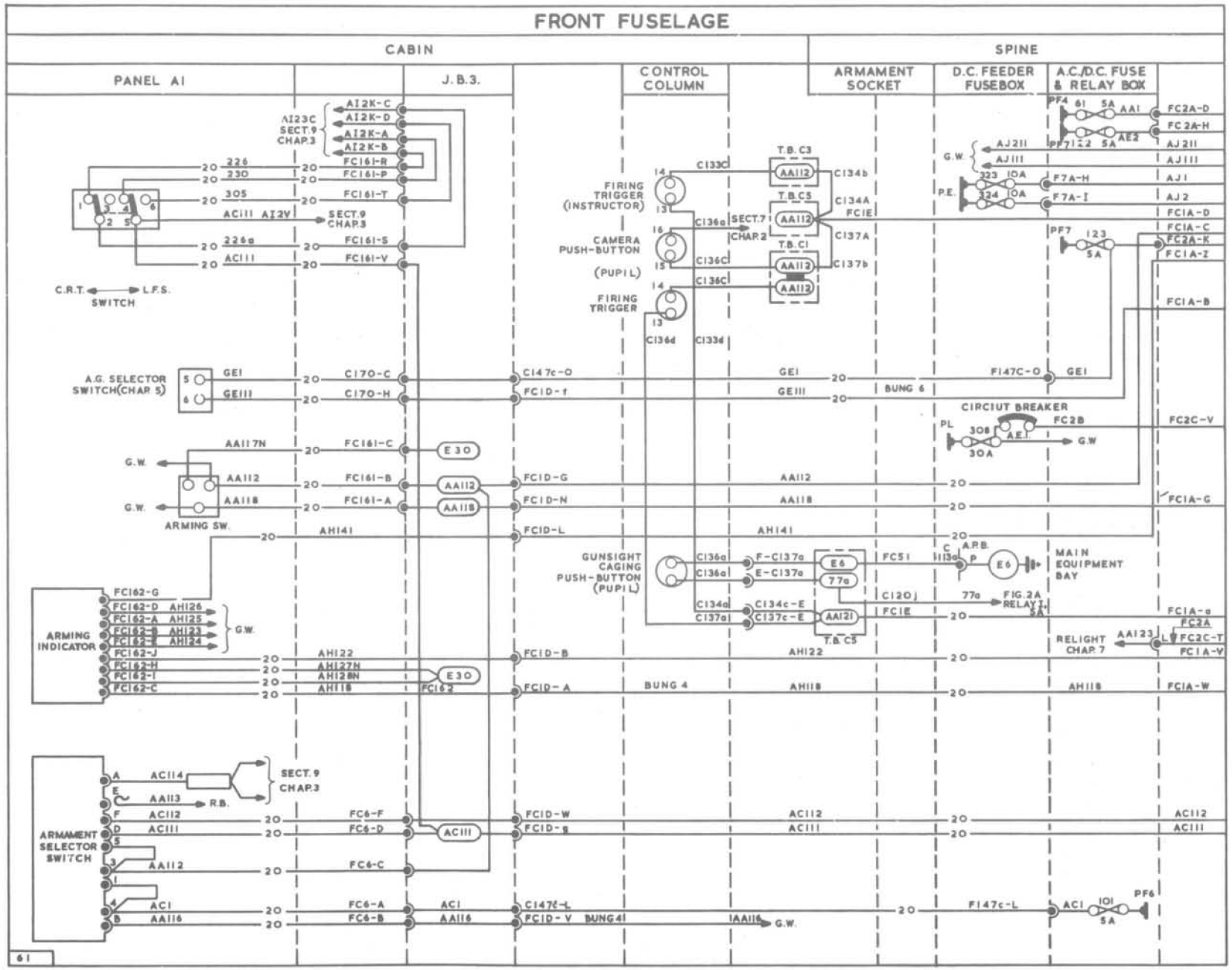

FIG. 2. FIRE CONTROL

◀ MOD 4785 EMBODIED ▶

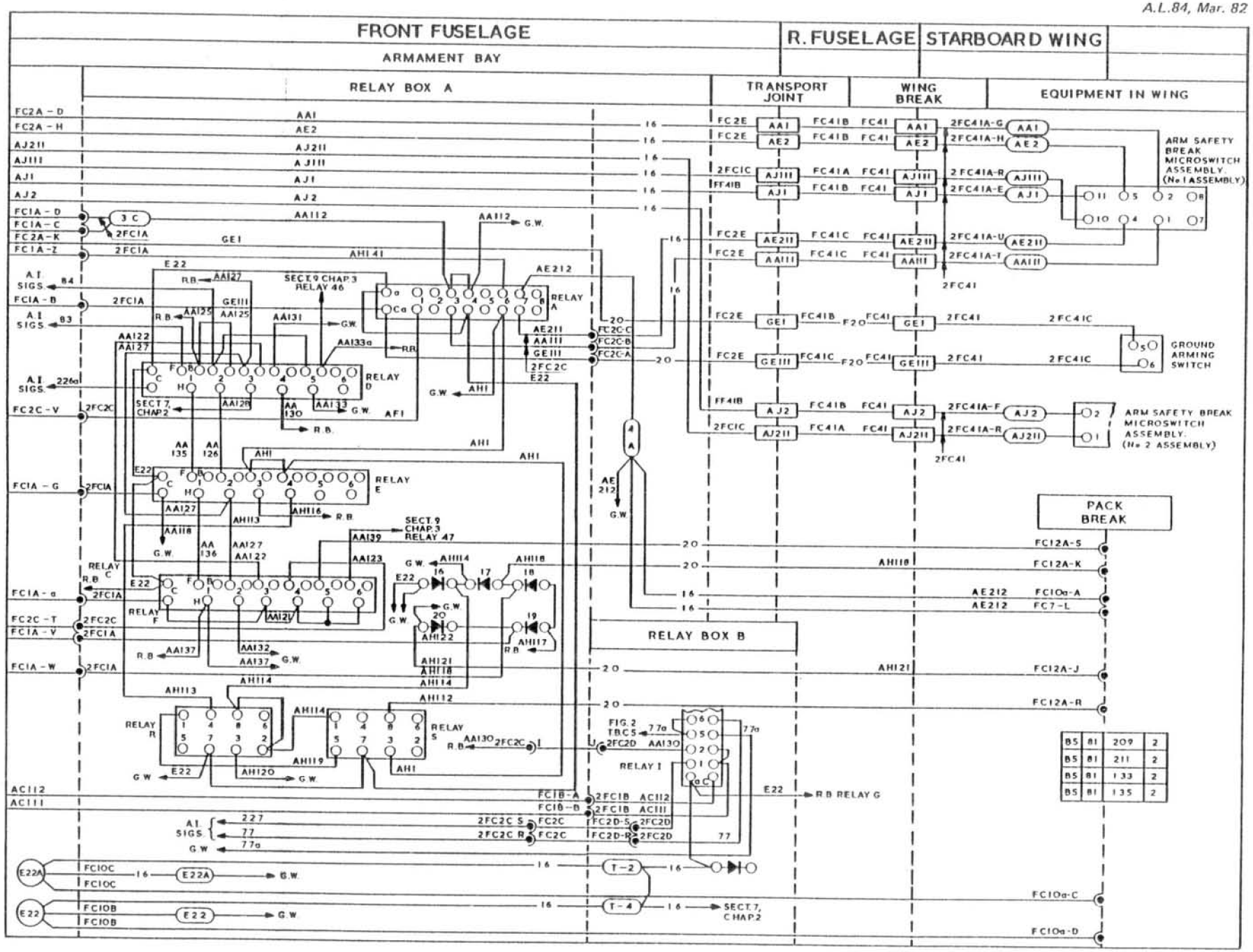

FIG. 2A. FIRE CONTROL

◀ WIRING CODES AMENDED ▶

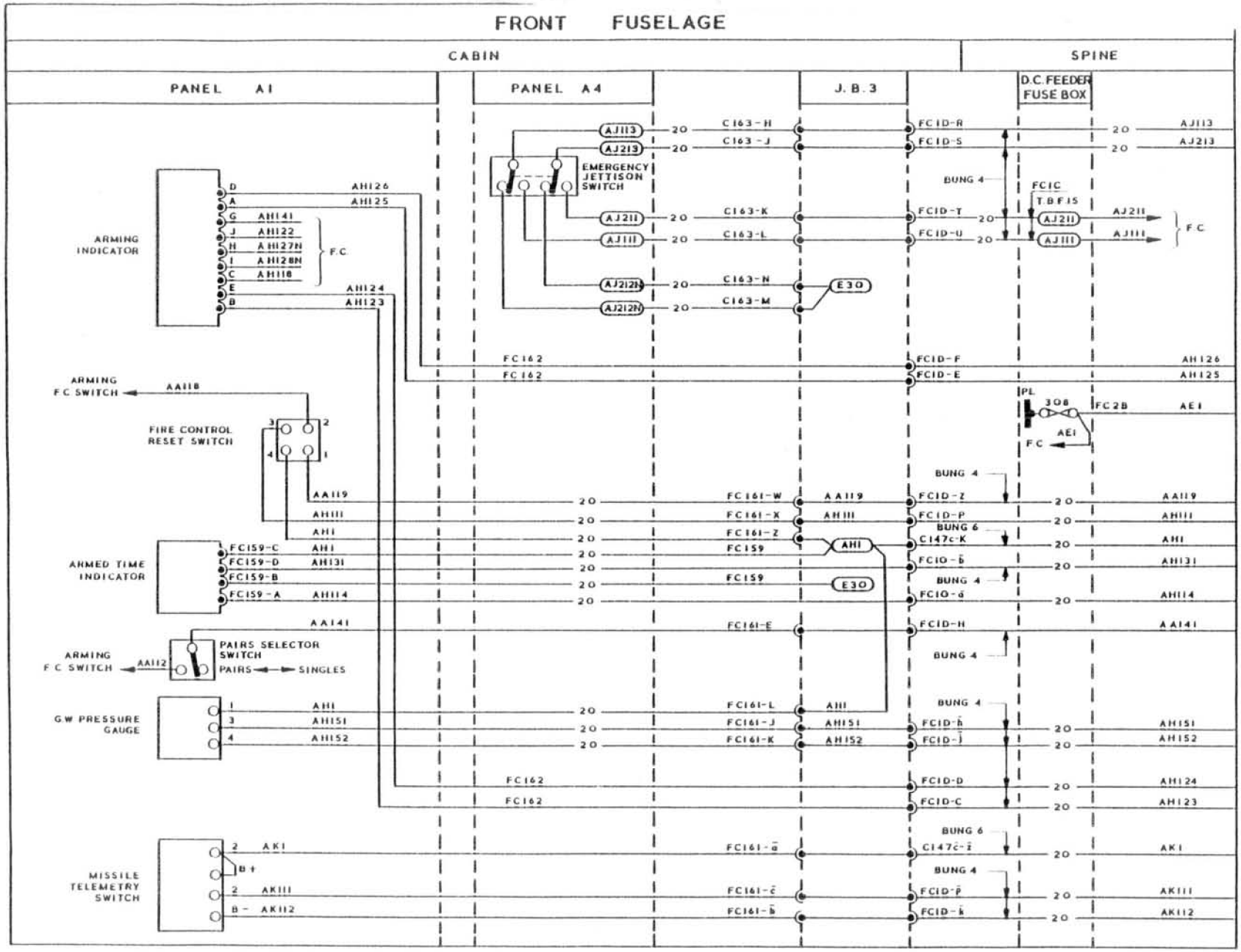

FIG.3. GUIDED WEAPONS

◀ WIRING CODE AMENDED ▶

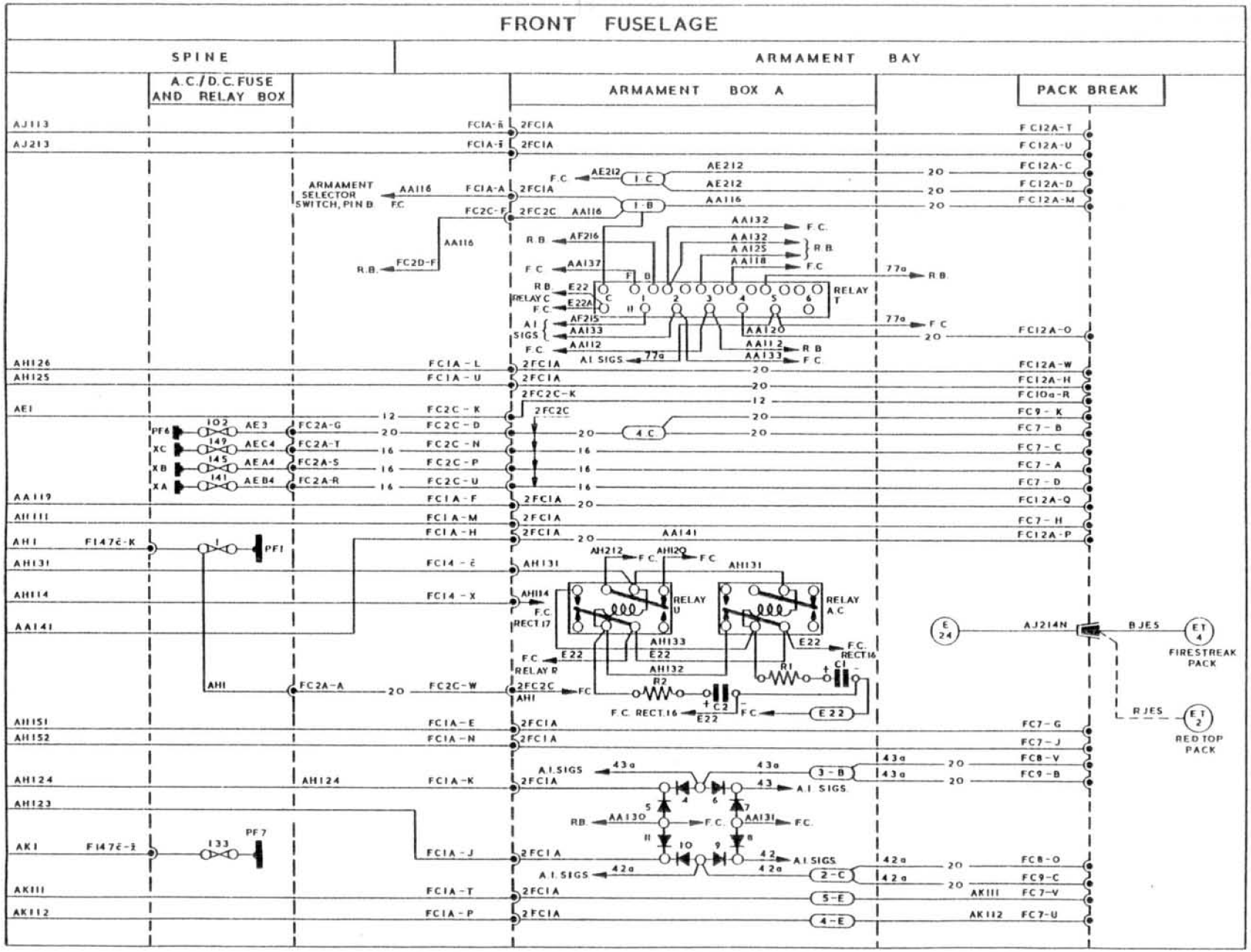

FIG. 3A. GUIDED WEAPONS

◀ CIRCUIT CODE AND CONNECTOR AMENDED ▶

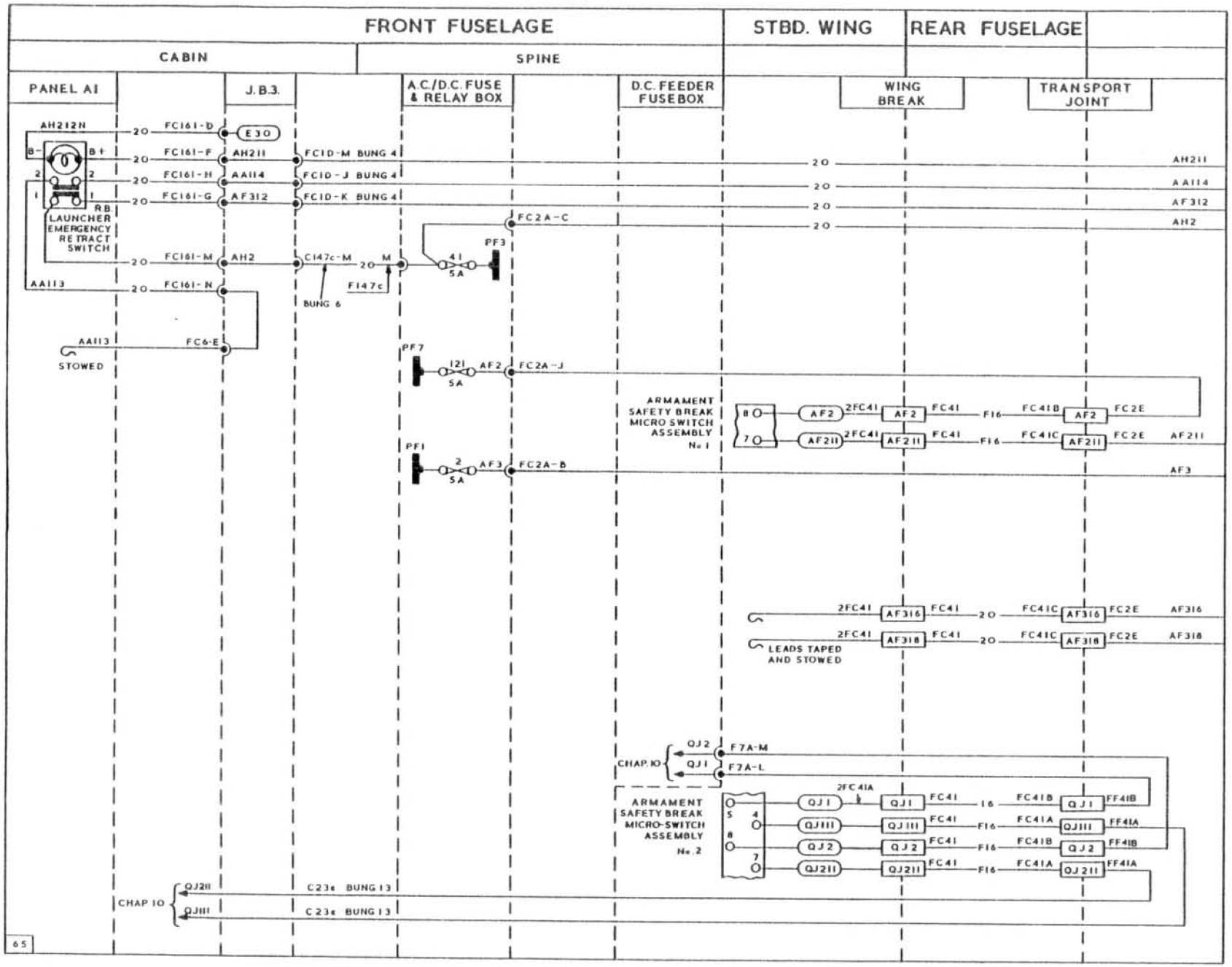

FIG.4. ROCKETS

◀ CIRCUIT AND WIRING CODES AMENDED ▶

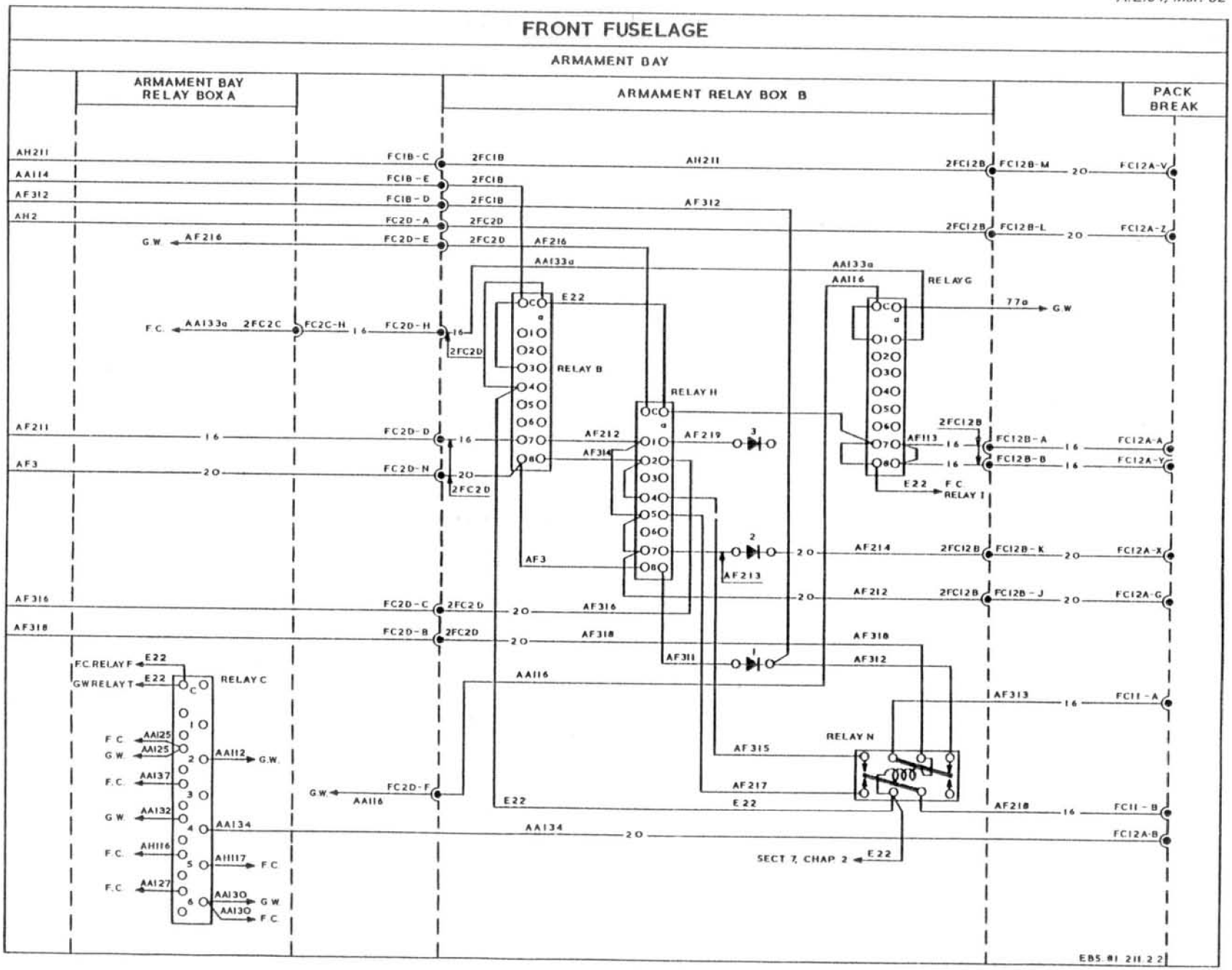

FIG. 4A. ROCKETS

◀ CIRCUIT CODES AND CONNECTOR AMENDED ▶

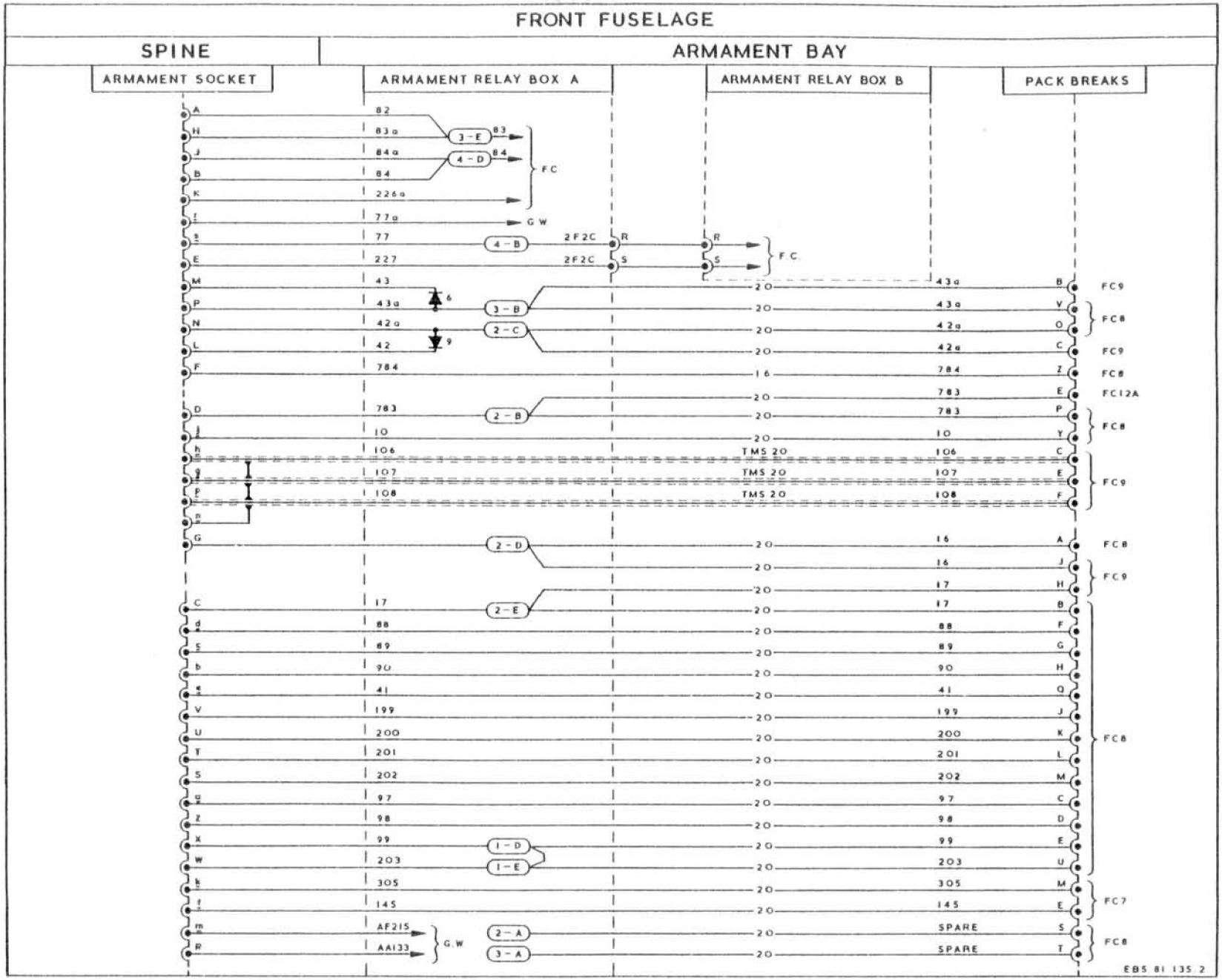

FIG. 5. A.I. SIGNALS

This file was downloaded
from the RTFM Library.

Link: www.scottbouch.com/rtfm

Please see site for usage terms,
and more aircraft documents.