FUSELAGE—HOOD AND WINDSCREEN

	Ref. No.	Part No.	Description (1 2 3 4 5)	No. Off	Material Specification	M.R. Class of Store	Plate No.
		E.219298	HOOD AND WINDSCREEN INSTALLATION, ASSEMBLY	—	—		
	9968	F.231518	Angle, at centre beam (Mod. 806)	2	L.65.C	C.	JF.1
	9971	DTD.487/26/C	Bolt, securing bush and plug end	1	DTD.487	C.	JF.1
		C.231273	ADDITIONAL DETAILS, ASSEMBLY	—	—		
		A.231224	Housing, block, forward, port	1	S.94.B		
		A.231225	Housing, block, forward, starboard	1	S.94.B		
		A.231430	Housing, block, aft, port	1	S.94.B		
		A.231431	Housing, block, aft, starboard	1	S.94.B		
		F.232698	Packing, port	1	—		
		F.232699	Packing, starboard	1	—		
		F.230878	Shim, aft	5 (max.)	Laminated Steel		
		F.232700	Shim, forward	4 (max.)	Laminated Brass		
	8895	F.216574	Shim	7 (max.)	Laminated Brass	C.	
		F.230879	Spigot	2	—		
	26VA/6034612	Std.1509/23/070	Tube, distance	2	L.62	C.	4
	11067	Std.1509/23/050	Tube, distance	2	L.62	C.	4
	1603	Std.1700/1C	Bolt, countersunk head	41	S.95.B	C.	5
	9810	Std.1700/5C	Bolt, countersunk head	8	S.95.B	C.	5
	8901	Std.1700/16C	Bolt, countersunk head	2	S.95.B	C	5
	8902	Std.1700/22C	Bolt, countersunk head	2	S.95.B	C.	5
	1506456	Std.1702/5C	Bolt, countersunk head	12	S.95.B	C.	5
	9969	F.231520	Bush, strut attachment (Mod. 806)	2	BSS.369	C.	JF.1
	9970	F.231521	Bush, at plunger external tube (Mod. 806)	1	BSS.369	C	JF.1
	8903‡	C.219831	Finisher, front	1	L.72	C	JF.2
	8904‡	E.219832	Finisher, side, port	1	—	C.	JF.2
8905‡		E.219833	Finisher, side, starboard	1	—	C.	JF.2
	10094	E.233786	Hood, group (Less seal) (Mod. 803)	1	—	A.	
		E.219020	ADDITIONAL DETAILS, ASSEMBLY	—	—		
		DTD.487/2/C	Bolt, securing roller	2	DTD.487		
		DTD.487/23/C	Bolt, securing roller	1	DTD.487		
		DTD.487/25C	Bolt, securing roller	1	DTD.487		
	9972	DTD.487/25E	Bolt, securing roller	1	DTD.487	C.	JF.1
		C.218631	Bracket, hinge, group	1	—		
	8906	F.210825	Bolt, special, for rollers	1	S.95.B	C.	JF.1
	11173	F.258485	Roller (AS.1150/37P)	2	BSS.369	C.	JF.1
		F.210826	Roller	2	S.80.B		JF.1
	12430	F.210827	Roller	1	S.80.B	C.	JF.1
		F.210533	Shaft, for rollers	1	S.80		JF.1
	8908	F.218647	Stop	1	L.65.C	C	JF.1
		B.218694	Bracket, stabiliser, port, group	1	—		
		B.218695	Bracket, stabiliser, starboard, group	1	—		
		A.220286	Bracket, for inflatable seal connection	1	S.510		JF.1
21	8911	F.220261	Bush, for inflatable seal connection	1	BS.1154-Z.13	C.	JF.1
	9948	F.233250	Bush, in stabiliser bracket	4	BSS.369	C.	JF.1
21	12875	F.220288	Coupling, for inflatable seal	1	L.65.C	C.	JF.1
	12876	A.220285	Connector, for inflatable seal	1	L.65.C	C.	JF.1
		D.219122	Door, hinged, aft of hood, group	1	—		JF.1
		A.218681	Bracket, hinge, port	1	—		JF.1
		A.218682	Bracket, hinge, starboard	1	—		JF.1
	12978	F 218692	Fitting, special	1	S.96.B	C.	
		A.218706	Fitting, for roller, group	1	—		
	9972	STS.487/25E	Bolt, securing, roller	1	DTD.487	C.	JF.1
		F.213942	Piece, distance, for roller	1	BSS.369		JF.1
		F.220248	Roller	1	DTD.487		JF.1
		F.218787	Link	1	L.72		

FUSELAGE—HOOD AND WINDSCREEN

Ref. No.	Part No.	Description (1 2 3 4 5)	No. Off	Material Specification	M.R. Class of Store	Plate No.
	C.218776	Mounting, for inflatable seal, group (Mod. 789).	1	—		
10208	F.233581	Lever, actuating bar	1	S.521	C.	
	F.232246	Plate, tapped	1	L.72		
	F.219198	Packing	2	L.72		
8909	F.210448	Piece, distance	4	BSS.369	C.	JF.1
8910	F.210446	Roller	4	S.80.B	C.	JF.1
8913	A.127044	Spring, for hinged door	4	—	C.	JF.1
	F 231996	Bolt, special	4	S.99.B		JF 1
	F.217912	Bush, for spigot bolts	36	Neoprene		
	F.232056	Door, at rear hook, port and starboard	2	L.72		JF.1
	A.217899	Hook, front, port and starboard	2	S.99		JF.1
	A.231994	Hook, rear, port and starboard	2	S.99		JF.1
21	C.218812	Member, front arch	1	—		
21	C.218812/3	Angle, attachment	1	—		JF.1
21	D.218977	Member, rear arch	1	—		
21	D.218977/3	Angle, attachment	1	—		JF.1
21	D.218977/4	Angle, attachment	1	—		JF.1
21	D.218977/7	Strip, attachment	1	—		JF.1
21	D.218977/8	Strip, attachment	1	—		JF.1
7009	Std.1511/C	Nut	36	—	C.	4
21 8914‡	D.218935	Seal, inflatable (less holes)	1	Rubber	B.	JF 1
12773	F.232701	Shim, aft, port and starboard (Mod. 778)	2	—	C.	
	F 211030	Shim, centre, port and starboard (attach loosely to hood)	2	—		
	F.230877	Shim, forward, port and starboard (Mod. 778)	4 (max.)	—		
	F.231995	Shim, at rear hook, port and starboard	10	S.510		
	F.232019	Shim, at rear hook, port and starboard (Alternative to F.231995)	2	S.510		
	A.230873	Spigot, forward, port (Mod. 778)	1	L.65.C		
	A.230874	Spigot, forward, starboard (Mod. 778)	1	L.65.C		
	A.230875	Spigot, rear, port (Mod. 778)	1	L.65.C		
	A.230876	Spigot, rear, starboard (Mod. 778)	1	L.65.C		
8915	B.219204	Strip, seal attachment, port	1	L.72	C.	JF.1
8916	B.219205	Strip, seal attachment, starboard	1	L 72	C.	JF.1
8917	A.219213	Strip, seal attachment	1	L.72	C.	JF.1
10737	C.233784	Spray, hood, port, group (Mod. 803)	1	—	B.	JF.1
	A.220225	Elbow	1	—		JF.1
	F 211474	Plate, stud	1	—		
10036	A.233773	Slide, group (Mod. 803)	1	S.520	C.	JF.1
	F.233774	Knob	1	Nylon Bar		
	Std.1507/2/016	Tube, distance	2	T.26 or DTD.432.S		4
10736	C.233785	Spray, hood, starboard, group	1	—	B.	JF.1
13131	A.220226	Elbow	1	—	C.	JF.1
	F.211474	Plate, stud	1	—		
10036	A.233773	Slide, group	1	S.520	C.	JF 1
	F.233774	Knob	1	Nylon Bar		
	Std.1507/2/016	Tube, distance	2	T 26		4
9973	Std 1935/G/D	Nut on plug end, internal tube (Mod. 806)	1	DTD.487	C.	JF 1
13104	F 210034	Plate, bearing	1	S.80.B	C.	
9965	F 233298	Plate, strut attachment (Mod 806)	1	L.72	C.	JF.1
9966	F.231515	Plug end, for external tube (Mod. 806)	1	L.65.C	C.	JF 1
9967	F 231516	Plug end, for internal tube (Mod. 806)	1	DTD.498	C.	JF 1
21 10990	F.210035	Shim	1	Brass	C.	
9962	F.231524	Spring, for internal tube (Mod. 806)	1	Sp. St.	C.	JF 1
9960	A.231511	Strut (Mod. 806)	1	L.65 C	C.	JF 1
9963	F 231517	Trunnion, at internal attachment tube (Mod 806)	1	DTD.498	C.	JF.1
9961	A 231512	Tube, external (Mod. 806)	1	—	C.	JF.1

FUSELAGE—HOOD AND WINDSCREEN

Ref. No.	Part No.	Description (1 2 3 4 5)	No. Off	Material Specification	M.R. Class of Store	Plate No.
9964	F.231513	Tube, internal (Mod. 806)	1	—	C.	JF.1
—	Std.1547/22/12	Washer, packing (Make from 30B/9611213, 1/2" x 1/2")	2	L.72	—	4
1327	Std.1547/24/12	Washer, packing	2	DTD.610	C.	4
	E.219184	Windscreen, group	1	—		
10942	Std.1553/C/20	Bolt, securing clamp	10	S.99.B	C.	5
9334	F.221988	Bolt, special, at sling attachment point	2	S.95.B	C.	JF.2
11065	F.211028	Nut, special	6	S.94.B	C.	
9444	F.223709	Bolt, special, for fairing	2	S.96.	C.	JF.2
8918	F.221543	Bolt, special, for front light attachment	8	S.96.B	C.	JF.2
8919	F.219809	Bolt, special, for quarter light	14	S.95.B	C.	JF.2
9333	F.222515	Bracket, retaining	8	L.65.C	C.	JF.2
8921	A.219573	Clamp	1	—	C.	JF.2
8922	B.219574	Clamp, for front light, port	1	—	C.	JF.2
8923	B.219575	Clamp, for front light, starboard	1	—	C.	JF.2
8924	A.219596	Clamp	1	—	C.	JF.2
8925	C.219667	Clamp, angle, bottom, port	1	—	C.	JF.2
8926	C.219668	Clamp, angle, bottom, starboard	1	—	C.	JF.2
8927	B.219716	Clamp, angle, rear	2	—	C.	JF.2
8928	C.219771	Clamp, angle, top, port	1	—	C.	JF.2
8929	C.219772	Clamp, angle, top, starboard	1	—	C.	JF.2
8930	C.221642	Clamp, side, port	1	—	C.	JF.2
8931	C.221643	Clamp, side, starboard	1	—	C.	JF.2
8932	F.219810	Clamp	10	S.1.B	C	JF.2
9750	F.227552	Clamp	2	S.1	C.	JF.2
9340	C.222974	Fairing, port, for windscreen front light	1	—	C.	JF.2
9341	C.222975	Fairing, starboard, for windscreen front light	1	—	C.	JF.2
8933	F.219607	Ferrule	10	S.95.B	C.	JF.2
8934	F.219608	Ferrule	10	S.95.B	C.	JF.2
9751	F.227570	Ferrule, for bolt securing clamp	2	S.95.B	C.	JF.2
	E.219590	Frame, windscreen, group	1	—		JF.2
	C.219594	Beam, centre	1	L.65.C		JF.2
	F.210780	Bush, threaded	2	S.95.B		
	D.219612	MEMBER, ARCH, ASSEMBLY	—	—		
	C.219399	Bracket, corner, port	1	L.65.C		JF.2
	C.219400	Bracket, corner, starboard	1	L.65.C		JF.2
	D.219595	Bracket, centre	1	L.65.C		JF.2
	D.219826	Member, arch, centre portion	1	S.96.B		JF.2
	D.219827	Member, arch, side, port	1	S.96.B		JF.2
	D.219828	Member, arch, side, starboard	1	S.96.B		JF.2
8936	Std.2013.G	Nut, barrel	2	M.T. Steel	C.	
8937	Std.2013.C	Nut, barrel	10	S.112	C.	
9443	F.223312	Nut, barrel	2	S.112	C.	
	F.217994	Nut, countersunk	2	S.95.B		
	C.219438	Strip, sealing	1	L.65.C		JF.2
9335	Std.1547/19/6	Washer, profile	5	DTD.610	C.	4
	D.219738	MEMBERS, FRONT AND EDGE, ASSEMBLY	—	—		
	D.219664	Member, bottom edge, port, group	1	—		JF.2
	F.231380	Bush, threaded	2	S.99.B & I.C.I.A.100		
	D.219665	Member, bottom edge, starboard, group	1	—		JF 2
	F.231380	Bush, threaded	2	A.99.B & I.C.I.A.100		

FUSELAGE—HOOD AND WINDSCREEN

Ref. No.	Part No.	Description (1 2 3 4 5)	No. Off	Material Specification	M.R. Class of Store	Plate No.
	E.220581	Member, front, port	1	—		JF.2
	E.220582	Member, front, starboard	1	—		JF.2
	E.219741	Member, top edge, port	1	—		JF.2
	E.219742	Member, top edge, starboard	1	—		JF.2
8935	Std.2012.C	Nut, barrel	12	BSS.250.B	C.	
7965	Std.2079.C	Nut, barrel	2	Nylon	C.	
	F.217994	Nut, countersunk	2	S.95.B		
8935	Std.2012.C	Nut, barrel	12	BSS.250	C.	
9765	Std.2079/C	Nut, barrel	39	Nylon	C.	
	Std.2013/E	Nut, barrel	2	—		
	F.217994	Nut, countersunk	5	S.95.B		
9335	Std.1547/19/6	Washer, profile	6	DTD.610	C.	4
11092	D.260145	Front, light, port, group (Mod. D.1172)	1	—	A.	
8611	D.219295	Front, light, port, group (Pre Mod. 1172)	1	—	A.	JF.2
1523	F.173856	Banjo	1	DTD.364	C.	JF.2
1524	F.173857	Bolt, banjo	1	DTD.364	C.	JF.2
8510	Triplex A.5500	Drier, air	1	—	B.	
1526	F.191042	Washer	2	Rubber	C.	JF.2
4984	Std.914.G22	Washer	1	DTD.610	C.	4
23 32C/1275031	—	Tube, 9/16" o/d. x 3/16" i/D. x 27" long (D.219295/5)	1	DTD.625.A	C.	
11093	D.260146	Front, light, starboard, group (Mod. 1172)	1	—	A.	
8612	D.219296*	Front, light, starboard, group (Pre Mod. 1172)	1	—	A.	JF.2
1523	F.173856	Banjo	1	DTD.364	C.	JF.2
1524	F.173857	Bolt, banjo	1	DTD.364	C.	JF.2
8510	Triplex A.5500	Drier, air	1	—	B.	
1526	F.191042	Washer	2	Rubber	C.	JF.2
4984	Std.914/G22	Washer	1	DTD.610	C.	4
32C/509	—	Tube 9/16" o/d x 3/16" i/d. x 24" long (D.210296/3)	1	DTD.625.A	C.	
2144	Std.1231/3	Lug, locking	1	—	C.	4
9752	Std.2080/C	Nut, barrel	4	M.T.Steel	C.	
8613	C.219279	Quarterlight, port	1	D.Mat ZB/3/014 -5/67	C.	JF.2
8614	C.219280	Quarterlight, starboard	1	D.Mat ZB/3/014 -5/67	C.	JF.2
8938	F.219889	Screw, adjusting	10	S.96.B	C.	JF.2
9763	F.229456	Screw, adjusting	2	S.96.B	C.	JF.2
8939	F.218465	Seal, for front light clamp screws	8	Rubber	C.	JF.2
9789	C.230419	Seal, for front panel, port	1	Neoprene	C.	JF.2
9790	C.230420	Seal, for front panel, starboard	1	Neoprene	C.	JF.2
9791	C.230421	Seal, for quarterlight, port	1	Neoprene	C.	JF.2
9792	C.230422	Seal, for quarterlight, starboard	1	Neoprene	C.	JF.2
9754	Std.2008/C/070	Strop, locking	12	S.84	C.	
9332	F.222516	Washer, serrated, retaining cam	8	Rubber	C.	JF.2
9335	Std.1547/19/6	Washer, profile (Mod. 803)	2	DTD.610	C.	

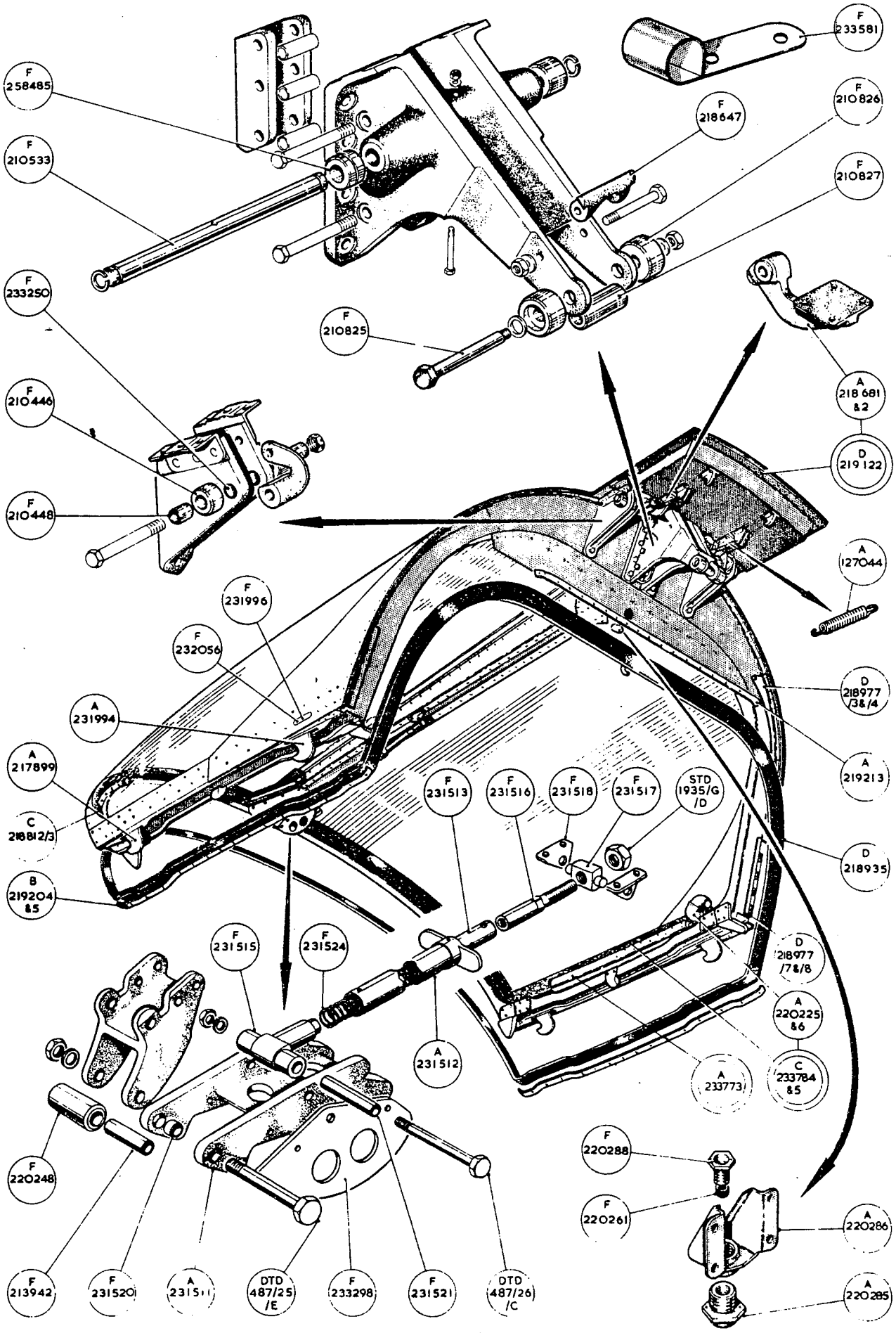
F 233581
F 258485
F 210826
F 218647
F 210533
F 210827
F 233250
F 210825
A 218681 &2
F 210446
D 219122
F 210448
A 127044
F 231996
F 232056
D 218977 /3&/4
A 231994
A 219213
A 217899
F 231513
F 231516
F 231518
F 231517
STD 1935/G /D
C 218812/3
D 218935
B 219204 &5
F 231515
F 231524
D 218977 /7&/8
A 220225 &6
A 231512
A 233773
C 233784 &5
F 220288
F 220248
F 220261
A 220286
F 213942
F 231520
A 231511
DTD 487/25 /E
F 233298
F 231521
DTD 487/26 /C
A 220285

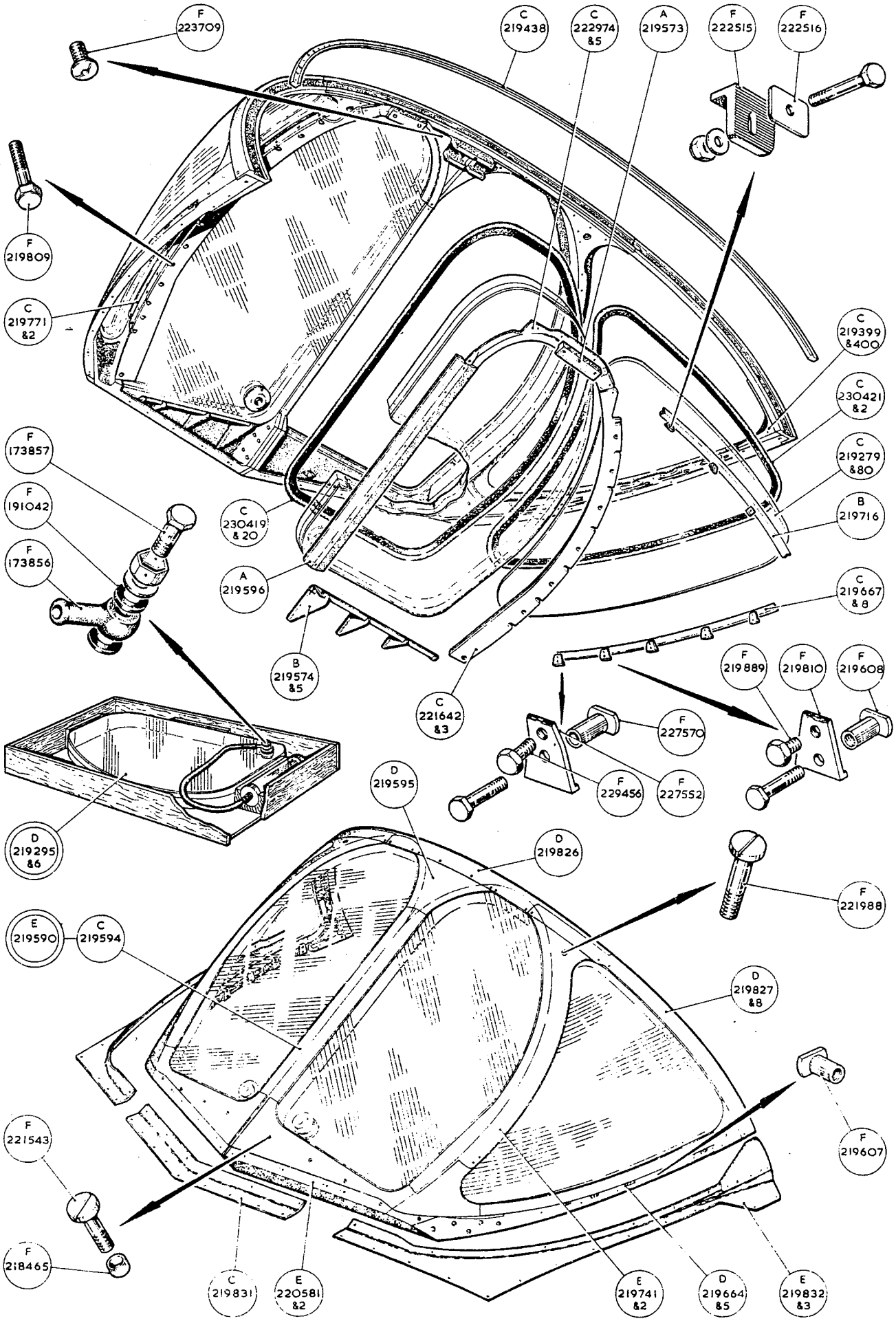
F 223709
C 219438
C 222974 &5
A 219573
F 222515
F 222516
F 219809
C 219771 &2
C 219399 &400
C 230421 &2
C 219279 &80
B 219716
F 173857
F 191042
F 173856
C 230419 &20
A 219596
C 219667 &8
B 219574 &5
C 221642 &3
F 219889
F 219810
F 219608
F 227570
F 229456
F 227552
D 219595
D 219295 &6
D 219826
F 221988
E 219590
C 219594
D 219827 &8
F 221543
F 219607
F 218465
C 219831
E 220581 &2
E 219741 &2
D 219664 &5
E 219832 &3

This file was downloaded
from the RTFM Library.

Link: www.scottbouch.com/rtfm

Please see site for usage terms,
and more aircraft documents.