SERVICES - FUEL SYSTEM CENTRE FUSELAGE

	Ref. No.	Part No.	Description (1 2 3 4 5)	No. Off	Material Specification	M.R. Class of Store	Plate No.
		E.200270	FUEL SYSTEM IN CENTRE FUSELAGE, ASSEMBLY	–	–		
	6520	A.202469	Adaptor	1	L.65.C	C.	NB.3
	8036	A.206119	Adaptor	2	L.65.C	C.	NB.1
	27FS/3042043	Saunders 42.A.10	Aerocock, defuelling, S.P., type 42	1	–	A.	
23	27FS/4524136	Saunders L51.B12	Aerocock, low pressure S.P., Mk. 2, group	1	–	A.	
23	27F/4524143	Saunders 5112/5	Ring, sealing	2	–	C.	
	10696	F.250214	Bolt, special, for defuelling cowl latch (Mod. 1031)	1	S.95	C.	
	1060	F.189375	Block, clamp, half, for refuelling pipe	1	LFS.21	C.	NB.1
	2122	F.196104	Block, clamp	2	LFS.21	C.	
	2123	F.196105	Block, clamp	2	LFS.21	C.	
	8286	A.211648	Block, saddle	2	LFS.21	MR/C	NB.2
	1088	A.189332	Bolt, banjo	2	S.95	C.	NB.1
	4055	F.196287	Bracket, support, for engine supply pipe	1	S.3	C.	
		B.203777	BRACKET, MOUNTING FOR PRESSURE RELIEF VALVE, ASSEMBLY	–	–		
	5391	A.203759	Bracket, mounting, for pressure relief valve, port	1	S.3	MR/C	NB.3
	5392	A.203760	Bracket, mounting, for pressure relief valve, starboard	1	S.3	MR/C	NB.3
	5057	F.203591	Cap, for pressure relief valve mounting bracket	2	S.3	C.	NB.3
	8287	A.211719	Bracket, mounting	1	L.72	MR/C	NB.2
	9715	F.215817	Bracket, mounting, for clamp blocks	1	L.72	C.	
		A.218113	Bracket, mounting, for pressure reducing valve, port	1	S.3		
		A.218114	Bracket, mounting, for pressure reducing valve, starboard	1	S.3		
		A.223430	Bracket, support frame 19	2	L.72		
	1087	F.185874	Circlip	2	DTD.215	C.	NB.1
	421	A.185593	Clamp, pipe connection, group	2	–	B.	NB.1
	2723	F.184931	Bolt, eye	1	S.94.B	C.	NB.1
	6526	F.213079	Nut, special	1	S.95	C.	NB.1
	2724	F.185592	Washer	1	DTD.364	C.	NB.1
	1085	A.185870	Clamp, pipe connection, group	2	–	B.	NB.1
	2723	F.184931	Bolt, eye	1	S.94.B	C.	NB.1
	6526	F.213079	Nut, special	1	S.95	C.	NB.1
		F.184938	Washer	1	DTD.364		NB.1
	1136	A.186450	Clamp, pipe connection, group	1	–	B.	NB.1
	2723	F.184931	Bolt, eye	1	S.94.B	C.	NB.1
	6526	F.213079	Nut, special	1	S.96	C.	NB.1
	2724	F.185592	Washer	1	DTD.364	C.	NB.1
	6525	A.201803	Clamp, pipe connection, group	1	–	B.	
	2723	F.184931	Bolt, eye	1	S.94.B	C.	NB.1
	6526	F.213079	Nut, special	1	S.96	C.	NB.1
	2724	F.185592	Washer	1	DTD.364	C.	NB.1
	8288	F.211593	Cleat (Mod. 374)	1	LFS.21	MR/C	
	8289	F.211594	Cleat (Mod. 374)	1	LFS.21	MR/C	
	11227	Std.2045/21/24	Clip, sleeved	1	–	C.	6
	26VA/6041262	Std.2046/19/24	Clip, sleeved	2	–	C.	6
	11793	Std.2046/38/22	Clip, sleeved	1	–	C.	6
	11405	Std.2046/59/20	Clip, sleeved	2	–	C.	6
	26VA/6044412	Std.2045/17/26	Clip, sleeved	4	–	C.	6
	3747	Std.841/28	Clip, 7/16" wide x 22 s.w.g. x 2.8" long	2	DTD.610	MR/C	4
	3756	Std.850/27	Clip, 7/16" wide x 22 s.w.g. x 2.7" long	1	DTD.610	MR/C	4
	4739	Std.850/37	Clip, 7/16" wide x 22 s.w.g. x 3.7" long	2	DTD.610	MR/C	4
	4164	Std.850/50	Clip, 7/16" wide x 22 s.w.g. x 5.0" long	2	DTD.610	C.	4
	4050	Std.851/53	Clip, 7/16" wide x 22 s.w.g. x 5.3" long	1	DTD.610	C.	4
	5412	Std.853/30	Clip, 7/16" wide x 22 s.w.g. x 3.0" long	1	S.3	MR/C	4

SERVICES—FUEL SYSTEM CENTRE FUSELAGE

Ref. No.	Part No.	Description (1 2 3 4 5)	No. Off	Material Specification	M.R. Class of Store	Place No.
5413	Std.853/36	Clip, 7/16" wide x 22 S.W.G. x 3.6" long	1	S.3	MR/C	4
2151	Std.1166/6	Clip, half, for clamp	1	S.511 & T.26	C.	4
8552	F.218115	Clip, for pressure reducing valve mounting bracket	2	—	C.	
8285	A.211647	Clip, at fuel pressure switch mounting	2	DTD.166	MR/C	NB.2
1086	F.185873	Collar, half	4	DTD.364	C.	NB.1
1729	A.192904	Connection, tank pressurising, group	1	—	B.	NB.2
1730	A.193370	Cap, blanking	1	DTD.364	C.	NB.2
	A.192905	Connection	1	DTD.362		
	A.184691	Guide, valve	1	DTD.364		
1731	F.193381	Ring, sealing, for blanking cap	1	Rubber	C.	NB.2
3976	F.197676	Ring, retaining, for blanking cap	1	—	C.	NB.2
5330-99-8043262	Dowty GD.1307H	Seal, bonded	1	—	C.	
1732	F.184693	Spring	1	DTD.315	C.	NB.2
1733	F.184692	Valve	1	DTD.364	C.	NB.2
27FR/1056586	Flight Refuelling F.R.S.110J	Connector, pipe, 1-1/4" B.S.P.	1	—	B.	
27FR/1057698	Flight Refuelling F.R.S.110K	Connector, pipe, 1-1/2" B.S.P.	4	—	B.	
3776	Std.1306/J/20	Coupling, flexible (Make from 32C/447)	4	DTD.625	MR/C	4
1120	K.A.C.C.3829/S	Coupling, flexible, 1-1/4" B.S.P. (Alternative to C.6397)	1	—	B.	
6970	K.A.C.C.6397	Coupling, flexible, 1-1/4" B.S.P. (Alternative to C.3829/S)	1	—	B.	
3898	K.A.C.C.4460/S	Coupling, flexible, 1-1/4" B.S.P. (Alternative to C.6395)	1	—	B.	
6972	K.A.C.C.6395	Coupling, flexible, 1-1/4" B.S.P. (Alternative to C.4460/S)	1	—	B.	
27FR/4677550	Flight Refuelling C.0724000&1	Coupling, refuelling (Alternative to FC.110 or FC.110 Mk. 2)	1	—	A.	
4 27F/	Avery Hardoll FC.110	Coupling, refuelling (Alternative to C.0724000/1 or FC.110 Mk. 2)	1		A.	
4 27F/6457327	Avery Hardoll FC.110 Mk. 2	Coupling, refuelling (Alternative to C.0724000/1 or FC.110)	1	—	A.	
5061	F.201433	Fairlead, half	4	LFS.21	C.	NB.3
5062	F.201193	Fairlead, half	1	Ferobestos	C.	NB.3
5063	F.201194	Fairlead, half	1	—	C.	NB.3
5064	F.204252	Fairlead, half	1	—	C.	NB.1
5065	F.204253	Fairlead, half	1	—	C.	NB.1
4 8582	B.218125	Filter, air (27VA/4943 Lagged) (Pre Mod. 1057)	2	—	A.	NB.1
27VC/6477426	Palmer D.10721	Filter, air (Mod. 1057)	1	—	A.	
27F/4526697	Rotol FFP.2/2	Flow proportioner	1	—	A.	
27FS/9128855	Saunders A.102/3	Handle, for defuelling cock	1	—	C.	
4093	B.199331	Hose, flexible metallic (Pre Mod. 541)	1	—	C.	NB.1
8384	B.213266	Hose, metallic (Avica Equipment Ltd.) (Mod. 541) (Alternative to B.230427)	1	—	C.	
9700	B.230427	Hose, metallic (Alternative to B.213266)	1	—	C.	
2852	F.189214	Label, instruction, for fuelling cock	1	DTD.610	MR/C	
12217	F.231625	Label, instruction, for L.P. cock	1	—	C.	
10697	A.250121	Latch, for de-fuelling cock (Mod. 1031)	1	Nylon	C.	
1940	Std.1231/1	Lug, locking, at water/sediment drain	2	S.3	C.	4
	B.190411	MOUNTING, FOR REFUELLING COUPLING, ASSEMBLY	—	—		
1061	C.189254	Mounting	1	—	C.	NB.1

SERVICES—FUEL SYSTEM CENTRE FUSELAGE

	Ref. No.	Part No.	1	2	3	4	5	Description	No. Off	Material Specification	M.R. Class of Store	Plate No.
	1135	C.188535/A		Mounting, for L.P. cock					1	—	B.	NB.2
								Consisting of:—				
		A.188539			Angle				—	DTD.610		
		B.188537			Bracket, top				1	DTD.610		
		A.188784			Member, side, forward				1	DTD.610		
		B.188536			Member, side rear				1	DTD.610		
		A.188538			Stiffener				1	DTD.610		
23	28D/1011028	A25.34C			Bolt				2	—	C.	
23	28D/1212404	A25.35C			Bolt				2	—	C.	
23	28M/9433473	AGS.2002.C1			Nut				4	—	C.	
23	28Q/9455169	SP.78-405			Rivet				12	—	C.	
	28W/12296	SP.15C			Washer				4	—	C.	
		C.206107		MOUNTING, FOR FLOW PROPORTIONER, ASSEMBLY					—	—		
	6533	F.205949			Bolt				1	—	C.	NB.3
	8035	A.206118			Bracket, support				1	—	C.	NB.3
	8034	F.202967			Link				2	L.72	C.	NB.3
	5066	F.200156		Nipple					1	S.1	C.	
	12667	F.200157		Nipple					1	S.1	C.	
	4127	F.198948		Nipple					2	S.1	C.	
	1082	F.188057		Nipple					2	S.1	C.	
	3897	F.195770		Nipple					1	S.1	C.	
	5067	F.190837		Nut, retaining, at vapour release connection on forward tanks					2	DTD.364	C.	NB.3
	5068	B.207420		Pipe, refuelling, coupling to fuselage connection					1	DTD.253	C.	NB.1
	8033	B.206113		Pipe, refuelling, front tanks branch					1	DTD.253	B.	NB.1
	9661	C.226407		Pipe, to port front tank valve					1	DTD.253	B.	NB.1
	1109	C.187805		Pipe, refuelling, branch to starboard front tank valve					1	DTD.253	C.	NB.1
	8030	B.206111		Pipe, port pump to flow proportioner					1	DTD.253	B.	
	8031	B.206112		Pipe, starboard pump to flow proportioner					1	DTD.253	B.	
	9023	C.215987		Pipe, delivery from flow proportioner					1	DTD.253	B.	NB.1
	11075	A.251082		Pipe, link (Mod. 1057)					2	DTD.253	C.	
	9022	A.212114		Pipe, L.P. cock to flexible coupling					1	DTD.253	C.	NB.1
	1140	C.186618		Pipe, refuelling, rear tank valve, port					1	DTD.253	C.	
	1141	C.186668		Pipe, refuelling, rear tank valve, starboard					1	DTD.253	C.	
	1146	C.187697		Pipe, refuelling, gallery					1	DTD.253	C.	
	5069	B.201185		Pipe, vent, front tank branch					1	DTD.253	C.	NB.1
	6174	B.210520		Pipe, vent, connection to branch pipe					1	DTD.253	C.	NB.1
	5071	B.204146		Pipe, branch, from vapour release valve					1	DTD.253	C.	NB.1
	5072	B.201082		Pipe, pressure, branch, relief and non-return valves to connection, port					1	DTD.253	C.	NB.1
	5073	B.201083		Pipe, pressure, branch, relief and non-return valves to connection, starboard					1	DTD.253	C.	NB.1
	5074	B.201122		Pipe, pressure, frame 26 to frame 30 (Pre Mod. 1057)					1	DTD.253	C.	NB.1
	11074	B.251080		Pipe, air, frame 33 to frame 36 (Mod. 1057)					1	DTD.253	C.	
	5075	B.200688		Pipe, pressure, branch					1	DTD.253	C.	NB.1
	5076	C.201107		Pipe, vent, branch, connection to atmosphere					1	DTD.253	B.	
	5087	C.200374		Pipe, fuel transfer, connector to rear tank, port					1	DTD.253	B.	NB.1
	5088	C.200375		Pipe, fuel transfer, connector to rear tank, starboard					1	DTD.253	B.	NB.1
	8549	B.218179		Pipe, pressure (B.201109 lagged), branch from filter					1	—	B.	NB.1
	5092	D.201248		Pipe, fuel transfer, non-return valve to front tank, port					1	DTD.253	B.	NB.1
	5093	D.201249		Pipe, fuel transfer, non-return valve to front tank, starboard					1	DTD.253	B.	NB.1

SERVICES—FUEL SYSTEM CENTRE FUSELAGE

Ref. No.	Part No.	Description (1 2 3 4 5)	No. Off	Material Specification	M.R. Class of Store	Plate No.
8551	B.218191	Pipe, pressure (B.201042/7 lagged), filter to pressure reducing valve, port	1	—	B.	
8550	B.218190	Pipe, pressure (B.201042/8 lagged), filter to pressure reducing valve, starboard	1	—	B.	NB.1
5098	C.201151	Pipe, refuelling, branch	1	DTD.253	B.	NB.1
8522	F.216519	Pipe, vent extension	1	—	C.	
8387	B.213220	Pipe, metallic hose to connection (Mod. 541)	1	DTD.253	C.	
1103	C.188051/5	Pipe, transfer, rear tank to non-return valve, port	1	DTD.253	C.	NB.1
1104	C.188051/6	Pipe, transfer, rear tank to non-return valve, starboard	1	DTD.253	C.	NB.1
1108	C.188051/10	Pipe, engine supply, flexible connection to flexible connection	1	DTD.253	C.	NB.1
1112	C.188051/13	Pipe, engine supply, rear spar to L.P. fuel cock	1	DTD.253	C.	NB.1
4959	C.188051/18	Pipe, engine supply, connection to rear spar	1	DTD.253	C.	NB.1
1114 †	B.188908/1	Pipe, drain, tank pump to drain valve, port	1	DTD.253	C.	NB.1
1116 †	B.188908/3	Pipe, drain, transfer pipe to drain valve, port	1	DTD.253	C.	NB.1
1117 †	B.188908/4	Pipe, drain, transfer pipe to drain valve, starboard	1	DTD.253	C.	NB.1
8143 †	B.188908/5	Pipe, drain, rear tank, port	1	T.9	C.	
8144 †	B.188908/6	Pipe, drain, rear tank, starboard	1	T.9	C.	
1118 †	B.188908/7	Pipe, drain, for tank pump, port	1	T.9	C.	NB.1
1119 †	B.188908/8	Pipe, drain, for tank pump, starboard	1	T.9	C.	NB.1
†	B.188908/10	Pipe, pressure switch balance, port	1	DTD.253		NB.1
†	B.188908/11	Pipe, pressure switch balance, starboard	1	DTD.253		NB.1
6089 †	B.188908/12	Pipe, drain, tank pump to drain valve, starboard	1	DTD.253	C.	NB.1
13266	F.230464	Pipe, drain, pressure, switch balance	1	DTD.253	C.	
5086	B.200361/12	Pipe, pressure, relief valve to branch, starboard	1	DTD.253	C.	
5085	B.200361/15	Pipe, pressure, relief valve to branch, port	1	DTD.253	C.	NB.1
5094	B.201042/1	Pipe, pressure, connection to branch	1	DTD.253	C.	NB.1
5095	B.201042/2	Pipe, pressure, branch to connection (Pre Mod. 1057)	1	DTD.253	C.	NB.1
11076	A.251081	Pipe, branch (Mod. 1057)	1	DTD.253	C.	
6176	B.201042/9	Pipe, fuel, reducing valve to non-return valve, port	1	DTD.253	C.	
6177	B.201042/10	Pipe, fuel, reducing valve to non-return valve, starboard	1	DTD.253	C.	
6180 †	B.201042/11	Pipe, balance, pressure reducing valve to tee-piece, port	1	DTD.253	C.	
6181 †	B.201042/12	Pipe, balance, pressure reducing valve to tee-piece, starboard	1	DTD.253	C.	
6182 †	B.201042/13	Pipe, drain, tee-piece to boss	1	DTD.253	C.	
†	B.201059/1	Pipe, balance, tee-piece to pressure relief valve, port	1	DTD.253		NB.1
†	B.201059/2	Pipe, balance, tee-piece to pressure relief valve, starboard	1	DTD.253		NB.1
†	B.201059/3	Pipe, balance, tee-piece to refuelling branch pipe	1	DTD.253		NB.1
8119 †	A.212212/1	Pipe, connection to union	1	DTD.253	C.	NB.1
8120 †	A.212212/2	Pipe, union to pressure switch	1	DTD.253	C.	NB.1
8121 †	A.212212/3	Pipe, connection to union	1	DTD.253	C.	NB.1
8122 †	A.212212/4	Pipe, union to pressure switch	1	DTD.253	C.	NB.1
1089	A.186267	Plate, cover, transfer pipe connector	2	DTD.610	C.	NB.3
3 5UE/4412534	SPE.1007 Mk. 3	Pump, fuel booster (Mod. 1103)	2	—	A.	—
3 5UE/6532	SPE.1007 Mk. 2	Pump, fuel booster (Mod. SPE.123) (Pre Mod. 1103)	2	—	A.	
5099	F.192028	Ring, sealing, at vapour release connection	2	Rubber	C.	
3 27QA/4534526	Dowty GD.1308/1	Ring, sealing, "O" type	5	—	C.	NB.1
3 27QA/4534527	Dowty GD.1308/2	Ring, sealing, "O" type	2	—	C.	
3 27QA/4534547	Dowty GD.1309/25	Ring, sealing, "O" type	1	—	C.	
3 27QA/4534548	Dowty GD.1309/26	Ring, sealing, at engine fuel inlet	1	—	C.	
3 27QA/4534549	Dowty GD.1309/27	Ring, sealing	5	—	C.	NB.1

† For details see Piping Chart

SERVICES—FUEL SYSTEM CENTRE FUSELAGE

	Ref. No.	Part No.	Description (1 2 3 4 5)	No. Off	Material Specification	M.R. Class of Store	Plate No.
	1132	F.173506	Screw, sealing, for tank retaining nuts	16	DTD.364	C.	
23	27QA/8013728	Dowty GD.1307/3	Seal, bonded	12	—	C.	
23	27QA/4534427	Dowty GD.1307/BB	Seal, bonded	4	—	C.	
23	27QA/8817064	Dowty GD.1307/J	Seal, bonded	2	—	C.	NB.1
	8037	A.206121	Sleeve	2	L.65.C	B.	NB.1
23	27FR/4692803	Flight Refuelling A.1111080	Sleeve, screwed	4	—	C.	
23	6A/4332846	—	Switch, pressure, Mk. 1E	3	—	B.	
23	5CW/4405069	Thermal Control TP.5266/1	Switch, pressure	2	—	A.	
		D.201703	TANKS, FORWARD INSTALLATION, ASSEMBLY	—	—	—	
23	6A/4337724	Smiths J.U.7	Box, terminal, contents gauge	2	—	B.	
	5101	B.190833	Connection, vapour release	2	DTD.364	C.	NB.3
	1186	B.181004	Connection, vent	2	DTD.364	C.	NB.3
	2144	Std.1231/3	Lug, locking	1	S.3	C.	4
	1127	F.181002	Plate, locking	4	DTD.610	C.	
	1124	A.169270	Plate, mounting, refuelling valve	2	DTD.610	C.	NB.2
	1125	F.170684	Piece, distance	8	DTD.364	C.	NB.2
23	5CW/4400028	Smiths 1696FG	Switch, fuel level	2	—	A.	
	—	—	Tanks (See section "Q")	—	—	—	
	9647	F.226366	Washer, sealing	2	22272/33/2/116334H	C.	NB.2
	9648	F.226367	Washer, sealing	2	22272/33/2/116334H	C.	NB.2
	1126	F.170685	Washer, special	8	DTD.610	C.	NB.2
		D.200071	TANKS, CENTRE INSTALLATION, ASSEMBLY	—	—	—	
23	6A/4337724	Smiths J.U.7	Box, terminal, contents gauge	2	—	B.	
	3756	Std.850/27	Clip, 7/16" wide x 22 s.w.g. x 2.7" long	2	DTD.610	MR/C	4
	2144	Std.1231/3	Lug, locking, at refuelling valve	2	S.3	C.	4
	5389	D.200072	Plate, blanking	2	L.72	C.	
	—	—	Tanks (See Section "Q")	—	—	—	
	8189	A.217428	Valve, suction relief, group	2	—	C.	NB.2
	6200	F.209640	Collar	1	DTD.364	C.	NB.2
	1882	F.195019	Plug	1	—	C.	NB.2
23	27QA/4534422	Dowty GD.1307/6	Seal	1	—	C.	
	6199	F.209155	Spring	1	—	C.	NB.2
	7050	F.215727	Valve	1	DTD.364	C.	NB.2
	9853	F.233349	Washer, sealing, at transfer head	2	DTD.762	C.	NB.3
	9854	F.233350	Washer, sealing, outer, for suction relief valve	2	DTD.762	C.	NB.2
		Std.1509/12/040	Tube, distance, 1/4" o/d x 20 s.w.g. x 0.40" long	4	T.4		4
	26VA/6039011	Std.1509/23/020	Tube, distance, 5/16" o/d x 17 s.w.g. x 0.20" long	1	T.4	C.	4
	11067	Std.1509/23/050	Tube, distance, 5/16" o/d x 17 s.w.g. x 0.50" long	4	T.4	C.	4
		Std.1509/24/022	Tube, distance, 3/8" o/d x 17 s.w.g. x 0.22" long	1	T.4		4
	1090	F.173383	Union, reducing	2	DTD.674	C.	NB.3
23	5UE/6408297	SPE/BP.26	Valve, inverted flight, Mk. 2	2	—	A.	
23	5UE/4407065	Self Priming Pump SPE.11645	Gasket, baseplate to tank	1	—	C.	
	5UE/4407053	Self Priming Pump SPE.10306	Gasket, pump to inverted flight valve	1	—	C.	
	1071	A.186567	Valve, non-return, group	2	—	B.	NB.2
	2144	Std.1231/3	Lug, locking	1	S.3	C.	4
	1072	F.185048	Pin	1	DTD.364	C.	NB.2
	1076	F.186616	Screw	10	—	C.	NB.2
	1073	F.171937	Spring	1	—	C.	NB.2

SERVICES—FUEL SYSTEM CENTRE FUSELAGE

Ref. No.	Part No.	Description (1 2 3 4 5)	No. Off	Material Specification	M.R. Class of Store	Plate No.
1074	A.186567/A	Valve, hinge group	1	—	C.	NB.2
		Consisting of:—				
	F.185046	Hinge	1	DTD.610		
	F.185047	Valve	1	DTD.364		
	F.186594	Washer (Make from 30B/1730, QR)	1	—	—	
27F/1455562	Saunders Valve 708AA/25B	Valve, non-return (Mod. 1325)	3	—	B.	
1075	F.185049	Washer, sealing	1	Klingerit	C.	NB.2
6981	B.214443	Valve, pressure relief (Pre Mod. 694)	2	—	A.	NB.3
9713	B.225865	Valve, pressure relief (Mod. 694)	2	—	A.	
	C.190832	Valve, vapour release, group	2	—		
11832	C.266331	Valve, vapour release, group (Mod. 1263)	2	—	A.	NB.3
	A.190835	Float, group	1	—		
5406	F.190839	Float	1	Cork	MR/C	NB.3
	Std.914/T/10	Washer	1	DTD.610		4
	F.190841	Pin	1	S.80.B		
5408	F.191984	Seal	1	Rubber	MR/C	NB.3
5409	F.204291	Spring	1	—	MR/C	NB.3
7973	F.215242	Valve	1	—	MR/C	
27FR/4385073	Flight Refuelling C.1112000/3	Valve, refuelling, Mk. 12	4	—	A.	
8583	B.218149	Valve, pressure reducing (Hymatic CS.51642 lagged)	2	—	A.	NB.1
8137	B.217334	Valve, suction and pressure, relief, group	2	—	A.	NB.2
428	F.184477	Adjuster, valve	1	DTD.364	C.	NB.2
429	A.184476	Cap, valve	1	DTD.364	C.	NB.2
430	F.184480	Collar	1	DTD.364	C.	NB.2
6200	F.209640	Collar	1	DTD.364	C.	NB.2
1882	F.195019	Plug	2	DTD.364	C.	NB.2
431	A.184478	Ring, cap	1	DTD.364	C.	NB.2
27QA/4534417	Dowty GD.1288	Ring, sealing	1	—	C.	
27QA/4534531	Dowty GD.1308/8	Ring, sealing, "O" type	1	—	C.	
432	F.184482	Screw	6	—	C.	NB.2
27QA/4534422	Dowty GD.1307/6	Seal, bonded	2	—	C.	
27QA/4534424	Dowty GD.1307/23	Seal, bonded	1	—	C.	NB.2
434	F.184473	Seat, valve	1	DTD.364	C.	NB.2
1068	F.185613	Spring	1	DTD.239	C.	NB.2
6199	F.209155	Spring	1	—	C.	NB.2
441	A.184484	Valve	1	DTD.364	C.	NB.2
7050	F.215727	Valve	1	DTD.364	C.	NB.2
4666	F.201931	Washer	1	DTD.610	C.	NB.2
9656	A.226378	Washer, sealing, at refuelling valve	4	DTD.1177 & L.72	C.	NB.2
9649	F.226368	Washer, sealing, transfer pipe to tank	2	DTD.1177 & L.72	C.	NB.2
	Std.1547/26/16	Washer, profile	2	DTD.610		4
9658	A.226378	Washer, sealing, at cover plate	2	DTD.1177 & L.72	C.	NB.3
10144	F.234309	Washer, at refuelling valve (AS.830/57)	4	Gayco E75 or DTD.560.B	C.	NB.2
446	F.186084	Washer, sealing, for vent pipe outlet	2	Klingerit	C.	NB.3
9852	F.233348	Washer, sealing, for transfer pipe	2	DTD.1177 & L.72	C.	NB.3
9853	F.233349	Washer, sealing, for transfer pipe	2	DTD.1177 & L.72	C.	NB.3

SERVICES—FUEL SYSTEM CENTRE FUSELAGE

	Ref. No.	Part No.	Description (1 2 3 4 5)	No. Off	Material Specification	M.R. Class of Store	Plate No.
		B.208248	WING FUSELAGE CONNECTIONS, ASSEMBLY	—	—		
	8131	F.207610	Bolt, special, for branch pipes	12	—	C.	
	421	A.185593	Clamp, pipe connection, group	2	—	B.	NB.1
	2723	F.184931	Bolt, eye	1	S.94.B	C.	NB.1
	6526	F.213079	Nut, special	1	S.95	C.	NB.1
	2724	F.185592	Washer	1	DTD.364	C.	NB.1
	5059	A.186451	Clamp, pipe connection, group	2	—	B.	
	2723	F.184931	Bolt, eye	1	S.94.B	C.	NB.1
	6526	F.213079	Nut, special	1	S.95	C.	NB.1
	2724	F.185592	Washer	1	DTD.364	C.	NB.1
23	27FR/1056586	Flight Refuelling FRS.110J	Connector, pipe, 1-1/4" B.S.P.	2	—	B.	
	27FR/1056588	Flight Refuelling FRS.110L	Connector, pipe, 1-3/4" B.S.P.	4	—	B.	
	6162	B.209227	Pipe, fuel transfer branch, port	1	DTD.253	C.	NB.1
	6163	B.209228	Pipe, fuel transfer branch, starboard	1	DTD.253	C.	NB.1
	6094	A.208096	Pipe, stub, port and starboard	2	—	C.	NB.1
	5077	B.200361/1	Pipe, fuel transfer, port	1	DTD.253	C.	NB.1
	5078	B.200361/2	Pipe, fuel transfer, starboard	1	DTD.253	C.	
	5083	B.200361/9	Pipe, pressure, connection to connection, port	1	DTD.253	C.	NB.1
	5084	B.200361/10	Pipe, pressure, connection to connection, starboard	1	DTD.253	C.	
	6164	B.200361/16	Pipe, branch to relief valve, starboard	1	DTD.253	C.	
	6165	B.200361/17	Pipe, branch to relief valve, port	1	DTD.253	C.	NB.1
23	27QA/4534527	Dowty GD.1308/2	Ring, sealing	4	—	C.	
23	27QA/4534545	Dowty GD.1309/21	Ring, sealing	2	—	C.	
	1706	Std.1703/6/C	Screw	8	S.95.B	C.	5
	8129	B.211551	Valve, refuelling, pressure relief, group	2	—	B.	NB.3
	8186	F.209643	Spring	1	DTD.239	C.	NB.3
		F.199296	Valve, assembly	1	—		
	11784	F.199297	Washer	1	DTD.364	C.	

SERVICES—FUEL SYSTEM CENTRE FUSELAGE

Ref. No.	Part No.	1	2	3	4	5	Description	No. Off	Material Specification	M.R. Class of Store	Place No.

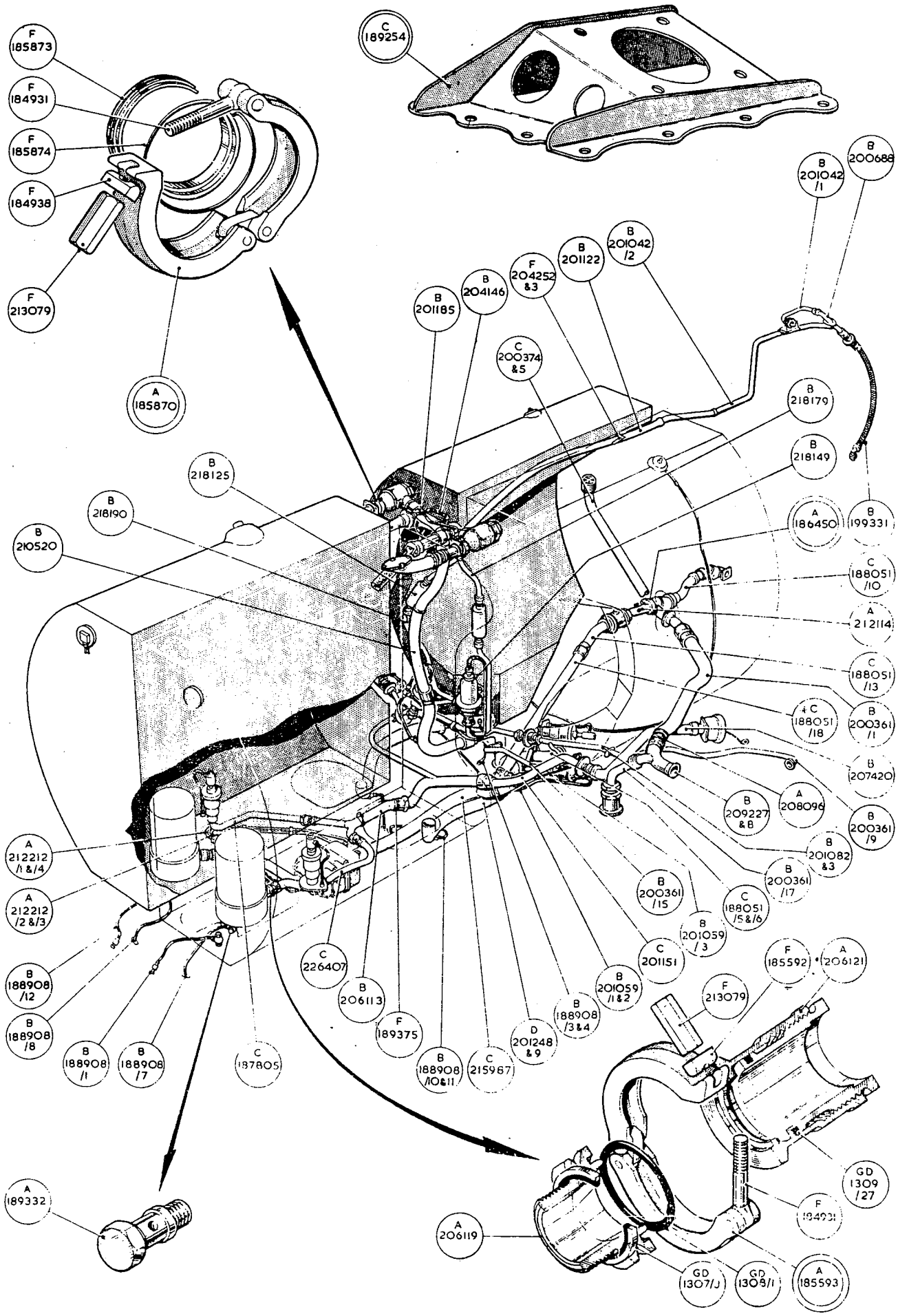
F 185873
F 184931
F 185874
F 184938
F 213079
A 185870
C 189254
B 200688
B 201042 /1
B 201042 /2
B 201122
F 204252 &3
B 204146
B 201185
C 200374 &5
B 218179
B 218149
B 218125
B 218190
B 210520
A 186450
B 199331
C 188051 /10
A 212114
C 188051 /13
C 188051 /18
B 200361 /1
B 207420
A 208096
B 209227 &8
B 200361 /9
B 201082 &3
B 200361 /17
C 188051 /5&6
B 200361 /15
B 201059 /3
C 201151
F 185592
A 206121
F 213079
B 201059 /1&2
B 188908 /3&4
D 201248 &9
C 215967
B 188908 /10&11
F 189375
B 206113
C 226407
C 187805
B 188908 /1
B 188908 /7
B 188908 /8
B 188908 /12
A 212212 /2&3
A 212212 /1&4
A 189332
A 206119
GD 1309 /27
F 184931
GD 1307/J
GD 1308/1
A 185593

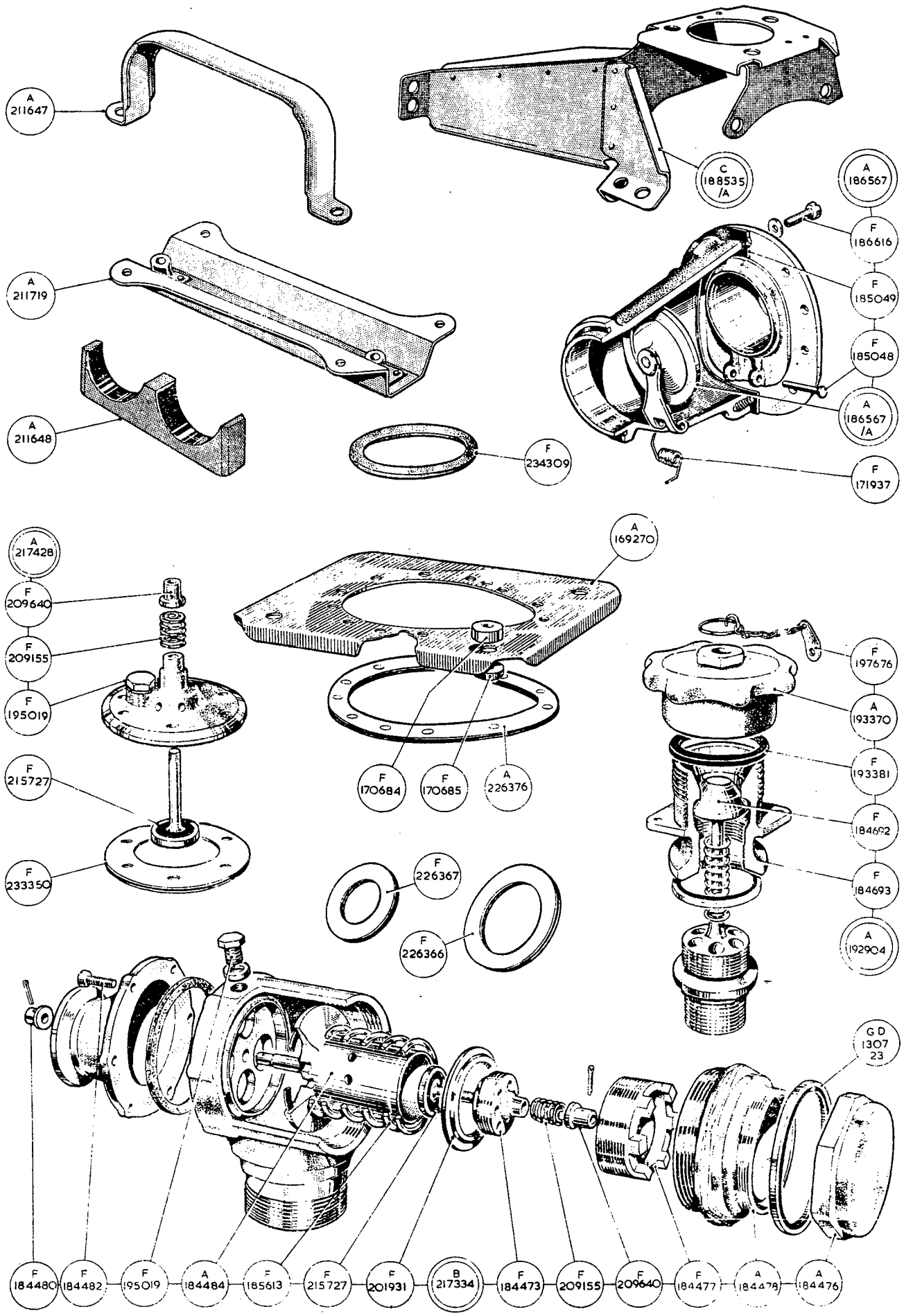
A 211647
C 188535/A
A 186567
F 186616
A 211719
F 185049
F 185048
A 211648
A 186567/A
F 234309
F 171937
A 217428
A 169270
F 209640
F 209155
F 195019
F 197676
A 193370
F 215727
F 170684
F 170685
A 226376
F 193381
F 184692
F 233350
F 226367
F 184693
F 226366
A 192904
GD 1307 23
F 184480
F 184482
F 195019
A 184484
F 185613
F 215727
F 201931
B 217334
F 184473
F 209155
F 209640
F 184477
A 184478
A 184476

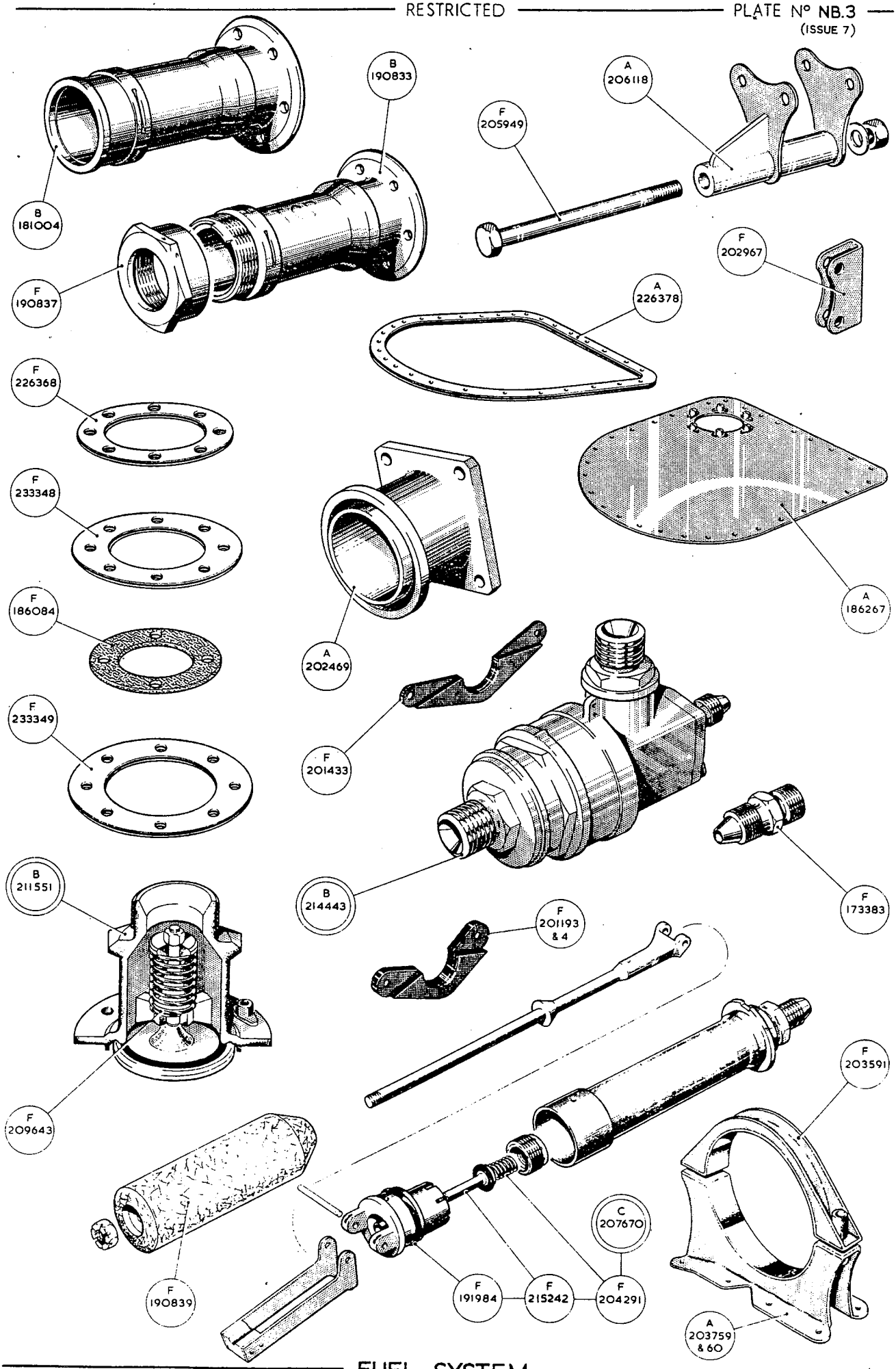
B 181004
B 190833
F 190837
F 205949
A 206118
F 202967
A 226378
F 226368
F 233348
F 186084
F 233349
A 202469
A 186267
F 201433
B 214443
F 173383
B 211551
F 201193 & 4
F 209643
F 203591
C 207670
F 190839
F 191984
F 215242
F 204291
A 203759 & 60

This file was downloaded
from the RTFM Library.

Link: www.scottbouch.com/rtfm

Please see site for usage terms,
and more aircraft documents.