SERVICES—FUEL SYSTEM IN WINGS

	Ref. No.	Part No.	Description (1 2 3 4 5)	No. Off	Material Specification	M.R. Class of Store	Place No.
		E.206680-1	FUEL SYSTEM IN WINGS, ASSEMBLY	—	—	—	
	—	—	Cables, electrical (See Cable Chart)	—	—	—	
	1136	A.186450	Clamp, pipe connection, group	4	—	C.	NC.1
	2723	F.184931	Bolt, eye	1	S.94.B	C.	
	6526	F.213079	Nut, special	1	S.95	C.	
	2724	F.185592	Washer	1	DTD.364	C.	
	4992	F.200275	Clamp, pipe connection, group	2	—	C.	NC.1
	2723	F.184931	Bolt, eye	1	S.94	C.	
	6526	F.213079	Nut, special	1	S.95	C.	
	2724	F.185592	Washer	1	DTD.364	C.	
	421	A.185593	Clamp, pipe connection, group	4	—	C.	
	2723	F.184931	Bolt, eye	1	S.94.B	C.	
	2724	F.185592	Washer	1	DTD.364	C.	
	5059	A.186451	Clamp, pipe connection, group	4	—	C.	
	2723	F.184931	Bolt, eye	1	S.94.B	C.	
	2724	F.185592	Washer	1	DTD.364	C.	
	5414	Std.851/68	Clip, support, for vent pipe at rib "G"	2	L.72	C.	4
	10883	Std.851/30	Clip, support, for vent pipe at rib No. 2	2	L.72	C.	4
	4165	Std.850/35	Clip, support, for earthing connector	2	L.72	C.	4
23	27FR/6341403	Flight Refuelling FRS.132.F	Connector	2	—	B.	
	4105	Std.1285.8.CC	Connector, earth, at rib "A"	2	—	C.	4
	4993	F.205032	Packing, for vent pipe clip at rib "G"	2	LFS.21	C.	
	4994	Std.1939/1	Packing, for vent pipe clip at rib No. 2	2	LFS.21	C.	5
	6987	A.207209/4	Pipe, air, inboard tank to connection	2	DTD.253	C.	NC.1
	4996	B.198928/2	Pipe, connection to connection, port	1	DTD.253	C.	NC.1
	4997	B.198928/3	Pipe, air, connection to connection, starboard	1	DTD.253	C.	NC.1
	5000	B.198928/6	Pipe, fuel, transfer, connection to tank, port	1	DTD.253	C.	NC.1
	5001	B.198928/7	Pipe, fuel, transfer, connection to tank, starboard	1	DTD.253	C.	NC.1
	7902	A.206783	Pipe, fuel, inboard to outboard pylon, port	1	BSS.265	C.	NC.1
	7903	A.206784	Pipe, fuel, inboard to outboard pylon, starboard	1	BSS.265	C.	NC.1
	7898	C.206676	Pipe, fuel, by-pass valve to connection, port	1	DTD.253	C.	NC.1
	7899	C.206677	Pipe, fuel, by-pass valve to connection, starboard	1	DTD.253	C.	NC.1
	7900	C.206678	Pipe, air, Flight Refuelling coupling to connection, port	1	DTD.253	C.	NC.1
	7901	C.206679	Pipe, air, Flight Refuelling coupling to connection, starboard	1	DTD.253	C.	NC.1
	7892	B.206682	Pipe, fuel, between pylons	2	DTD.253	C.	NC.1
	7893	B.206683	Pipe, air, between pylons	2	DTD.253	C.	NC.1
	7894	C.206684	Pipe, fuel, outboard by-pass valve to connection, port	1	DTD.253	C.	NP.1
	7895	C.206685	Pipe, fuel, outboard by-pass valve to connection, starboard	1	DTD.253	C.	NC.1
	7896	C.206686	Pipe, air, outboard, by-pass valve to connection, port	1	DTD.253	C.	NC.1
	7897	C.206687	Pipe, air, outboard by-pass valve to connection, starboard	1	DTD.253	C.	NC.1
23	27QA/4534542	Dowty GD.1309/16	Ring, sealing, at suction relief valve	2	—	C.	
23	27QA/4534547	Dowty GD.1309/25	Ring, sealing, at transfer pipe couplings	4	—	C.	

SERVICES—FUEL SYSTEM IN WINGS

Ref. No.	Part No.	Description (1 2 3 4 5)	No. Off	Material Specification	M.R. Class of Store	Plate No.
27QA/4534527	Dowty GD.1308/2	Ring, sealing, at fuel pipe connections	10	—	C.	NC.1
27QA/4534546	Dowty GD.1309/23	Ring, sealing, at fuel pipe connection outboard by-pass valve	2	—	C.	
27QA/4534545	Dowty GD.1309/21	Ring, sealing, at air pipe connections	4	—	C.	
5006	Std.1703/7C	Screw, special, for suction relief valve	4	S.95.B	C.	5
7906	A.206273	Support, at rib "J" for fuel and air pipes between pylons	4	LFS.21	C.	NC.1
7907	A.206274	Support, at rib "M" for fuel and air pipes between pylons	4	LFS.21	C.	NC.1
7908	A.206275	Support, at rib "Q" for fuel and air pipes between pylons	4	LFS.21	C.	NC.1
	E.206941-2	TANK, INSTALLATION, ASSEMBLY	—	—		
5023	F.202080	Adaptor, union, for air pipe	2	L.56	C.	NC.1
6777	F.210001	Bolt, special at transfer duct connection (AS.770/45)	12	S.95.B	C.	NC.1
7066	F.211844	Bolt, special, for tank interconnection	36	S.95.B	C.	NC.1
6A/4333733	Smiths JM.14	Box, terminal	2	—	B.	
6A/4333734	Smiths JU.6	Box, terminal	8	—	B.	
—	Std.843/38	Clip, support, for air pipe in No. 1 tank (Make from 30A/549, Q.R.)	2	—	—	4
5025	C.198341	Duct, transfer, in No. 1 tank, port	1	S.54 & L.59	C.	NC.1
5026	C.198342	Duct, transfer, in No. 1 tank, starboard	1	L.54 & L.59	C.	NC.1
5027	C.198530	Duct, transfer, inner, in No. 2 tank, port	1	L.54 & L.59	C.	NC.1
5028	C.198531	Duct, transfer, inner, in No. 2 tank, starboard	1	L.54 & L.59	C.	NC.1
5029	C.198343	Duct, transfer, outer, in No. 2 tank, port	1	L.54 & L.59	C.	NC.1
5030	C.198344	Duct, transfer, outer, in No. 2 tank, starboard	1	L.54 & L.59	C.	NC.1
6991	C.209795	Duct, transfer, inner, in No. 3 tank, port	1	L.54 & L.59	C.	NC.1
6992	C.209796	Duct, transfer, inner, inner, in No. 3 tank, starboard	1	L.54 & L.59	C.	NC.1
5033	C.198345	Duct, transfer, outer, in No. 3 tank, port	1	L.54 & L.59	C.	NC.1
5034	C.198346	Duct, transfer, outer, in No. 3 tank, starboard	1	L.54 & L.59	C.	NC.1
5035	C.198526	Duct, transfer, in No. 4 tank, port	1	L.54 & L.59	C.	NC.1
5036	C.198527	Duct, transfer, in No. 4 tank, starboard	1	L.54 & L.59	C.	NC.1
6095	B.208097	Duct, outlet, port, in No. 1 tank, group	1	—	B.	NC.1
6096	B.208098	Duct, outlet, starboard, in No. 1 tank, group	1	—	B.	NC.1
	A.199074	Plate, mounting	2	DTD.610		
27QA/4534528	Dowty GD.1308/4	Ring, sealing, "O" type	2	—	C.	
5CW/4405031	Flight Refuelling D.3504100/2	Float, switch, in No. 4 tank	2	—	A.	NC.1
9655	A.226375	Gasket, sealing at tank mounting plate	8	22L.72/33/2/1	C.	
2144	Std.1231/3	Lug, locking	2	S.3	C.	4
	A.232202	Plate, sealing (AS.770/45)	2	L.72		
6988	B.207013	Plate, mounting, at leading edge spar for No. 1 tank	2	DTD.610	C.	NC.1
6990	B.207014	Plate, mounting, at leading edge spar for Nos. 2 and 3 tanks	4	DTD.610	C.	NC.1
6989	B.207015	Plate, mounting, at leading edge spar for No. 4 tank	2	DTD.610	C.	NC.1
5042	B.202091	Pipe, air, flexible, in No. 1 tank	2	—	C.	NC.1
5043	B.202075	Pipe, air, in no. 1 tank, port	1	DTD.253	C.	NC.1
5044	B.202076	Pipe air, in No. 1 tank, starboard	1	DTD.253	C.	NC.1
5045	C.198514	Pipe, fuel transfer, in No. 4 tank, port	1	L.54 & L.59	C.	NC.1
5046	C.198515	Pipe, fuel transfer, in No. 4 tank, starboard	1	L.54 & L.59	C.	NC.1
5047	A.199113	Ring, clamping transfer ducts to ribs	12	DTD.364	C.	NC.1
27QA 4534527	Dowty GD.1308/2	Ring, sealing, "O" type, at transfer ducts connections	12	—	C.	NC.1

SERVICES—FUEL SYSTEM IN WINGS

	Ref. No.	Part No.	Description 1 2 3 4 5	No. Off	Material Specification	M.R. Class of Store	Plate No.
	6208	F.210208	Ring, sealing, at bulkhead connection on front spar	2	—	C.	
23	27QA/8013728	Dowty GD.1307/3	Seal, bonded	64	—	C.	NC.1
23	27QA/8013719	Dowty GD.1307/4	Seal, bonded, at transfer duct connections	24	—	C.	NC.1
23	27QA/8043262	Dowty GD.1307/G	Seal, bonded, at bulkhead connection on leading edge spar	2	—	C.	NC.1
	—	—	Tanks (See section "Q")	—	—	—	
	9654	F.226373	Washer, sealing, at No. 4 tank transfer pipe flange	2	22.L72/33/2/HG334H	C.	NC.1
	9653	F.226372	Washer, sealing, at float switch in No. 1 tank ...	2	22.L72/33/2/HG334H	C.	NC.1
	9652	F.226371	Washer, sealing, at No. 1 tank air pipe flange ...	2	22.L72/33/2/HG334H	C.	NC.1
	9659	A.226379	Washer, sealing, at outlet duct in No. 1 tank	2	22.L72/33/2/HG334H	C.	
	9648	F.226367	Washer, sealing	10	22.L72/33/2/HG334H	C.	
	5053	F.199096	Seal, "U", at float switch in No. 4 tank	2	Rubber	C.	NC.1
	4042	Std.1509/23/030	Tube, distance, at fuel pipe support, 5/16" o/d x 17 S.W.G. x 0.30" long ...	4	T.4	MR/C	4
	8190	A.218022	Valve, suction relief, port, group	1	—	B.	NC.1
	8191	A.218023	Valve, suction relief, starboard, group	1	—	B.	NC.1
	6200	F.209640	Collar	1	—	C	NC.1
		A.210450	Pipe, port	1	—		
		A.210451	Pipe, starboard	1	—		
	6199	F.209155	Spring	1	Steel	C.	NC.1
	7050	F.215727	Valve	1	—	C.	NC.1

SERVICES—FUEL SYSTEM IN WINGS

Ref. No.	Part No.	Description (1 2 3 4 5)	No. Off	Material Specification	M.R. Class of Store	Plate No.
	A.233327/8	FUEL SYSTEM IN WINGS ASSEMBLY	—	—		
		(Conversion Wing Only)				
		To Wing Serial Numbers:—				
		41H/670099 HABL/001208				
		41H/670148 HABL/001249				
		41H/670163 HABL/002018				
		41H/670462 HABL/002053				
		41H/670514				
		41H/670529				
		Identical to system fuel assembly E.206680-1 except for the following deletions and additions				
		DELETE:--				
7902	A.206783	Pipe, fuel, inboard to outboard pylon, port	1	—	C.	
7903	A.206784	Pipe, fuel, inboard to outboard pylon, starboard	1	—	C.	
7892	B.206682	Pipe, fuel, between pylons	2	—	C.	
7893	B.206683	Pipe, air, between pylons	2	—	C.	
7906	A.206273	Support, at rib "J" for fuel and air pipes, between ..... pylons	4	—	C.	
7907	A.206274	Support, at rib "M" for fuel and air pipes, between .... pylons	4	—	C.	
		ADD:—				
421	A.185593	Clamp, fuel pipe connection at rib "M" group	2	—	C.	
2723	F.184931	Bolt, eye	1	S.94.B	C.	
2724	F.185592	Washer	1	DTD.364	C.	
5059	A.186451	Clamp, air pipe connection between ribs "M-N" ..... group	2	—	C.	
2723	F.184931	Bolt, eye	1	S.94.B	C.	
2724	F.185592	Washer	1	DTD.364	C.	
	B.210509	Pipe, air, inboard pylon to coupling between ribs ..... "M-N", port	1	DTD.253		
	B.210510	Pipe, air, inboard pylon to coupling between ribs ..... "M-N", starboard	1	DTD.253		
13135	B.210511	Pipe, air, coupling between ribs "M-N" to outboard .... pylon, port	1	DTD.253	C.	
	B.210512	Pipe, air, coupling between ribs "M-N" to outboard .... pylon, starboard	1	DTD.253		
13144	B.207362	Pipe, fuel, between inboard and outboard pylons	4	DTD.253	C.	
	A.234181	Pipe, fuel, at inboard pylon, port	1	BSS.265		
	A.234182	Pipe, fuel, at inboard pylon, starboard	1	BSS.265		
27QA/4534527	Dowty Seals GD.1308/2	Ring, sealing, at fuel pipe connection rib "M"	2	—	C.	
27QA/4534545	Dowty Seals GD.1309/21	Ring, sealing, at air pipe connection between ribs ..... "M-N"	2	—	C.	
	A.207331	Support, at rib "M" for fuel and air pipes between ..... pylons	4	LFS.21		
	A.234202	Support, at rib "J" for fuel and air pipes between ..... pylons	4	LFS.21		
4042	Std.1509/23/030	Tube, distance, at fuel pipe support rib "M" ..... (Starboard only)	2	T.4	MR/C	

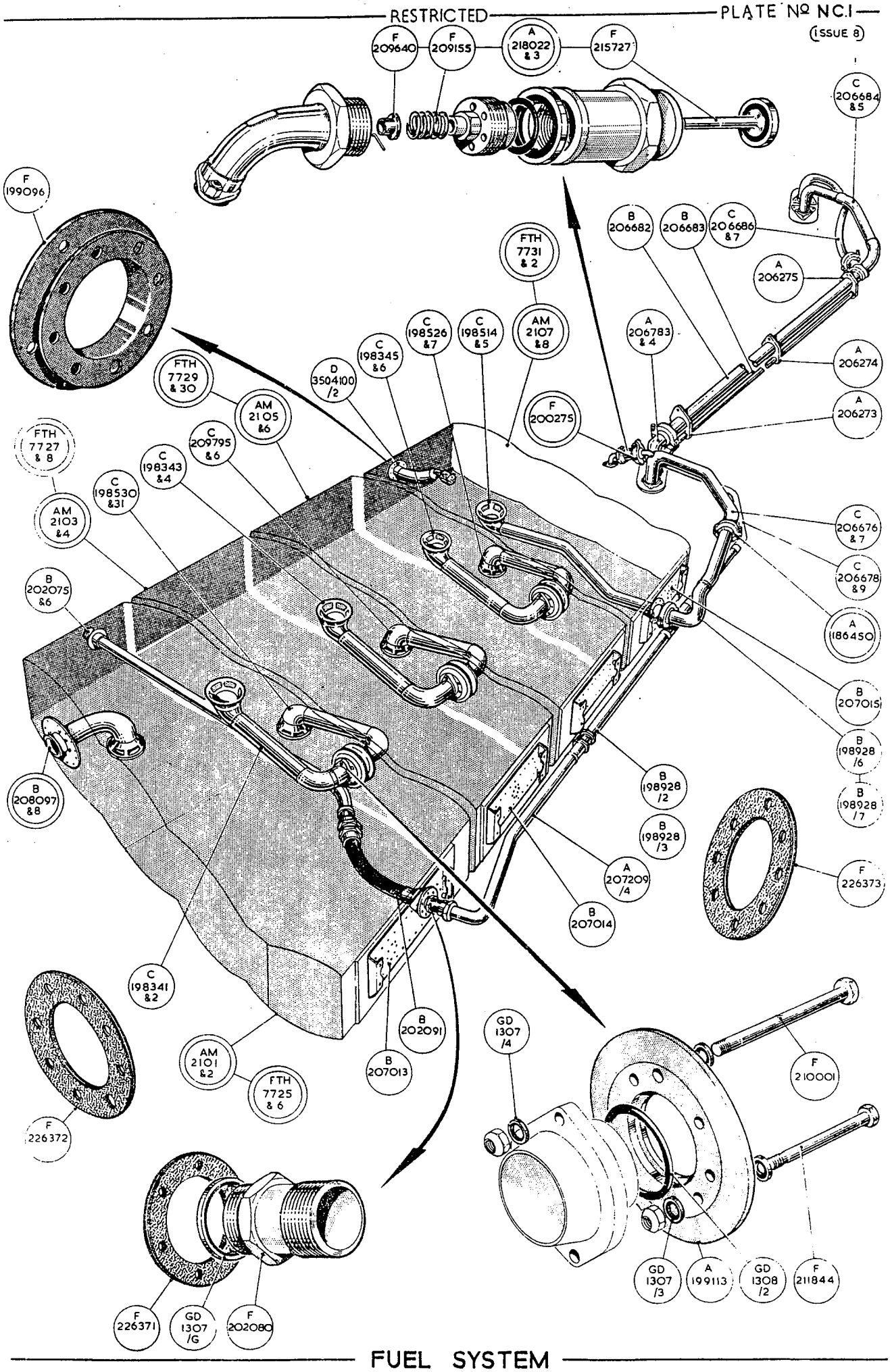
F 209640
F 209155
A 218022 &3
F 215727
C 206684 &5
F 199096
B 206682
B 206683
C 206686 &7
A 206275
FTH 7731 &2
AM 2107 &8
C 198526 &7
C 198514 &5
C 198345 &6
A 206783 &4
A 206274
FTH 7729 &30
D 3504100 /2
AM 2105 &6
F 200275
A 206273
FTH 7727 &8
C 209795 &6
C 198343 &4
C 198530 &31
AM 2103 &4
C 206676 &7
C 206678 &9
B 202075 &6
A 186450
B 207015
B 198928 /6
B 198928 /7
B 208097 &8
B 198928 /2
B 198928 /3
A 207209 /4
F 226373
B 207014
C 198341 &2
B 202091
GD 1307 /4
F 210001
AM 2101 &2
FTH 7725 &6
B 207013
F 226372
GD 1307 /3
A 199113
GD 1308 /2
F 211844
F 226371
GD 1307 /6
F 202080

This file was downloaded
from the RTFM Library.

Link: www.scottbouch.com/rtfm

Please see site for usage terms,
and more aircraft documents.