Chapter I GROUND HANDLING

(Completely revised)

LIST OF CONTENTS

	Para.
Introduction	1
Access to cabin	2
Forward towing	3
Backward towing	4
Picketing	5
Air intake safety guards	6
Weather covers	7
Flying controls locking gear	8
Control surface locking clamps	9
Undercarriage safety locks	10
Parking with brakes on	11
Care of engine	12
Moving a crashed aircraft	13

LIST OF ILLUSTRATIONS

	Fig.
General ground equipment	1
Pilot's ladder	2
Flying controls locking gear	3
Control surface locking clamps	4
Undercarriage safety locks	5
Picketing equipment and covers	6
Moving a crashed aircraft	7
Loading aircraft on trailer	8
Drop tank trolley	9

WARNING

AIRCREW EJECTION SEATS.
Before attempting to enter the cabin ensure that the instructions detailed on the LETHAL WARNING marker card at the beginning of this volume have been complied with.

THIS IS VERY IMPORTANT

ENGINE
When the aircraft is being manoeuvred on the ground with the engine running, or when the engine is being run for any purpose it is essential that all personnel keep well clear of the air intakes and jet exhausts. To remain in proximity is hazardous to safety.
The air intake safety guards must be fitted at all times when the engine is being ground run.

Introduction

1. This chapter contains the recommended procedure for handling the aircraft on the ground, together with the necessary special equipment provided for the various operations. This equipment has been designed to eliminate any possibility of damage and distortion occurring during handling and should therefore, be used in preference to other type of similar equipment, as otherwise the efficiency of the aircraft may be seriously impaired. When the aircraft is being worked upon, or ground handled in any way, ensure that the air-intake and jet exhaust blanking boards are in position as well as any other covers provided which will not impede the progress of the work in hand. This is particularly important when the weather is gusty and liable to increase the possibility of sand or dust entering the systems. Instructions for jacking, trestling and slinging of the aircraft will be found in Sect. 2, Chap. 4.

Access to cabin

2. As footsteps, apart from the emergency step located between frames 10 and 11 on either side of the fuselage, are not provided on this aircraft, two special ladders must be employed to gain access to the cabin. Each ladder consists of a tubular structure with triangular supporting members assembled to the rear face and a pivoted footstep support at the top. The supporting members carry a bearing member and a support arm with a spigot, which together with the footstep engage with the aircraft. To protect the aircraft finish, the footstep and support arm incorporate rubber rollers and the bearing members, which are shaped to conform with the fuselage contour, are also covered with rubber. To fit a ladder to the aircraft, raise the pivoted footstep and retain it in the up position by the ball catch. Offer up the ladder to the aircraft and engage the spigot in the socket inside the emergency footstep. With the bearing member against the fuselage skin, push down the pivoted footstep until the ladder is locked in position.

Forward towing *(fig. 1)*

3. The aircraft may be towed forward by a tractor with the aid of the nose wheel towing arm, consisting of a long towing unit and an

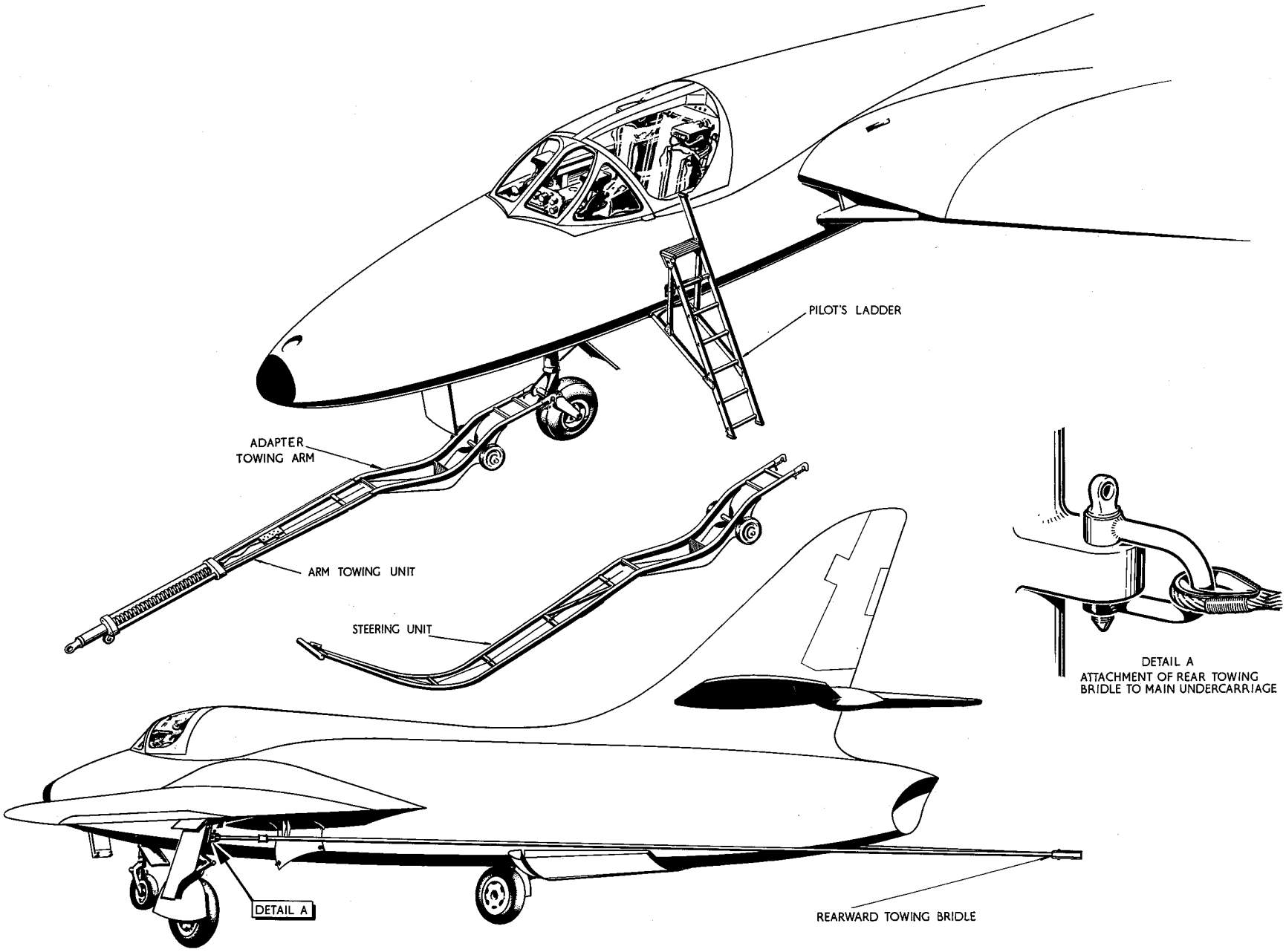

14671

Fig. 1 General ground equipment

RESTRICTED

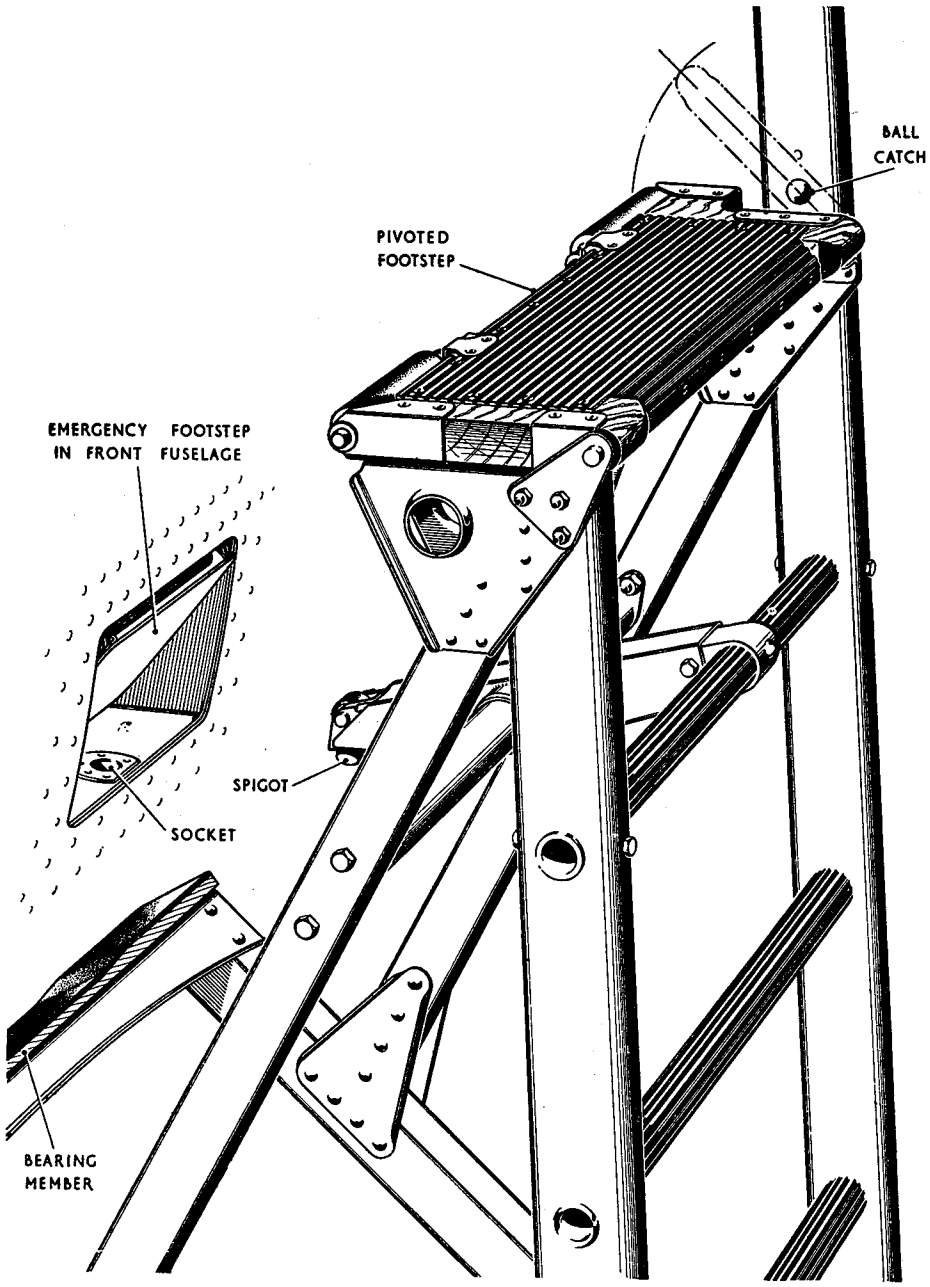

Fig. 2 Pilot's ladder

adapter towing arm, attached to spools on the nose wheel unit. The towing arm release mechanism must be set to release at a load of 3 000 lb and the method of using it is described in A.P.2817A, Vol. 1. When a tractor is not available, the aircraft may be manoeuvred manually, steering being effected by means of the long steering unit together with the adapter towing arm.

Backward towing

4. A special towing bridle is provided for backward towing, the bridle being attached to lugs on each main undercarriage leg. When using the bridle, it is recommended that the nose wheel be turned through 180 deg so that it is trailing in the reverse direction to normal and the aircraft steered by attaching the long steering unit and adapter towing arm to the spools on the nose wheel unit. It is essential that care is taken to ensure that the bridle does not foul and damage the aircraft due to an excessive swing when steering.

Note . . .

At all times when the aircraft is being towed, either forwards or backwards, it is recommended that a member of the ground crew be stationed in the cabin to control the wheel brakes. After a number of brake applications it will be necessary to replenish the hydraulic accumulators by use of the handpump.

Picketing (*fig. 6*)

5. Special picketing shackles are provided for attachment to the nose wheel unit, to each main undercarriage leg and to the bottom of the rear fuselage adjacent to frame 52. When picketing, a shackle should be secured to the nose wheel unit by a quick-release pin passed through the attachment lugs just above the nose wheel fork. Further shackles should be fitted to the lugs on each main undercarriage leg and secured in position with the collars and quick-release pins provided. A special shackle should be screwed into the socket adjacent to frame 52. From these shackles the aircraft is lashed down by lengths of 2 in. Sisal rope to suitable pickets. Ensure that the ropes do not

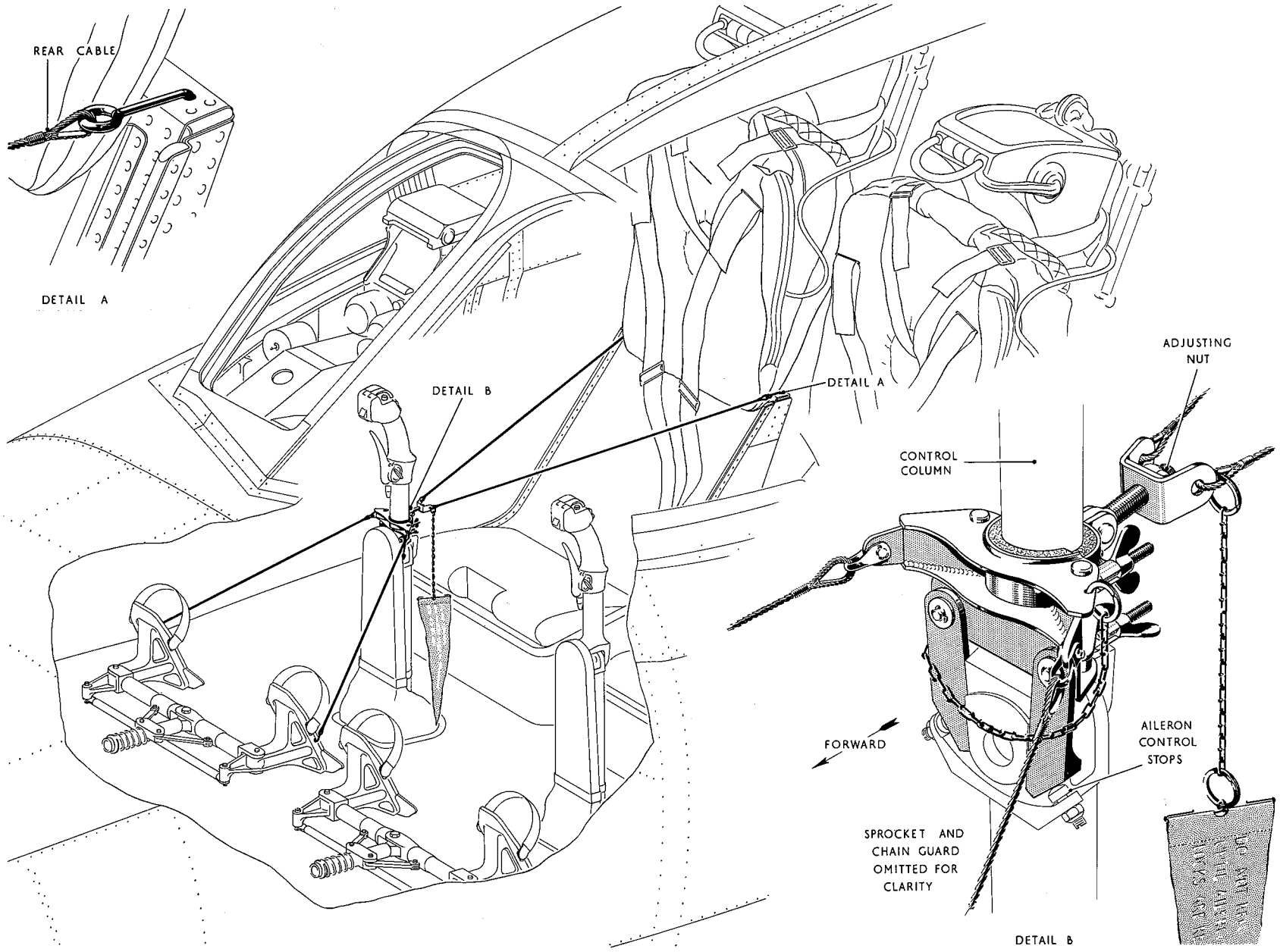

Fig. 3 Flying controls locking gear

RESTRICTED

foul any part of the structure and that they are only just taut as otherwise subsequent rope shrinkage may cause damage to the aircraft. The type of picket used will be determined by the condition of the parking ground. *As a safeguard against the aircraft being flown with the picketing shackles in position, a red warning pennant is attached to each. These pennants must not be removed from the shackles.*

Air intake safety guards (*fig. 6*)

6. Tubular safety guards are provided for fitment to the air intakes, to safeguard personnel working on the aircraft during an engine run. It is important to ensure that these are fitted at all such times, to eliminate the possibility of a serious accident.

Weather covers (*fig. 6*)

7. To prevent the ingress of foreign matter and moisture, blanking boards are provided for the air intakes and jet pipe outlet. These must be fitted at all times when the aircraft is parked, and also during servicing operations. Covers are provided for the cabin, centre fuselage ducts, boundary layer ducts and pressure head.

Flying controls locking gear (*fig. 3*)

8. This gear secures the flying controls in the cabin to prevent undue movement of the control surfaces. *It is only designed to secure the controls when the aircraft is parked in calm weather and must* not *be used alone if the weather is gusty* (*para. 9*). The procedure for fitting the gear is as follows:—

(1) Move the seat to its lowest position and place the rudder bar pedal adjuster in the central position.

(2) Assemble the aileron locking clip *(lower clip, detail B)* on to the control column, push down until the tongues are firmly positioned between the aileron stops and the column, then tighten the wing nut.

(3) Assemble the upper clip of the locking gear on to the control column above the clip fitted in sub-para. (2), as illustrated *(detail B)*.

Note . . .

To engage this clip with the control column it is first necessary to thread the left-hand forward cable and clip between the column and brake cable, if necessary easing the brake cable out of the way.

(4) Hook the forward pair of cables through the holes in the outer side plates of the rudder pedals.

(5) Hook the rear pair of cables (*detail A*) into the tooling holes in the cross member at the top of the seat pan.

(6) Partially tension the cables by adjusting the seat back rest pan and obtain the correct tension by means of the adjuster nut (*detail B*). Once the correct adjustment has been made, subsequent installation of the locking gear may be effected by adjustment of the seat back rest pan.

WARNING

Undue force must not be used when tensioning the cable between the seat pan and the control column.

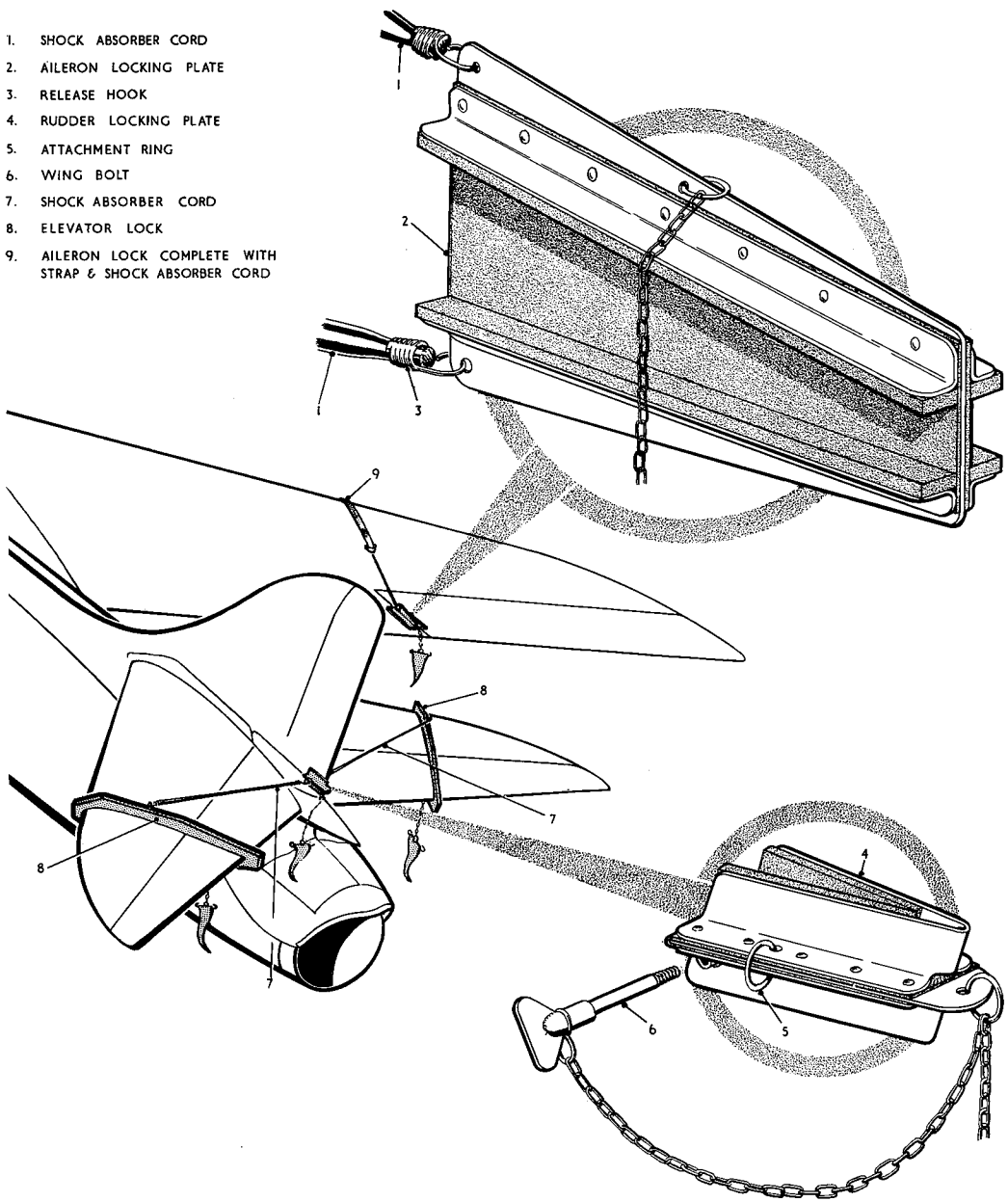

Fig. 4. Control surface locking clamps

Control surface locking clamps *(fig. 4)*

9. Special control surface locking clamps are provided for use at all times when the aircraft is parked in the open in gusty weather. These are additional to the flying control locking gear, which should always be fitted first *(described in para. 8)*.

Note . . .

On no account is the flying controls locking gear to be removed while the control surface locking clamps are in position.

To fit the locking clamps, proceed as follows:—

(1) Fit the flying control locking gear.

(2) Insert the vertical plate (2) of the aileron locking clamp into the gap between the inner end of the aileron and wing. Pull the strap over the leading edge of the wing, tension the shock-absorber cord (1) and secure by inserting the release hook (3) in the hole in the under portion of the locking clamp.

(3) Insert the rudder locking clamp (4) into the gap between the lower end of the rudder and the fin. Secure in position by screwing the wing bolt (6) through the hole in fin.

(4) Fit the elevator locking clamps (8) by passing the contour boards over the tail plane and elevators until they restrain the elevator movement and secure them in position by engaging the shock-absorber cords (7) with the attachment rings (5) on the rudder locking clamp.

Note . . .

To safeguard against the aircraft being flown with the locks fitted, red warning pennants are attached to each item. These pennants must not be removed from the locking clamps.

Undercarriage safety locks (*fig. 5*)

10. Special safety locks are provided to eliminate the possibility of inadvertent retraction of the undercarriage while the aircraft is on the ground. These locks must be fitted during the servicing immediately after flight and removed only during the servicing immediately before flight or when a particular servicing operation renders such removal essential, in which case they should be replaced immediately the servicing has been completed. The locks must be in position during all towing operations and when manhandling the aircraft. The lock for the nose wheel leg consists of a clamping bar and a screwed rod fitted with a fork at one end and a wing nut at the other. The fork is fitted to a lug on the nose wheel jack piston rod by a quick-release pin and the other end is passed through a hole in the clamping bar, which bridges the nose wheel aperture in the fuselage, after which the whole assembly is tensioned by the wing nut. The locks for the main undercarriage legs consist of cylindrical sleeves which pass around the operating jack piston rods, being secured in position by trunnion bolts and wing nuts. Each sleeve is provided with shims for initial adjustment. *To safeguard against the aircraft being flown with the locks still in position, red warning pennants, which must not be removed, are attached to each lock.*

Parking with brakes on

11. When the aircraft is left parked with the brakes on for any length of time, the flying control locking gear must be fitted to prevent loss of pressure from the hydraulic accumulators due to movement of the rudder bar. Such loss of pressure will release the brakes and prevent them from being used again until the accumulators are re-energized.

Care of engine

12. If the engine is not to be run-up for seven days or more, it must be inhibited as a precaution against corrosion in accordance with the instructions contained in the engine handbook. All apertures should be suitably blanked off to exclude the ingress of dirt and moisture; *rag must not be used for this purpose.*

Moving a crashed aircraft (*fig. 7*)

13. The procedure for moving an aircraft which has crashed in any of the following three conditions is shown on this illustration, the necessary salvage operations also being covered—

(1) With the nose and main undercarriage undamaged.
(2) With the nose undercarriage damaged.
(3) With both nose and main undercarriage damaged.

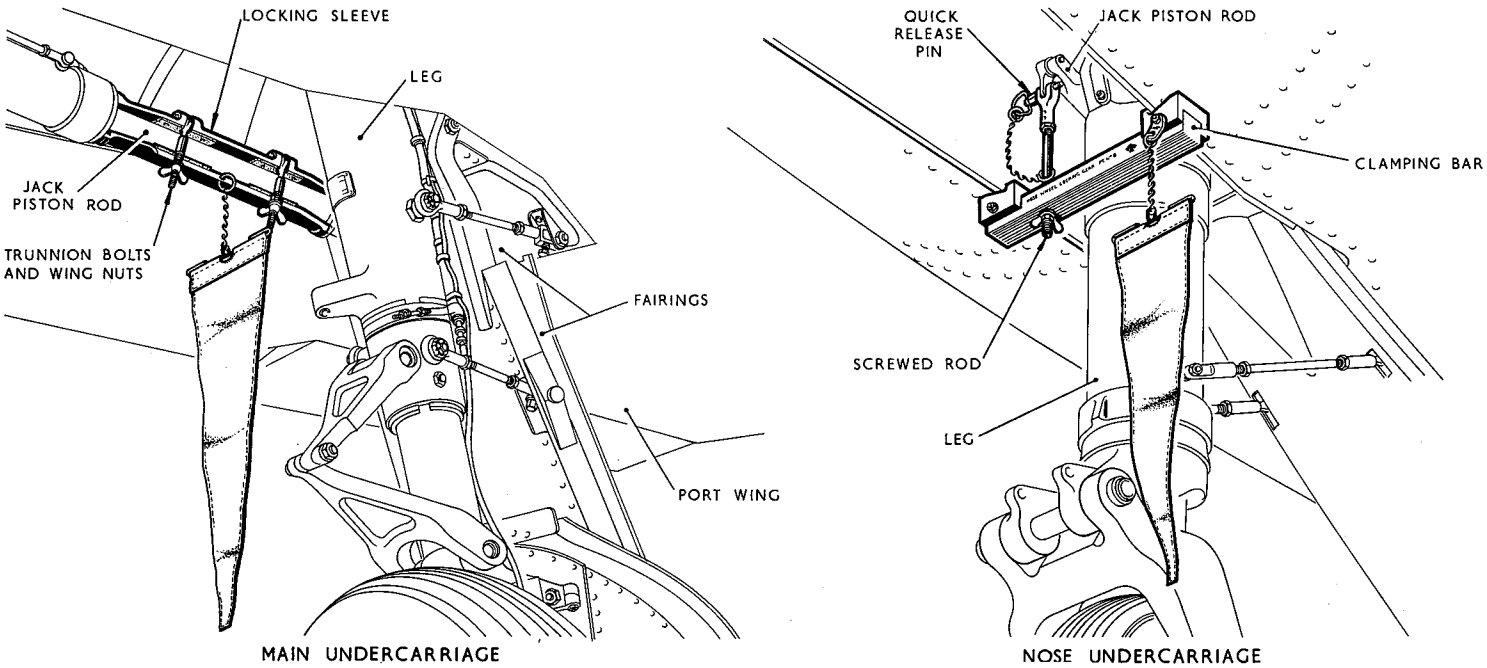

Fig. 5 Undercarriage safety locks

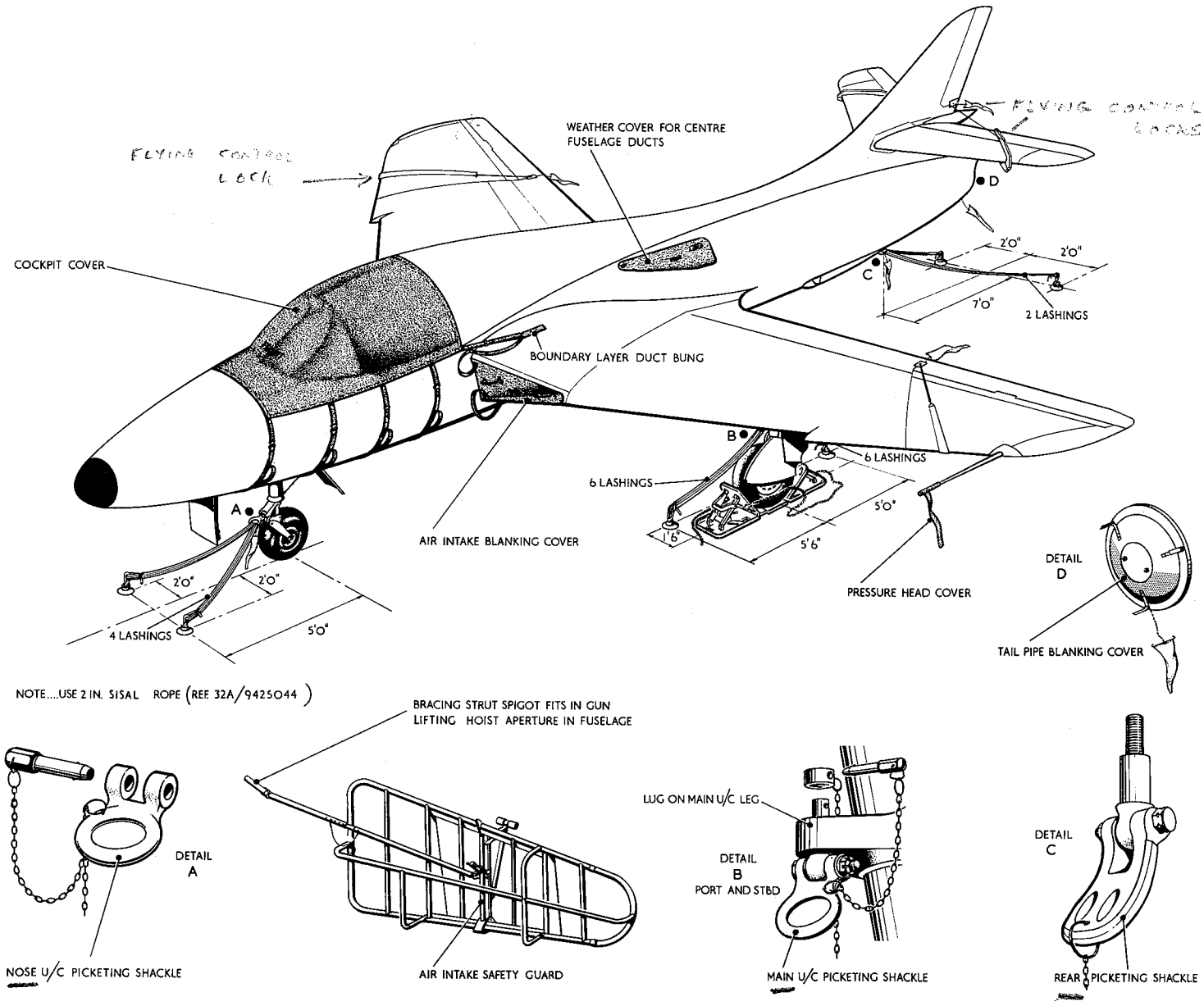

Fig. 6 Picketing equipment and covers

RESTRICTED

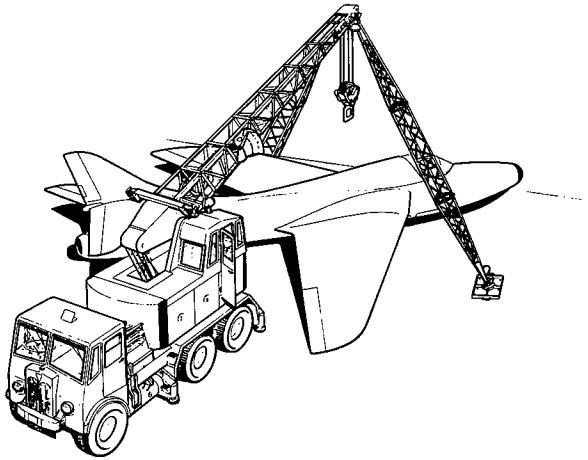

1. COVER THE AIR INTAKES AND EXIT TO PREVENT THE ENTRY OF FURTHER GRIT AND DUST. ATTACH THE COMPLETE AIRCRAFT TYPE SLING (SECT.2, CHAP.4) AND RAISE THE AIRCRAFT.

NOTE . . .
SHEER LEGS MUST BE USED WHEN LIFTING COMPLETE AIRCRAFT.

LOWER THE ALIGHTING GEAR AND CHECK THAT IT IS LOCKED AND UNDAMAGED. FIT UNDERCARRIAGE SAFETY LOCKS (FIG.5). LOWER THE AIRCRAFT, ATTACH A TOWING ARM TO THE NOSE UNDERCARRIAGE AND, WITH A MAN IN CONTROL OF THE AIRCRAFT BRAKES, TOW THE AIRCRAFT FORWARDS.

WARNING . . .
DO NOT INTERFERE WITH ANY PART OF THE EJECTION SEAT, EXCEPT TO RELEASE OR CUT THROUGH THE PILOT'S HARNESS, UNTIL THE CARTRIDGE FIRING DEVICES HAVE BEEN RENDERED SAFE. DO NOT ATTEMPT TO REMOVE THE CARTRIDGES.

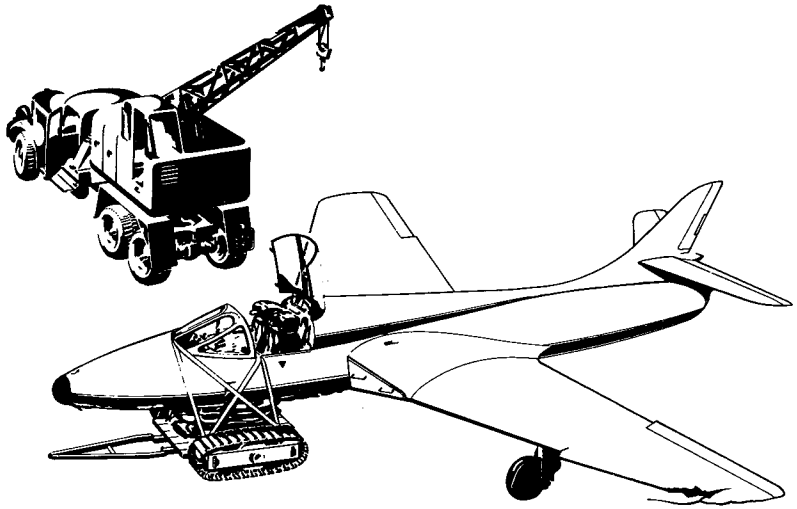

2. IF THE NOSE UNDERCARRIAGE IS DAMAGED AND JAMMED UP, AND THE MAIN UNDERCARRIAGE IS UNDAMAGED, MOVE A SALVAGE TROLLEY TYPE B PADDED WITH SANDBAGS, UNDER THE NOSE AND SECURE THE FUSELAGE TO THE TROLLEY. FIT SAFETY LOCKS TO THE MAIN UNDERCARRIAGE. ATTACH A TOWING BAR TO THE TROLLEY AND, WITH A MAN IN CONTROL OF THE AIRCRAFT BRAKES, TOW THE AIRCRAFT FORWARDS.

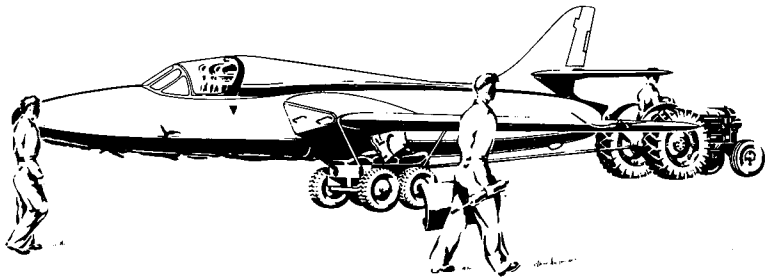

3. IF THE MAIN AND NOSE UNDERCARRIAGE ARE DAMAGED, LOWER THE AIRCRAFT ON TO A SALVAGE TROLLEY TYPE A OR TYPE C PADDED WITH SANDBAGS AS SHOWN, MAKING SURE THAT THE C.G. OF THE AIRCRAFT IS, AS NEAR AS POSSIBLE, OVER THE CENTRE OF THE TROLLEY. LASH THE AIRCRAFT TO THE TROLLEY AND, WITH PERSONNEL STATIONED TO STEADY THE AIRCRAFT, TOW THE AIRCRAFT AWAY.

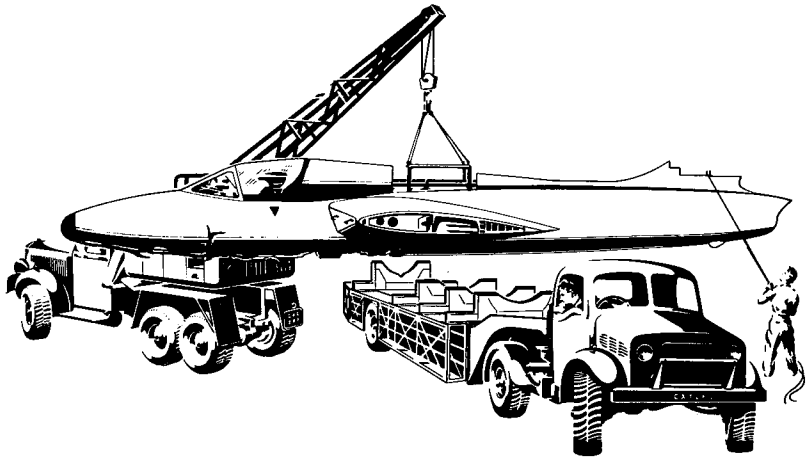

4. REMOVE THE WINGS, ELEVATOR, ANTI-BUFFET FAIRING, RUDDER AND FIN, SLING THE AIRCRAFT WITH THE SALVAGE TYPE SLING, STEADYING THE FUSELAGE WITH GUIDE ROPES. LOWER THE AIRCRAFT ON TO THE TRAILER WITH THE NOSE TO THE DRIVER'S CABIN, SETTLING THE FUSELAGE ON TRESTLES AT FRAMES 8, 19, 32 AND 52 AS SHOWN ON FIG.8. THE TRESTLES ARE TO BE SECURED TO THE TRAILER TO PREVENT MOVEMENT DURING TRANSIT. LOAD THE REMAINING STRUCTURE ON A SECOND TRAILER.

Fig.7 Moving a crashed aircraft

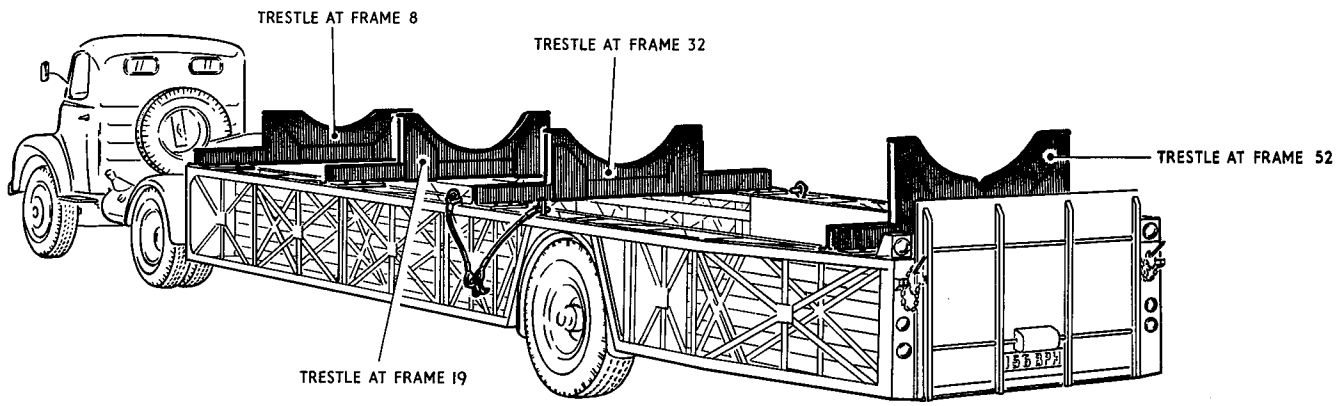

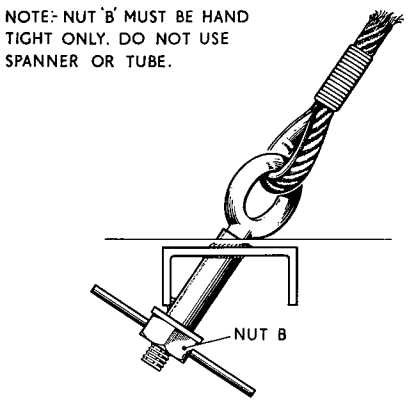

DETAIL A

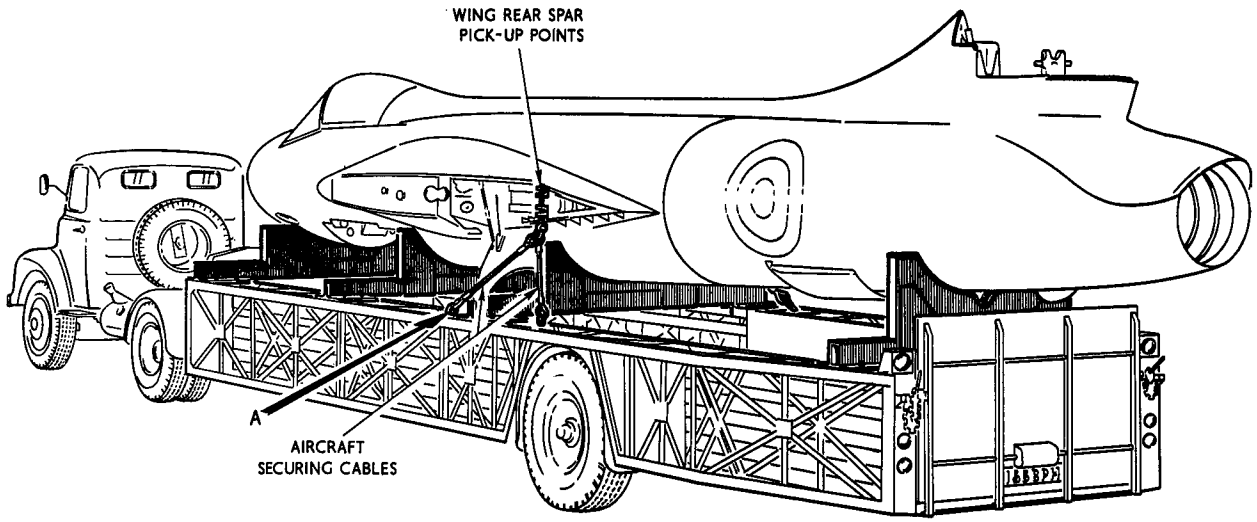

Fig. 8 Loading aircraft on trailer

This file was downloaded
from the RTFM Library.

Link: www.scottbouch.com/rtfm

Please see site for usage terms,
and more aircraft documents.