Chapter 6 HYDRAULIC SYSTEM

CONTENTS

	Para
Introduction	1

DESCRIPTION

	Para
Supply circuit	3
Engine-driven pump	4
Handpump	5
Reservoir	6
Filters	7
External supply couplings	8
Emergency air supply bottles	9
Hydraulic accumulators	10
Alighting gear	11
Undercarriage control	14
Emergency lowering	15
Flaps	16
Emergency operation of flaps	18
Aileron booster system	19
Elevator booster system	21
Wheel brakes	22
Air brake	23
Operation	24
Cabin Hood	25
Operation	26
Windscreen wipers	26A
Operation	26B

SERVICING

	Para
General	27
Power control selector valves — override device	27A
Hydraulic reservoir	28
Emergency air cylinders and hydraulic accumulators	29
Lubrication	30
Faults	31
Loss of pressure	
External leakage	32
Internal leakage	34
Air in the system	35
Bleeding the system	36
Bleeding after use of emergency controls	37
Testing air brake on the ground (undercarriage down)	38
Testing air brake on the ground (undercarriage up)	39
Checking flap pressure regulating valve	40
Operational tests	41
Testing emergency air system	42
Testing the wheel brakes	43
Testing undercarriage emergency up selection	44
Pressure settings and adjustment of components	45
Fluid decontamination	46
Draining the system	46A
Filters	47
Windscreen wipers	48

REMOVAL AND ASSEMBLY

	Para
General	49
Access to components	50
Maxaret units	51
Air brake jack	52
Flap emergency air valve release microswitch adjustment	53
Windscreen wiper motor and blade assemblies	54
Elevator accumulator charging valve	55
Micronic filters STI/Hunter/385	56

ILLUSTRATIONS

	Fig.
Hydraulic system diagram (1)	1
Hydraulic system diagram (2)	1A
Hydraulic system diagram (3)	1B
Hydraulic system installation (1)	2
Hydraulic system installation (2)	3
Tool operating aileron and elevator selector valve	3A
Flap synchronization test rig	4
Windscreen wiper installation	5
Tool manipulating micronic filter tell-tale	6

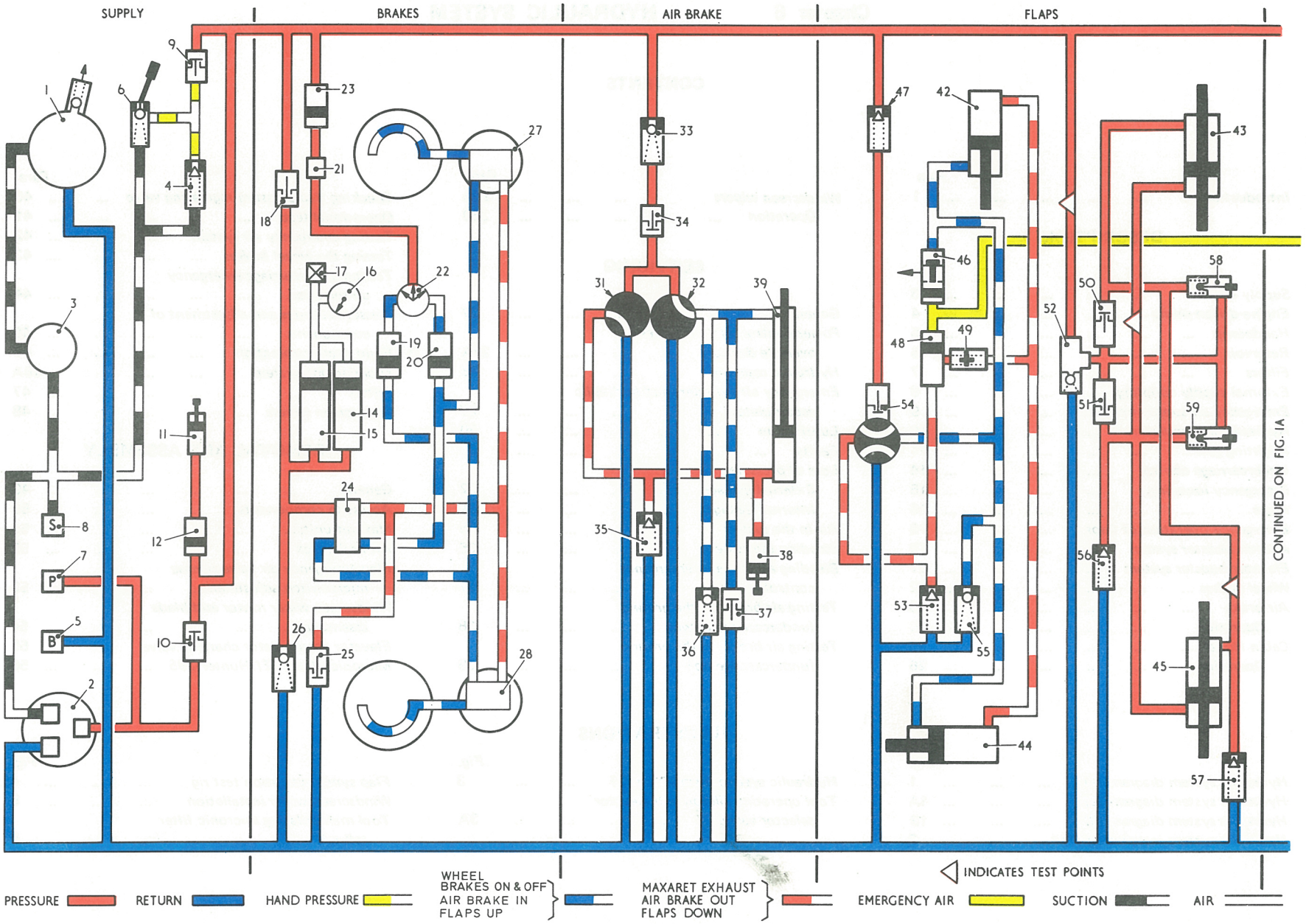

Fig. 1 Hydraulic system diagram (1)
(Wheel brakes identification corrected)

22634–25435

KEY TO FIG.1

SUPPLY

1 RESERVOIR
2 ENGINE-DRIVEN PUMP
3 OIL FILTER
4 PRESSURE RELIEF VALVE
5 EXTERNAL SUPPLY VALVE - BYPASS
6 HANDPUMP
7 EXTERNAL SUPPLY VALVE - PRESSURE
8 EXTERNAL SUPPLY VALVE - SUCTION
9 NON RETURN VALVE
10 NON RETURN VALVE
11 PRESSURE SWITCH
12 PRESSURE RELAY

WHEEL BRAKES

14 ACCUMULATOR
15 ACCUMULATOR
16 ACCUMULATOR PRESSURE GAUGE

WHEEL BRAKES (Continued)

17 CHARGING CONNECTION
18 NON-RETURN VALVE
19 PRESSURE RELAY
20 PRESSURE RELAY
21 CHOKE
22 TRIPLE PRESSURE GAUGE
23 PRESSURE RELAY
24 RELAY CONTROL VALVE
25 NON-RETURN VALVE
26 THERMAL RELIEF VALVE
27 MAXARET EQUIPMENT
28 MAXARET EQUIPMENT

AIR BRAKES

31 MAIN SELECTOR
32 HIGH SPEED SELECTOR
33 PRESSURE REGULATOR VALVE
34 NON RETURN VALVE
35 PRESSURE RELIEF VALVE
36 THERMAL RELIEF VALVE
37 NON-RETURN VALVE
38 PRESSURE SWITCH
39 JACK

FLAPS

42 FLAP JACK
43 FLAP SYNCHRONIZING JACK
44 FLAP JACK
45 FLAP SYNCHRONIZING JACK
46 OIL JETTISON VALVE
47 PRESSURE REGULATOR VALVE
48 SHUTTLE VALVE
49 TWO-WAY THROTTLING VALVE
50 NON-RETURN VALVE
51 NON-RETURN VALVE
52 PRESSURE REDUCING VALVE
53 PRESSURE RELIEF VALVE
54 CONTROL VALVE
55 THERMAL RELIEF VALVE
56 PRESSURE RELIEF VALVE
57 PRESSURE RELIEF VALVE
58 SELECTOR VALVE (PRESSURE RELEASE)
59 SELECTOR VALVE (PRESSURE RELEASE)

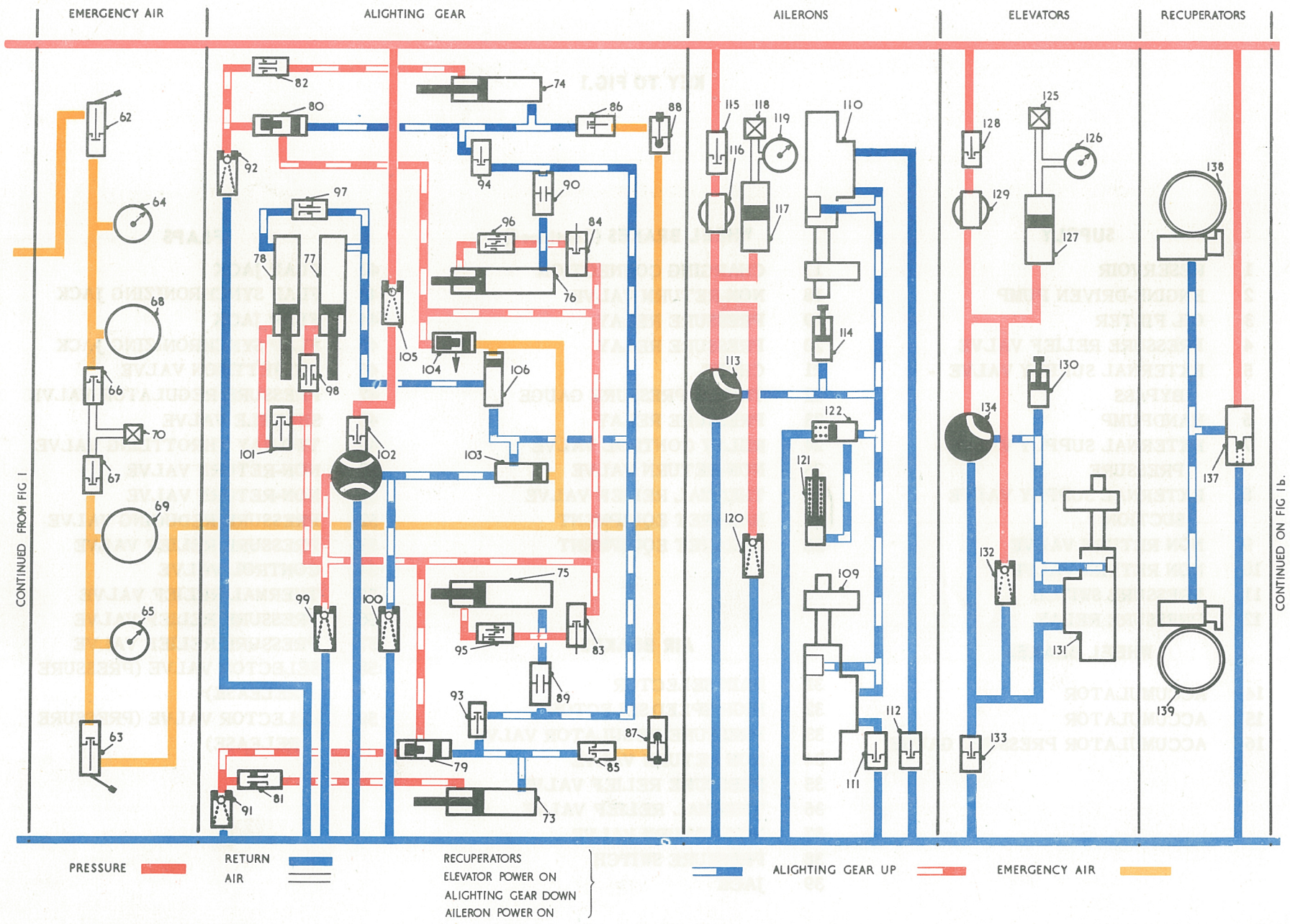

Fig.1a Hydraulic system diagram (2)

RESTRICTED

KEY TO FIG.1A

EMERGENCY AIR

62 AIR RELEASE VALVE
63 AIR RELEASE VALVE
64 EMERGENCY AIR SUPPLY PRESSURE GAUGE
65 EMERGENCY AIR SUPPLY PRESSURE GAUGE
66 NON-RETURN VALVE
67 NON-RETURN VALVE
68 EMERGENCY AIR SUPPLY BOTTLE
69 EMERGENCY AIR SUPPLY BOTTLE
70 CHARGING CONNECTION

ALIGHTING GEAR

73 MAIN U/C JACK
74 MAIN U/C JACK
75 MAIN U/C FAIRING DOOR JACK
76 MAIN U/C FAIRING DOOR JACK
77 NOSE WHEEL UNIT JACK
78 NOSE WHEEL UNIT FAIRING DOOR JACK
79 SEQUENCE VALVE
80 SEQUENCE VALVE
81 RESTRICTOR ONE WAY
82 RESTRICTOR ONE WAY
83 SEQUENCE VALVE
84 SEQUENCE VALVE
85 NON-RETURN VALVE

ALIGHTING GEAR (Continued)

86 NON-RETURN VALVE
87 PRESSURE RELIEF VALVE (EMERGENCY AIR)
88 PRESSURE RELIEF VALVE (EMERGENCY AIR)
89 RESTRICTOR
90 RESTRICTOR
91 THERMAL RELIEF VALVE
92 THERMAL RELIEF VALVE
93 SEQUENCE VALVE
94 SEQUENCE VALVE
95 PRESSURE REGULATOR VALVE
96 PRESSURE REGULATOR VALVE
97 RESTRICTOR-ONE WAY
98 RESTRICTOR-ONE WAY
99 THERMAL RELIEF VALVE
100 THERMAL RELIEF VALVE
101 NOSE WHEEL UNIT SEQUENCE VALVE
102 CONTROL VALVE
103 SHUTTLE VALVE
104 OIL JETTISON VALVE
105 PRESSURE REGULATOR VALVE
106 SHUTTLE VALVE

AILERONS

109 AILERON HYDRO BOOSTER
110 AILERON HYDRO BOOSTER
111 NON-RETURN VALVE
112 NON-RETURN VALVE

AILERONS (Continued)

113 AILERON CONTROL VALVE
114 PRESSURE SWITCH
115 NON RETURN VALVE
116 MICRONIC FILTER
117 AILERON ACCUMULATOR
118 CHARGING CONNECTION
119 ACCUMULATOR GAUGE
120 THERMAL RELIEF VALVE
121 AILERON JACK
122 SHUTTLE VALVE

ELEVATORS

125 CHARGING CONNECTION
126 ACCUMULATOR GAUGE
127 ELEVATOR ACCUMULATOR
128 NON-RETURN VALVE
129 MICRONIC FILTER
130 PRESSURE SWITCH
131 ELEVATOR HYDRO-BOOSTER
132 THERMAL RELIEF VALVE
133 NON-RETURN VALVE
134 ELEVATOR CONTROL VALVE

RECUPERATOR

137 PRESSURE REDUCING VALVE
138 RECUPERATOR UNIT
139 RECUPERATOR UNIT

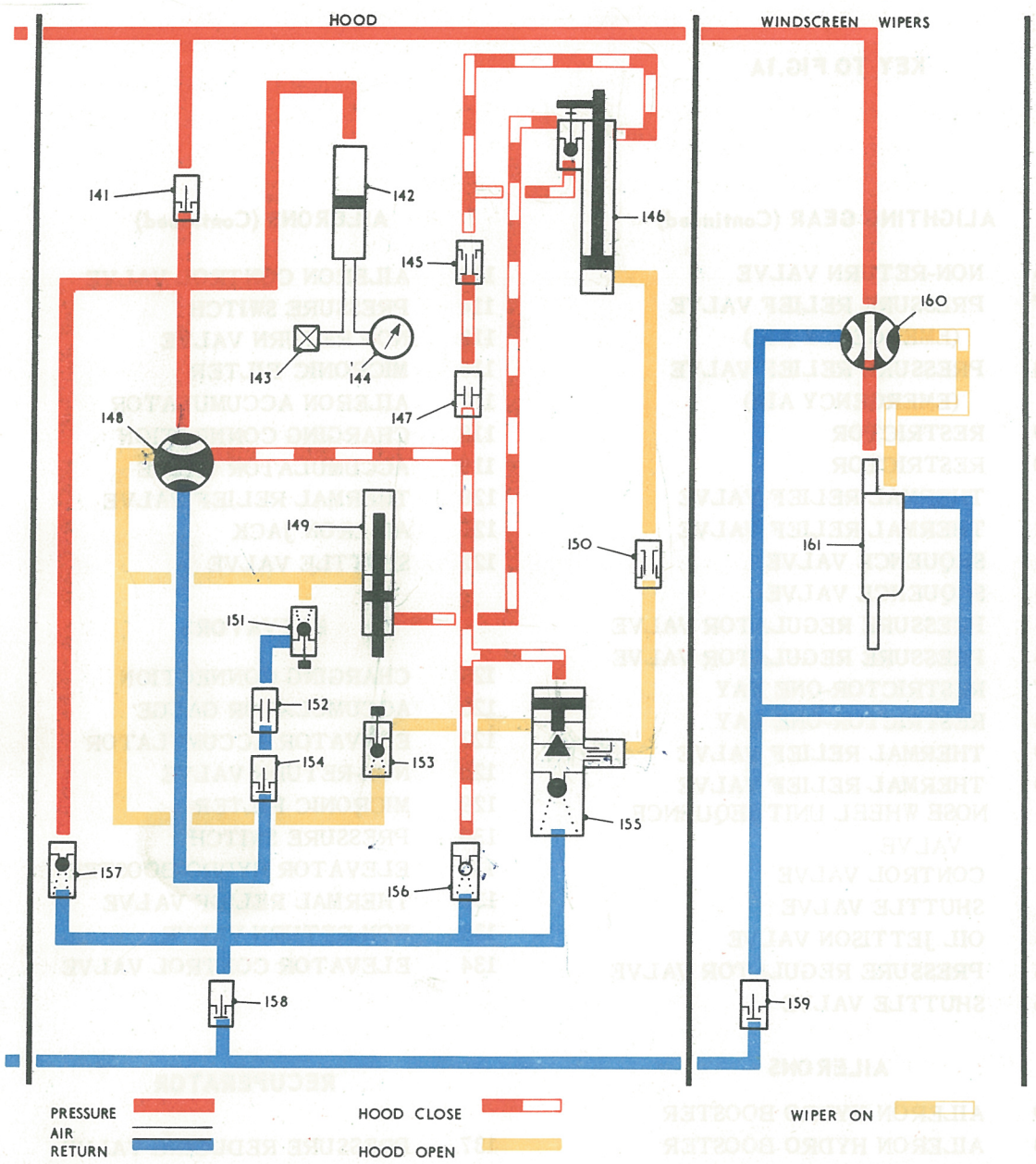

Fig 1b Hydraulic system diagram (3)

KEY TO FIG.1B

HOOD

141	NON-RETURN VALVE
142	ACCUMULATOR
143	ACCUMULATOR AIR CHARGING CONNECTION
144	ACCUMULATOR AIR PRESSURE GAUGE
145	ONE WAY RESTRICTOR
146	HOOD OPERATING JACK
147	RESTRICTOR
148	HOOD CONTROL VALVE
149	HOOD LOCKING JACK
150	ONE WAY RESTRICTOR
151	PRESSURE RELEASE VALVE
152	RESTRICTOR
153	PRESSURE RELEASE VALVE
154	NON-RETURN VALVE
155	HOOD LOCK VALVE
156	THERMAL RELIEF VALVE
157	THERMAL RELIEF VALVE
158	NON-RETURN VALVE

WINDSCREEN WIPERS

159	NON-RETURN VALVE
160	CONTROL VALVE
161	WINDSCREEN WIPER MOTOR

Introduction

1. The hydraulic system operates the alighting gear, recuperators for main oleo legs, wheel brakes, air brake, landing flaps, cabin hood, windscreen wipers and power-operated ailerons and elevators. High pressure air bottles are provided for the emergency operation of the alighting gear and flaps, whilst the emergency operation of the wheel brakes, cabin hood and power-operated ailerons and elevators is accomplished by means of energy stored in hydraulic accumulators. Provision is made for the recharging of the air bottles and accumulators in-situ, the procedure being described in Sect.2, Chap.2.

2. The components used in the system are listed in the spare parts schedule and the majority of them are described in A.P.1803D and S, Vol.1. The component part numbers will be found in the master index of A.P.1803A and will enable a direct reference to be made to the applicable A.P. section and chapter. As the operation of some of the components is initiated electrically, reference should be made to Sect.5, Chap.1 for circuit details.

DESCRIPTION

Supply circuit

3. The supply circuit consists mainly of a reservoir, engine-driven pump and filter. For the operation of the system on the ground when the engine is not running, a handpump is incorporated in the circuit. External supply couplings are also provided, these being connected to an external supply trolley when ground testing the system. Both the engine-driven pump and handpump deliver fluid under pressure through their own non-return valves to the main delivery line and thence to the various circuits. The delivery line from the handpump is connected back to the suction line via a pressure relief valve. When off-loaded, the engine-driven pump circulates fluid back to the reservoir. The main filter is inserted in the suction line between the reservoir and pumps. Micronic filters are incorporated in the aileron and elevator power control circuits. The main delivery line branches via a pressure relay to a pressure switch which operates to illuminate a warning lamp if the pressure falls below 600 lb. per sq. in., thus warning the pilot to reduce speed sufficiently to permit manual operation of the flying controls. An additional warning is provided which generates an aural note in the pilots' headphones. An audio warning cut-out switch is mounted on the starboard side of the centre instrument panel.

Engine-driven pump

4. The engine-driven hydraulic pump is mounted on and is driven from the engine accessories gearbox, which is mounted at the bottom of the engine bay, just aft of the rear spar frame on the port side of the aircraft. Access to the gearbox and pump may be obtained after removing the access panels *(Sect.2, Chap.4, fig.3)*. To prevent the pump from overheating, a continuous flow of hydraulic fluid is circulated through the pump casing and back to the reservoir. A non-return valve incorporated in the delivery line prevents reverse flow when the engine, and consequently the pump, is not running.

Handpump

5. The hydraulic handpump is mounted in the engine bay and will operate any of the various services after the appropriate selection has been made. The pump, which draws fluid from the reservoir through the same filter as the engine-driven pump, delivers fluid under pressure through a non-return valve. A relief valve, set to blow-off at a pressure of 2 800-2 900 lb. per sq.in., is installed between the inlet and outlet connections of the pump. The pump handle is stowed in clips on the inside of the engine access door.

Reservoir

6. The hydraulic reservoir, which is of welded steel construction, is mounted in the engine bay between frames 35 and 36 on the port side of the aircraft. The filler cap, accessible through an access door in the rear portion of the top wing fillet on the port side of the aircraft, incorporates a sight glass which enables visual inspection of the contents of the reservoir to be made. To facilitate this inspection of fluid level, the inner circumference of the neck below the sight glass is

painted white. The filler cap secures a gauze filter element in the neck. Fluid is drawn through an internal stack pipe which is in connection with the outlet connection on the reservoir. From the outlet connection the fluid is conveyed via a pipe to the filter and thence through another pipe which branches to the engine-driven pump and handpump. The reservoir is vented to atmosphere through a vent valve incorporated in a banjo fitting on the reservoir and a drain connection through the aircraft skin. The procedure for the replenishing of the reservoir is described in Sect.2, Chap.2.

Filters

7. The hydraulic system main filter is mounted on frame 37, and micronic filters serving the aileron and elevator power control systems are located in the starboard wing and dorsal fin respectively. Information on the servicing of the filters is given in para.47.

External supply couplings

8. Three external supply couplings are provided for connection with the hydraulic servicing trolley to test the hydraulic system on the ground. These couplings are located in the engine bay and are accessible after removing the access panel in the bottom of the fuselage.

Emergency air supply bottles

9. The two high-pressure air bottles for the emergency operation of the alighting gear and landing flaps are mounted, together with the four anti-G air bottles, in a row across the cabin floor behind the seats. All six air bottles are charged in-situ, to the same pressure, simultaneously through a common in-situ charging valve. The procedure for the re-charging of the air bottles is described in Sect.2, Chap.2. The gauges for indicating the pressure in the hydraulic emergency air bottles are fitted at the rear of the cabin port shelf *(Mk.8 & 8C)* or above the starboard shelf *(Mk.8B)*.

Hydraulic accumulators

10. Hydraulic accumulators are provided for the emergency operation of the wheel brakes, cabin hood and power-operated ailerons and elevators. The two accumulators for brake operation are located in the nose wheel bay, and the one for the powered aileron circuit in the starboard wheel bay, together with its associated pressure gauge. The accumulator for operation of the elevator power controls, which also incorporates a pressure gauge in the circuit, is installed in the dorsal fin just forward of the tail plane, access being obtained through a door in the port side of the fin. This door is provided with a window to facilitate the reading of the pressure indicated on the gauge. The brake accumulator pressure gauge is mounted in the cabin. The accumulator for the emergency operation of the cabin hood is located in the hood fairing on the port side of the aircraft, and an in situ charging valve, together with the accumulator gauge, is situated adjacent to the anti-G/hydraulic emergency air charging connection (para.9).

Alighting gear

11. Actuation of the hydraulically-operated alighting gear is initiated electrically from either of the pilots' control switches in the cabin. The switches energize a solenoid-operated control valve mounted on the front spar in the starboard wheel bay. Four pipes are connected to this valve, two of these being from the supply and return lines, while the other two direct fluid to and from the undercarriage jacks and fairing door jacks. Fluid flowing to the anchored end of the jacks passes freely through two shuttle valves, these valves having no positive function unless it is necessary to lower the undercarriage by means of the emergency air supply. Mechanically-operated sequence valves are incorporated in the circuit to ensure that the fairing doors and wheel units operate in their correct functional order in relation to each other. Control of lowering speed is effected by means of restrictors in the pipe lines. A pressure regulator valve is also incorporated in the pressure line between the main supply and control valve to maintain pressure in the power control circuit. A pressure regulator valve in the line to each main door jack ensures that sufficient pressure is maintained in the wheel unit jacks to keep the wheel units fully up while the doors are being closed. A jettison valve, which is operated by high-pressure air when emergency lowering of the alighting gear is effected, permits the fluid expelled from the 'up' side of the jacks to be blown into the atmosphere. Each main undercarriage leg is provided with a

pressure recuperator which is attached to the leg in the region of the lower torque link. The recuperators, which obtain their pressure from the main pressure line of the hydraulic system, maintain a minimum charging pressure of 1 500 lb. per sq.in. in the main undercarriage shock-absorbers at all times when the hydraulic pump is running. To ensure that the high pressures generated during landing are contained within the shock-absorber units, each recuperator incorporates a shut-off valve.

12. When undercarriage DOWN is selected, fluid is directed through the two shuttle valves to the anchored end of the main wheel fairing door jacks, the nose wheel jack and the nose wheel fairing door jack. These jacks then commence to extend, the initial movement of the main wheel fairing door jacks opening the two main fairing door locks *(port and starboard)*. Subsequent lowering of the doors operates the leg fairing locks. When these jacks are fully extended, the undercarriage DOWN sequence valves open, permitting fluid to flow to the anchored end of the main undercarriage jacks and at the same time operates a sequence valve which opens the main undercarriage UP line to permit the main wheel jacks to extend and lower the wheels. The flow of fluid from the wheel unit jacks is impeded by one way restrictors in the pipe lines, thus preventing the units from extending too rapidly. An internal mechanical lock in each of the main wheel jacks secures the legs in the extended position. In the case of the nose wheel unit, the two doors open together and the wheel forces the fairing door clear as the leg extends. The nose wheel leg is locked down by means of a spring-loaded plunger at the top of the leg.

13. When undercarriage **UP** is selected, the hydraulic fluid is directed to the piston side of all jacks, except the door jacks to which flow is prevented by their closed sequence valves. Fluid flows comparatively freely into the wheel unit retracting jacks which commence to retract and raise the units. Final movement of the legs, in their upward travel, operate the sequence valves permitting fluid to flow to the door jacks which then retract to close the fairing doors, when spigots on the doors engage with the mechanical locks. During this operation, fluid expelled from the nose wheel door jack is impeded by a restrictor in the pipe line, thus preventing the door, which is assisted by air loads, from closing too rapidly.

Undercarriage control

14. The alighting gear is controlled from the cabin by two selector switches, one being a twin interlock unit situated on the port instrument panel for the pupil's use, while the other is a triple unit for the use of the instructor. Each selector switch consists of a set of inter-locked push-switches, designed in such a manner that the operation of any one push-switch automatically ejects the push-switch previously used. The upper push-switch of either the pupil's or instructor's unit is used to retract the alighting gear and each of these switches incorporates a solenoid safety lock, which engages when de-energized and prevent the alighting gear from being raised when the wheels are on the ground. These solenoids are controlled by a microswitch on each undercarriage leg, which breaks the circuit to the solenoids when the leg is compressed by the weight of the aircraft when the wheels are on the ground. Release of the load on take-off, or when the aircraft is jacked up with the wheels off the ground as for testing purposes, causes the microswitches to make contact, thus energizing the solenoids to release the locks and permit normal operation of the push-buttons. It is possible, however, to retract the alighting gear and belly land the aircraft, in an emergency by turning the knurled ring, located around the UP button of either undercarriage control, in a clockwise direction and then depressing the button. *This override of the solenoid locks should not normally be used to retract the alighting gear in flight.*

Note . . .

To re-set the solenoid lock override after emergency use, insert the Dowty re-setting tool (Part No.S.T.1567 or C.2524Y) into the small hole in the face of the UP button, press lightly and turn the knurled ring back to its original position.

The lower push-button switch of the pupil's selector unit, or the centre push-button switch of the instructor's unit, which are not provided with locks, are used to extend the alighting gear. Both the UP and DOWN push-button switches of the instructor's unit override the pupil's control, the lower

push-button switch is used to enable him to pass control back again. The circuit and a description of the interconnection of the instructor's and pupil's switches are given in detail in Sect.5, Chap.1.

Emergency lowering

15. In the event of hydraulic or electrical failure, the undercarriage legs may be lowered by the admission of high-pressure air into the hydraulic jacks which operate them. The air is obtained from a high-pressure air bottle, installed with the flap and anti-G air bottles in the front fuselage, just aft of the pilot's seats in the cabin. There are two shuttle valves, one for the main wheel units and the other for the nose wheel unit. When the emergency control is operated, high-pressure air is directed to the shuttle valves which operate to cut off the hydraulic supply circuit and at the same time permit air to flow to the anchored end of the nose wheel jack, the nose wheel fairing door jack and the main wheel fairing door jacks. These jacks then commence to extend, the initial movement of the main wheel fairing door jacks opening the main wheel fairing door locks *(port and starboard)*. Subsequent lowering of the doors operates the leg fairing locks, and these in turn, operate selection valves which pass air to the anchored ends of the main wheel jacks, thus causing them to extend and lower the legs. The air line is also in connection with a jettison valve which opens under the pressure of the emergency air and permits the fluid expelled from the jacks to be blown to atmosphere. The operation of the emergency control is described in Sect.1, Chap.3.

Note . . .

When once the emergency air system has been used, the release valve under the cabin port shelf must be re-set, the system bled of air and the high-pressure air bottle re-charged before next take-off.

Flaps

16. The hydraulically-operated landing flaps are controlled by selector switches situated one on the port instrument panel for the pupil's use, and one on the starboard instrument panel for the use of the instructor. The switches provide for UP, DOWN and six intermediate positions. Between these switches and the electro-hydraulic control valve in the port wheel bay is a drum switch which directs the current to the UP or DOWN solenoids of the valve according to the attitude of the flaps at the time of selection and breaks the circuit when the selected attitude of the flaps is attained. The drum switch is located in the port wing root and its associated Desynn transmitter in the port wheel bay just forward of the undercarriage girder.

17. The flap actuating jacks are mounted in the wings between the undercarriage girder and rear spar. Flap interconnection is by means of double-acting jacks through an independent connective system, fluid flowing to both ends of each jack simultaneously, the fluid displaced from the one being transferred to the other. These synchronizing jacks, which are fed through a reducing valve which drops the pressure to 500 lb. per sq.in. for the synchronizing circuit only, are also mounted between the undercarriage girder and rear spar in the wing. The synchronizing jacks are balanced out by selector valves which are operated every time the flaps are closed. A throttling valve is fitted in the main system to control the rate of movement of the flap and to assist synchronization should the connecting system fail. Fluid to the anchored ends of the main jacks passes through a shuttle valve which has no positive function until the emergency air system is used to lower the flaps in the event of hydraulic failure. A pressure relief valve is incorporated in the circuit between the control valve and flap jack. This valve, which is set to 3 050 ± 50 lb. per sq.in., prevents the flaps from being damaged, by excessive air loads, should they be extended at high air speed. A pressure regulating valve, located in the starboard wheel bay, is provided to prevent loss of pressure in the power controls circuit when operating the flaps. The valve is set to blow off at 1 100 - 1 150 lb. per sq.in. and to re-seat at 1000 lb. per sq.in. Three test connections, provided for use when checking the synchronizing of the flaps, are accessible, one via the engine access door in the bottom of the fuselage, and the other two via the access panels provided for the wing rear spar joints *(port and starboard)*. The use of these test connections is shown in fig.4.

Emergency operation of flaps

18. Emergency operation of the flaps in the event of hydraulic failure is effected by the admission of high-pressure air into the jacks which operate them, the air being obtained from a high-pressure air bottle mounted behind the seats in the cabin, adjacent to the air bottle for emergency operation of the alighting gear *(para.15)*. When the emergency control is operated, high-pressure air is directed to a shuttle valve which operates to cut off the hydraulic supply circuit and at the same time admits air to the jacks. The air pressure also operates a jettison valve which permits fluid expelled from the jacks to be blown to atmosphere.

Note . . .

When the emergency air system has been used, the release valve behind the port instrument panel must be re-set, the system bled of air and the high-pressure air bottle re-charged before the next take-off.

Aileron booster system

19. Hydraulically-operated booster jacks provide the power to move the ailerons. The jacks, which are provided with a servo valve and a locked release unit, are fitted, together with their linkage system, in a bay formed by ribs R and S, a diaphragm and the rear spar of their respective wings. Each booster jack has an internal by-pass which connects with either side of the jack piston. The by-pass incorporates a simple spring loaded valve that opens when the supply pressure falls below 200 lb. per sq.in. and closes when the pressure reaches 400 lb. per sq.in. Selection of power ON or OFF is made by the operation of a switch in the cabin and an indicator, adjacent to the switch, operated by a pressure switch in the hydraulic circuit, shows that, after selecting power ON, power is, in fact, available. The indicator shows black when the pressure at the booster is greater than 600 lb. per sq.in. and white when the pressure is less. Each assembly is carried on two sets of bearing blocks attached to the outboard face of rib R. The linkage consists of an input lever and output lever on one axis pin and a release unit on another, the booster unit being suspended between the levers and release unit. The aileron control tube from the control column is connected to the input lever and the control tube from the aileron is connected to the output lever. A two-position hydraulic jack assembled to the aileron torque tube below the cabin floor serves as a lever to transmit the motion of the torque tube to the control tubes which pass upwards behind the seat and then aft to the ailerons. The jack is fed with pressure oil from the same pressure line that serves the boosters, and consequently the jack is extended when the ailerons are in power. When the aileron control switch is placed to manual, or if hydraulic failure occurs, the jack, being spring-loaded, retracts and the oil trapped in the jack on retraction is by-passed via a shuttle valve to the return line to ensure a rapid change-over. Thus manual operation of the ailerons is effected through a shortened lever which reduces the range of aileron movement by approximately 6 deg. and less effort is required from the pilot to operate them. A spring feel unit is incorporated in the control system. The linkage system and its operation is described in Sect.3, Chap.4.

20. The hydraulic circuit is connected to the control valve through a micronic filter and a non-return valve. In the event of hydraulic failure an accumulator fitted in the starboard wheel bay will provide a reserve of power before the system reverts to manual conditions. From the control valve fluid is passed to the servo valve fitted at each aileron booster. The servo valve spindle is attached to the input/output lever assembly and is therefore directly connected to the control column, movement of which will operate the servo valve to admit fluid to one side of the hydro-booster and open the opposite side to return. The hydro-booster ram is fitted to the aircraft structure by the locked release unit and the jack body will move in response to fluid pressure on either side of the piston. The jack body is connected to the output lever and consequently moves the aileron in response to control column movement. The jack body continues to move until the servo motor is centralized and cuts off the fluid supply, holding the ailerons in the selected position until a further movement of the control column is

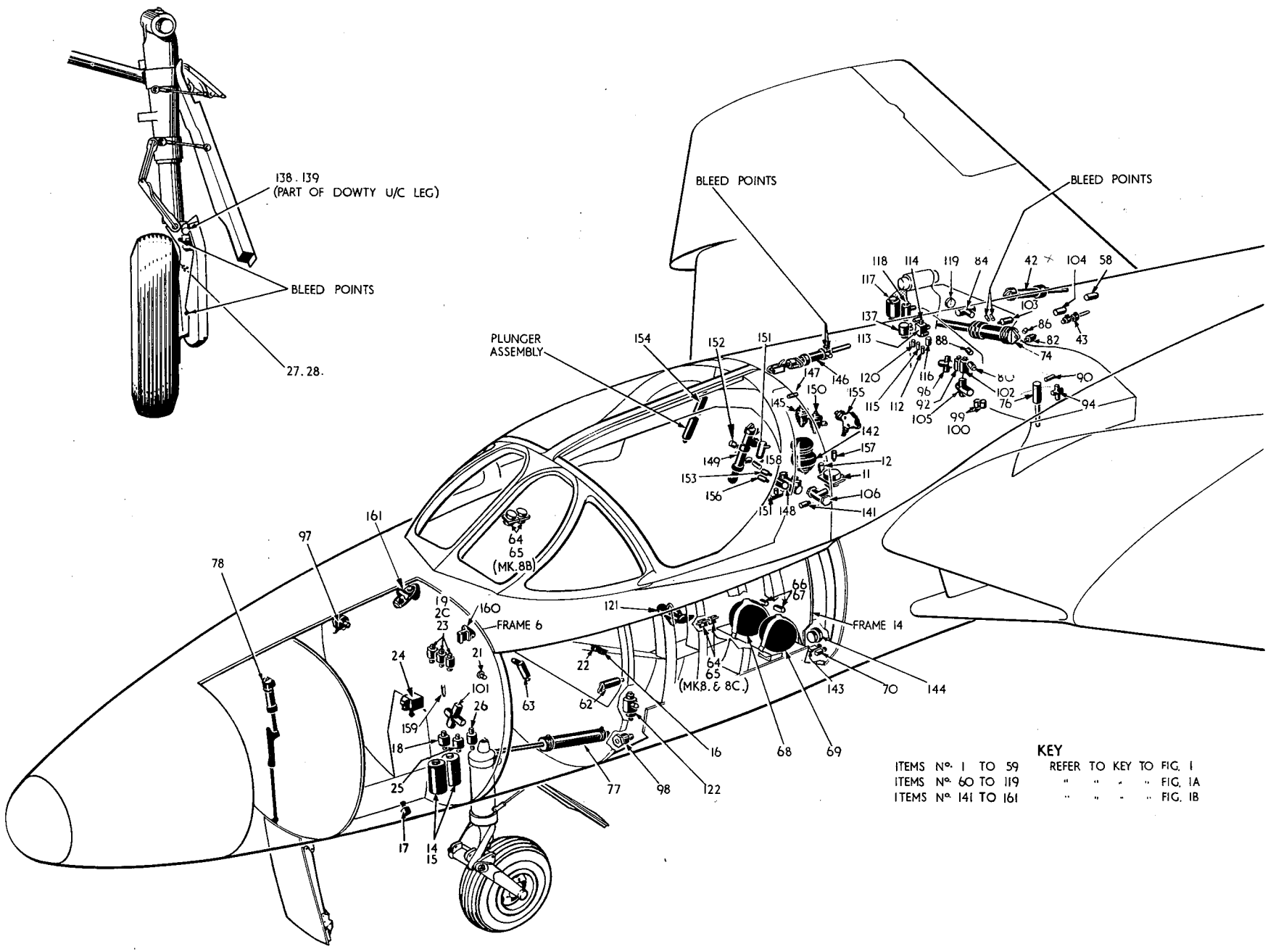

TP 15446-18745

Fig. 2 Hydraulic system installation (1)

made. In the event of hydraulic failure or when 'Manual' is selected, a spring loaded by-pass valve opens when the pressure falls to 200 lb. per sq.in. and fluid is freely passed from one side of the jack piston to the other as the jack body is moved by the control column. The operation and circuit of the cut-out switches and indicators is described in Sect.5, Chap.1 and detailed information on the hydro-boosters will be found in A.P.4601A.

Elevator booster system

21. The elevator hydraulic booster jack and its linkage system is located between frames 52 and 55, just below the tail plane. The assembly is carried in a channel-sectioned beam bolted to brackets mounted on the frames and consists of a booster jack, locked release unit, servo valve and operating link, together with an input and output lever. The elevator control tube from the control column is connected to the input lever and the elevator to the output lever. A spring feel unit is incorporated in the control system. In general, the operation of the hydraulic circuit is the same as that for the ailerons *(described in paras.19 and 20)*. The linkage system and its operation is described in Sect.3, Chap.4. When the emergency system is used, the hydraulic accumulator provides for a limited number of reversals of the control column.

Wheel brakes

22. The hydraulically-operated wheel brakes are controlled from lever-operated controls, one of which is fitted on each control column handgrip. Differential control is obtained by means of a relay valve which is in connection with the rudder bar. In addition, Maxaret units are fitted, one to each main undercarriage leg, which permits the maximum braking efforts to be applied without the risk of the wheel locking. These anti-lock units consist of a valve regulated by a rubber-tyred flywheel in contact with the rim of its respective landing wheel. The units are incorporated in the hydraulic pressure line from the cabin controls to the associated brake units. The Maxaret units are sensitive to angular deceleration consistent with an approaching wheel lock. Under such conditions they off-load the hydraulic pressure applied to the brakes until conditions again return to normal. From the supply circuit, the hydraulic fluid passes through a non-return valve to the brake relay control valve. Two hydraulic accumulators, for emergency operation of the brakes in the event of hydraulic failure, are piped into the line from the non-return valve to the control valve. A branch pipe from this line is taken to a thermal relief valve which is in connection with the return line. From the brake relay control valve, pipes convey fluid to the Maxaret units and on to the brakes. Branch pipes from the brake supply lines connect with two pressure relays, which in turn, connect with two unions on the triple pressure gauge in the cabin. The third union on the gauge is in connection with the main hydraulic system pressure line via a pressure relay. Thus, the gauge registers the pressure existing in each brake unit and also the main system pressure. The accumulators, together with the air charging connection are mounted in the nose wheel bay. The air pressure in the accumulators is shown on the brake accumulator pressure gauge in the cabin. The procedure for charging the accumulators is described in Sect.2, Chap.2, and the pressure to which they are to be charged is given in the Leading Particulars.

Air brake

23. The air brake is operated by a hydraulic jack which is anchored at frame 50 and controlled by thumb switches, one of which is incorporated in each throttle twist grip. Full extension or retraction of the air brake is by selection, using the throttle-mounted switches, and no intermediate position is normally obtainable. The hydraulic circuit consists of a pressure regulator valve, two non-return valves, two single solenoid control valves, a thermal relief valve in the 'in' line, a pressure relief valve in the 'out' line and a pressure-operated switch. The pressure regulator valve is fitted between the pressure supply and the main non-return valve feeding the control valves to maintain sufficient pressure for the supply of the power controls during the period of extension and retraction of the air brake. A magnetic indicator in the cabin gives a white indication when the air brake is extended and black when retracted. On undercarriage DOWN selection *(owing to limited ground*

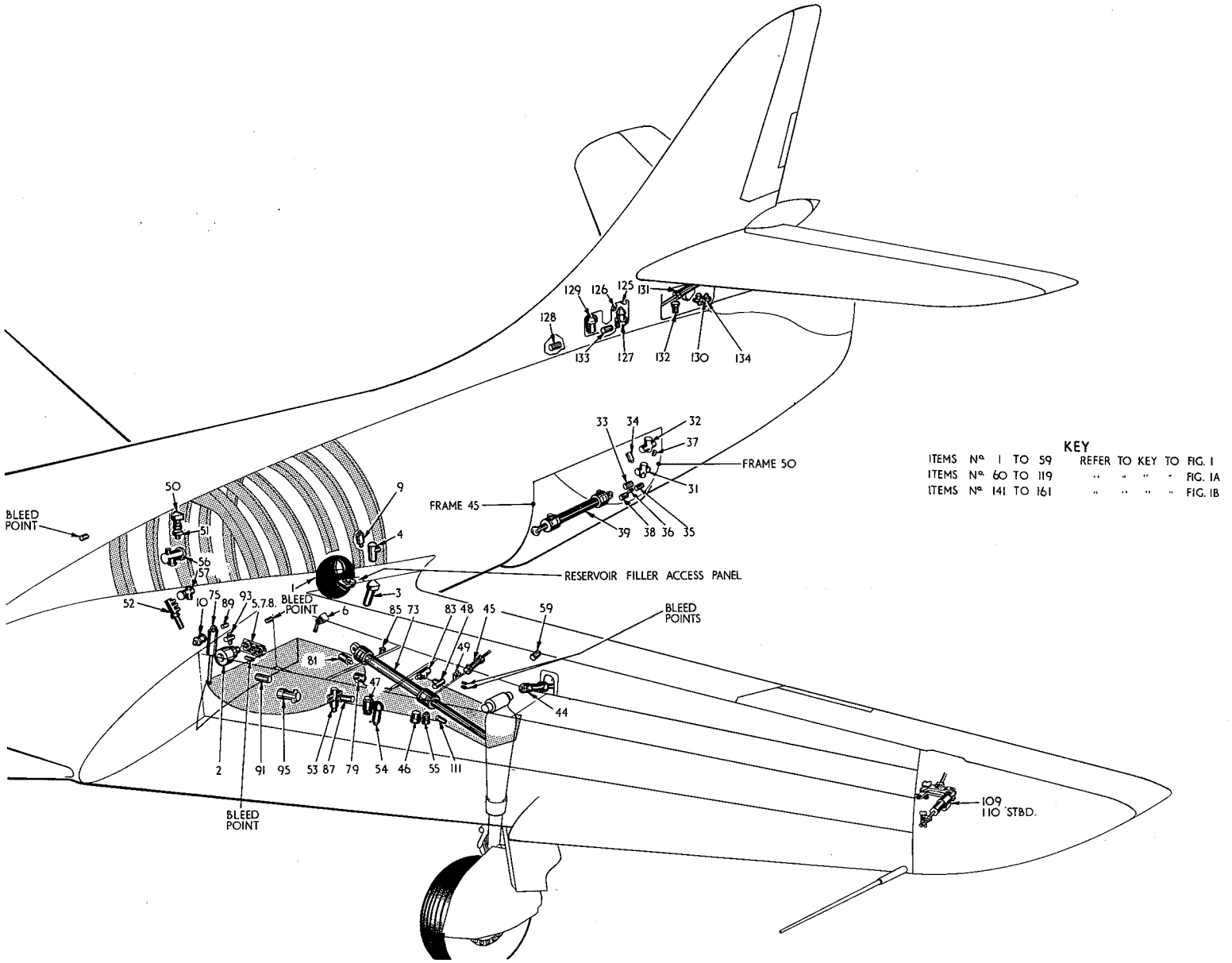

T.P.16485

Fig.3 Hydraulic system installation(2)

clearance) the air brake control switches are rendered automatically inoperative and the circuit disconnected so that the air brake automatically retracts to the 'in' position, if it is not already in that position. This condition is also obtained on operation of undercarriage emergency lowering by means of a microswitch operated by the undercarriage emergency air valve. On undercarriage UP selection, the air brake control switches in the throttle levers again become operative to permit control of the air brake through the electro-hydraulic control valves in the rear fuselage. The installation may, however, be tested on the ground while the alighting gear is down, by the operation of a spring return test switch in the cabin. Operation of this switch will permit partial extension and immediate retraction of the air brake each time the switch is moved to the ON position. This gives indication in the cabin by means of the magnetic indicator that the system is functioning satisfactorily.

Note . . .

Air brake IN must not normally be obtained by selecting undercarriage DOWN. On no account is full extension of the air brake on the ground to be obtained by fitting locks to the undercarriage jack and selecting undercarriage UP.

Operation

24. After the undercarriage has been raised, operation of the air brake switch on either throttle lever to the OUT position energizes the solenoid of the main control valve and the circuit is maintained after the switch is released by a hold-on relay *(Sect.5, Chap.1)*. The jack then extends the air brake by differential action at high speed until the rise in hydraulic pressure due to the load on the air brake causes the pressure switch to operate. Closing of the contacts of this switch energizes the solenoid of the high speed control valve, the circuit being maintained, when once operated, by the pressure switch 'hold-on' relay *(Sect.5, Chap.1)*. The jack then continues to extend to put the air brake 'out', but now at full power *(normal speed)*, until the 'fully-out' position is reached. In the 'out' position, if the air load on the brake produces a hydraulic pressure above the setting of the relief valve, this valve will lift and permit the air brake to retract, oil for the 'in' side of the jack being drawn through a non-return valve from the return line. Retraction of the air brake will cease when pressure drops to the re-seating pressure of the relief valve, and will extend again when the air load is reduced. On the operation of the air brake switch to the IN position, the 'in' relay is energized to break the circuit *(Sect.5, Chap.1)* and the jack will retract to bring the air brake to the IN *(closed)* position.

Cabin hood

25. The electro-hydraulically operated cabin hood is controlled from a three-position, spring-loaded centre-off switch, which is mounted, together with a hood lock indicator lamp, in the cabin. The switch is marked OPEN and CLOSE. A further centre-off switch, for external operation of the hood, is located in the nose wheel bay. The hood is provided with an inflatable seal which obtains its pressure air from the cabin pressurization system; it is raised or lowered on its hinges aft of frame 14, according to selection, by means of a hydraulic jack which operates in a channel located between frames 14 and 16 in the hood fairing. A further jack, located in the same fairing, is provided to operate the locks which secure the hood in the closed position.

Operation

26. Operation of the cabin hood control switch to the open position, energizes a solenoid control valve, thus causing the valve to direct hydraulic fluid to the hood locking jack which then operates to release the locks. At the end of its stroke, the jack operates a sequence valve which permits fluid to flow to the hood operating jack which then extends to open the hood. When in the fully open position, the hood is retained in that position by a hydraulic locking valve. When the cabin control is placed in the CLOSE position, hydraulic fluid is directed to the hood operating jack and to a sequence valve which is embodied in the jack structure. Hydraulic pressure then causes the hood locking valve to open, and the jack piston retracts to close the hood. When the jack is fully retracted the sequence valve operates, permitting fluid to flow to the hood locking

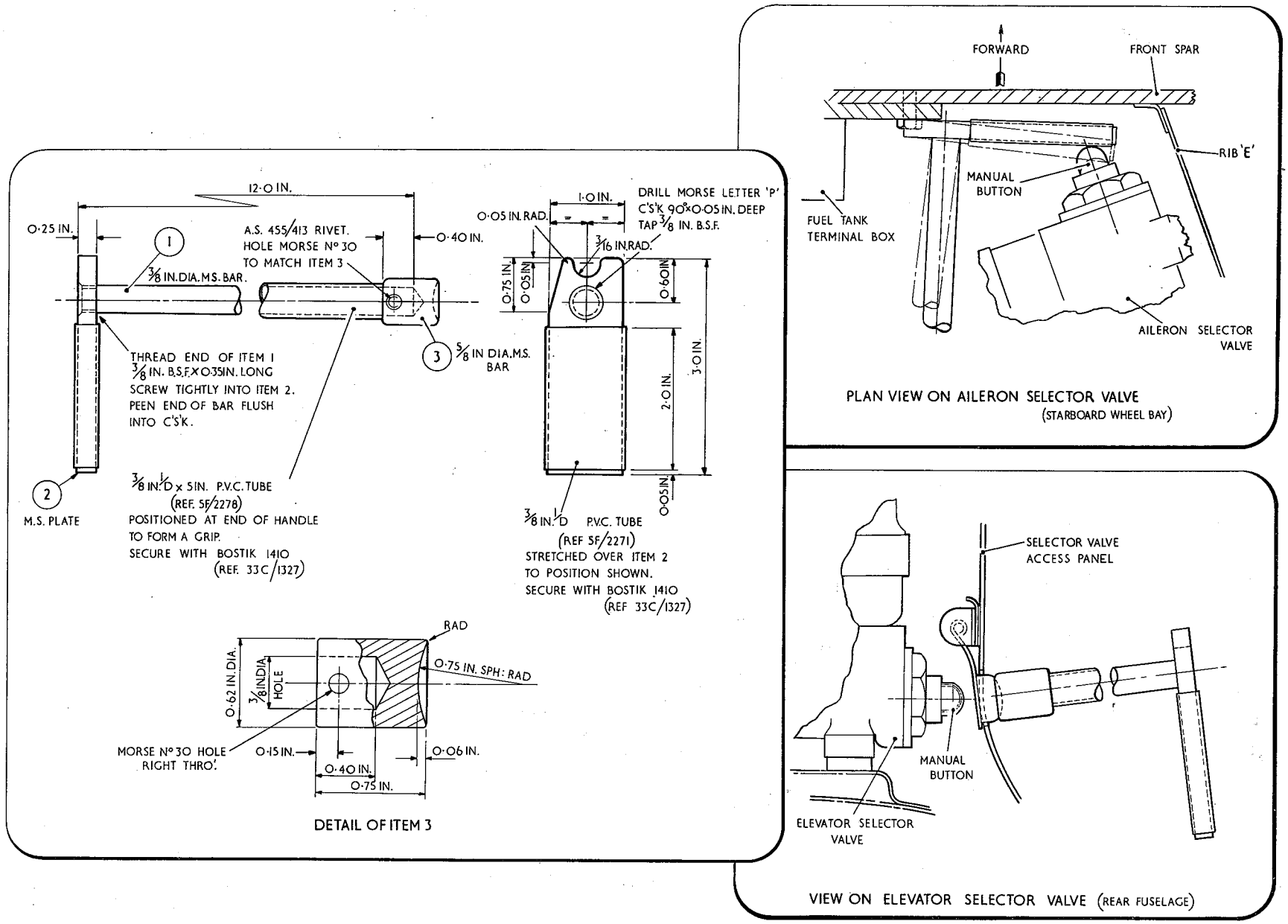

Fig. 3A Tool operating aileron & elevator selector valve

T.P.14158

RESTRICTED

jack which operates to close the locks and secure the hood. To prevent the hood from opening and closing too rapidly, restrictor valves are incorporated in the circuit and a sequence valve, non-return valve and restrictor is fitted to 'open circuit' the return side of the system and prevent unlocking pressure from building up when the hood is selected closed. The solenoid selector valve is of the 'open neutral – blind neutral' type giving the last operated position 'blind neutral', so that one side of the feed to the jack is locked off, and the other open to the return line. When the battery master switch is placed in the ON position, the supply to the hood control switch is isolated to render it impossible to open the hood inadvertently in flight, or to vacate the cabin before placing the battery master switch to the OFF position. When the hood is closed and locked, the shut solenoid of the hood control valve is maintained in the energized state by a supply fed via the hood torque shaft micro switch, and the hood locked indicator lamp is extinguished throughout flight as its supply is isolated when the undercarriage is retracted. For a full description of the hood electrical control circuit, reference should be made to Sect.5, Chap.1.

Provision for jettisoning the hood in an emergency *(Sect.1, Chap.3)* is provided, a sequence valve releasing hydraulic pressure from the jacks before jettison action takes place. The hydraulic accumulator, located in the hood fairing, provides the power for operation of the hood when the aircraft is on the ground and the engine, and consequently the hydraulic pump is not running. Either the cabin control switch, or the external switch *(para.25)* may be used to control the operation, but the battery master switch must be placed in the OFF or GROUND position before either switch can be used. The accumulator provides approximately two complete cycles of hood operation before the accumulator is exhausted. For details of the ground operation and emergency operation of the cabin hood, reference should be made to Sect.1, Chap.1 and 3.

Windscreen Wipers

26A. The windscreen wiper installation consists of wiper arms and blades pivoting from the lower corners of the windscreen centre frame and traversing an arc of 40 deg. to port and starboard over the respective centre panels. The blades are kept parallel to the centre line of the windscreen, during operation, by links connected to a fixed lever at the blade and to a pivot point near the wiper arm pivot point. The wiper arms are connected by linkage to a single Dunlop hydraulic motor, mounted on a bracket attached to frame 6. A control valve, also mounted on frame 6, operated by a knob marked 'PARK' and 'TURN TO RUN', with an arrow showing the direction of turn, located on the port side of the instrument panel, passes fluid under pressure to either one of two connections on the motor according to the position of the control knob.

Operation

26B. Fluid from the pressure side of the hydraulic circuit is fed by piping to the control valve from where it passes, according to the position of the control knob, to the motor. In the 'PARK' position, fluid passes through the control valve to the windscreen wiper motor to hold it in the locked position. In the 'TURN TO RUN' position, the control valve is turned, closing the original duct in the valve and opening two further ducts, one feeding fluid under pressure to the inlet side of the motor, causing the motor to operate and the other passing the pressure in the 'PARK' line of the motor back, through the controller to the return side of the system. Fluid from the exhaust side of the motor, passes through piping and a non-return valve to the return side of the main circuit.

SERVICING

General

27. Scrupulous cleanliness is essential during all servicing of the hydraulic system. Fluid used for topping up the system must be added using the Risbridger Replenishment Gun or the Pressurised Fluid Replenishment Can. Fluid drained from the system during bleeding must not be put back into the system. When pipe lines are disconnected, the unions and pipe-ends must be immediately blanked off with blanking caps to exclude the ingress of dirt or moisture. *Masking tape, rag, or material of a fluffy nature must not be used for this purpose*. All disconnected pipes must be flushed out with clean hydraulic fluid prior

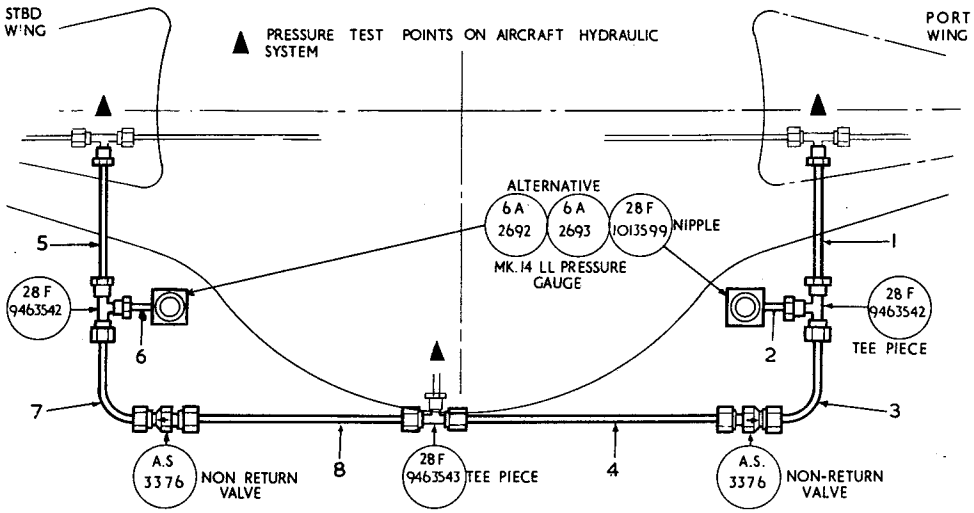

ITEM NO.	DESCRIPTION		MATL		ENDS	O/D IN.
1	TEE PIECE (PORT WING) TO TEE PIECE		TUNGUM D.T.D. 323A	22 S.W.G.	A A	3/16
2	TEE PIECE TO PRESSURE GAUGE	PORT			A-A	3/16
3	TEE PIECE TO NON RETURN VALVE	PORT			A-A	1/4
4	NON RETURN VALVE TO TEE PIECE	PORT			A-A	1/4
5	TEE PIECE (STBD WING) TO TEE PIECE				A-A	3/16
6	TEE PIECE TO PRESSURE GAUGE	STBD			A-A	3/16
7	TEE PIECE TO NON RETURN VALVE	STBD			A-A	1/4
8	NON RETURN VALVE TO TEE PIECE	STBD			A-A	1/4

O/D IN.	END A	
	OUTER SLEEVE	COLLAR
3/16	28F 9128936	28F 8011890
1/4	28F 8011819	28F 9439531

TEST INSTRUCTIONS (USE THE HAND PUMP ONLY)

1. CHECK THAT THE FLAP JACKS AND INTERCONNECTION CIRCUITS ARE CORRECTLY ADJUSTED
2. CONNECT THE TEST EQUIPMENT TO THE HYDRAULIC SYSTEM AS SHOWN ABOVE
3. LOWER THE FLAP
4. CHECK THAT THE PRESSURE GAUGES READ BETWEEN 2000 – 2350 lb/in²
5. RAISE THE FLAP
6. CHECK THAT THE PRESSURE IN BOTH GAUGES HAS DROPPED TO 450 – 550 lb/in²
7. IF EITHER GAUGE STILL SHOWS A HIGH PRESSURE (2000 - 2350 lb/in²) WITH THE WING FLAP FULLY CLOSED. ADJUST THE TAPPET (REFER TO DETAIL A) UNTIL THE PRESSURE DROPS
   NOTE:- THE PORT FLAP SELECTOR VALVE RELIEVES THE PRESSURE IN THE STARBOARD GAUGE AND VICE VERSA
8. REMOVE ALL TEST EQUIPMENT AND REPLACE EXISTING BLANKING CAPS

NOTE:-

THE FLAP MAIN JACKS ARE CAPABLE OF OVERRIDING THE FLAP SYNCHRONIZING JACKS, SHOULD THE LATTER BE CONNECTED TO OPERATE IN THE OPPOSITE SENSE. THEREFORE, WHENEVER THE SYNCHRONIZING JACK SYSTEM IS DISTURBED A CHECK FOR CORRECT SYNCHRONIZATION MUST BE MADE WITH ONE OR BOTH FLAP MAIN JACKS DISCONNECTED, WHILE OBSERVING THE MOVEMENT OF THE SYNCHRONIZING JACKS

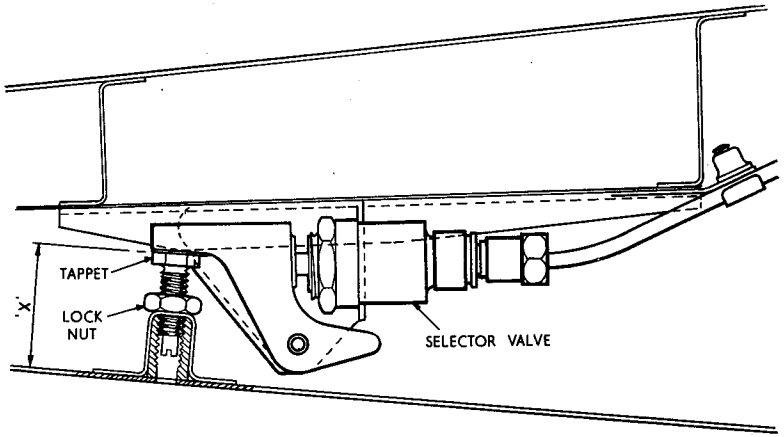

DETAIL A

SELECTOR VALVE ADJUSTMENT

1. ENSURE THAT THE TAPPET IS SCREWED FULLY BACK INTO THE CHANNEL SECTION SO THAT DIMENSION 'X' IS A MINIMUM
2. WITH THE FLAP FULLY CLOSED. SCREW THE TAPPET UP UNTIL THE SELECTOR VALVE "BLOWS OFF"
3. LOWER THE FLAP TIGHTEN THE LOCK NUT AND LOCK THE TAPPET HEAD WITH 22 SWG STAINLESS STEEL WIRE D.T.D 189 OR 161

Fig. 4 Flap synchronization test rig

to re-assembly. When drain plugs or other components are removed, they must be examined carefully to ensure that they are clean before being re-assembled in the system. When using a hydraulic servicing trolley for testing the system, ensure that a micronic filter is in circuit, and that the filter is clean. If the filter is dirty, it should be discarded and a new filter fitted. *This is very important.* Care must be taken to ensure that one-way components are correctly fitted. If unsure of the direction of flow, consult the hydraulic circuit diagram or seek assistance.

Note...
Hydraulic fluid is detrimental to paint, rubber, electrical cables etc., therefore, great care must be taken to ensure that no fluid is spilled on such parts.

Power control selector valves override device

27A. The aileron and elevator selector valves are fitted with an override device which enables POWER OFF' to be selected manually when the aircraft is on the ground. This ensures that it is always possible for servicing operations to be carried out by use of the hand pump, the delivery from which is insufficient, without the override, to close the hydro-booster by-pass valves. The procedure is as follows:-

(1) To select 'Manual' with electrics available, select 'POWER OFF', then depress the button located at the solenoid B end of the selector valve. The hand pump will now be capable of building up hydraulic pressure.

(2) To select 'Manual' without electrics being available, remove the dust cap from solenoid A on the selector valve, depress the solenoid adjuster and then the manual selector button. The hand-pump will now be capable of building up the required hydraulic pressure. A tool as shown in fig. 3A should be used to operate the buttons on the selector valves.

Note...
Only 20 lb pressure approximately, is required to operate the Manual selector button and this can only be accomplished if there is no system or accumulator pressure. If the button feels solid or springy, undue pressure should not be applied as this indicates that hydraulic pressure is still available.

For ease of operation of the override device on the elevator selector valve an external push button flap is fitted on the port side of the fuselage, forward of frame 55. The aileron valve is accessible through the starboard wheel bay.

Hydraulic reservoir

28. The procedure for refilling the hydraulic reservoir is described in Sect 2, Chap 2. The type of oil to be used is given in the Leading Particulars.

Emergency air cylinders and hydraulic accumulators

29. The procedure for re-charging the emergency air cylinders and hydraulic accumulators, which form part of the hydraulic system installation is described in Sect 2, Chap 2.

Lubrication

30. For the lubrication of the rubber sealing rings, gland rings, etc., grease XG-315 is to be used. For all bearings, hinge pins, etc., unless otherwise stated in the appropriate chapter, use XG-287.

Faults

31. Faults in the system may be caused by defects in either the hydraulic or electrical systems. Complete stoppage of the system is unlikely but, if occurring, could be due to failure of the pump, obstruction in the pipe line between the pump and control valve, fracture of a pipe line and consequent loss of fluid, or a blocked filter. Faults in the hydraulic system can also be caused by particulate contamination produced by normal system wear or component failure. In all cases of unsatisfactory operation, the reservoir should be checked for correct level. Generally, faults can be traced by observing the functions of the system as a whole and localizing the cause, this procedure should always be adopted before dismantling components for inspection. Investigation of faults should be considered in accordance with the instructions given below.

Loss of pressure

External leakage

32. Keeping the installation clean will facilitate the location of external leakage.

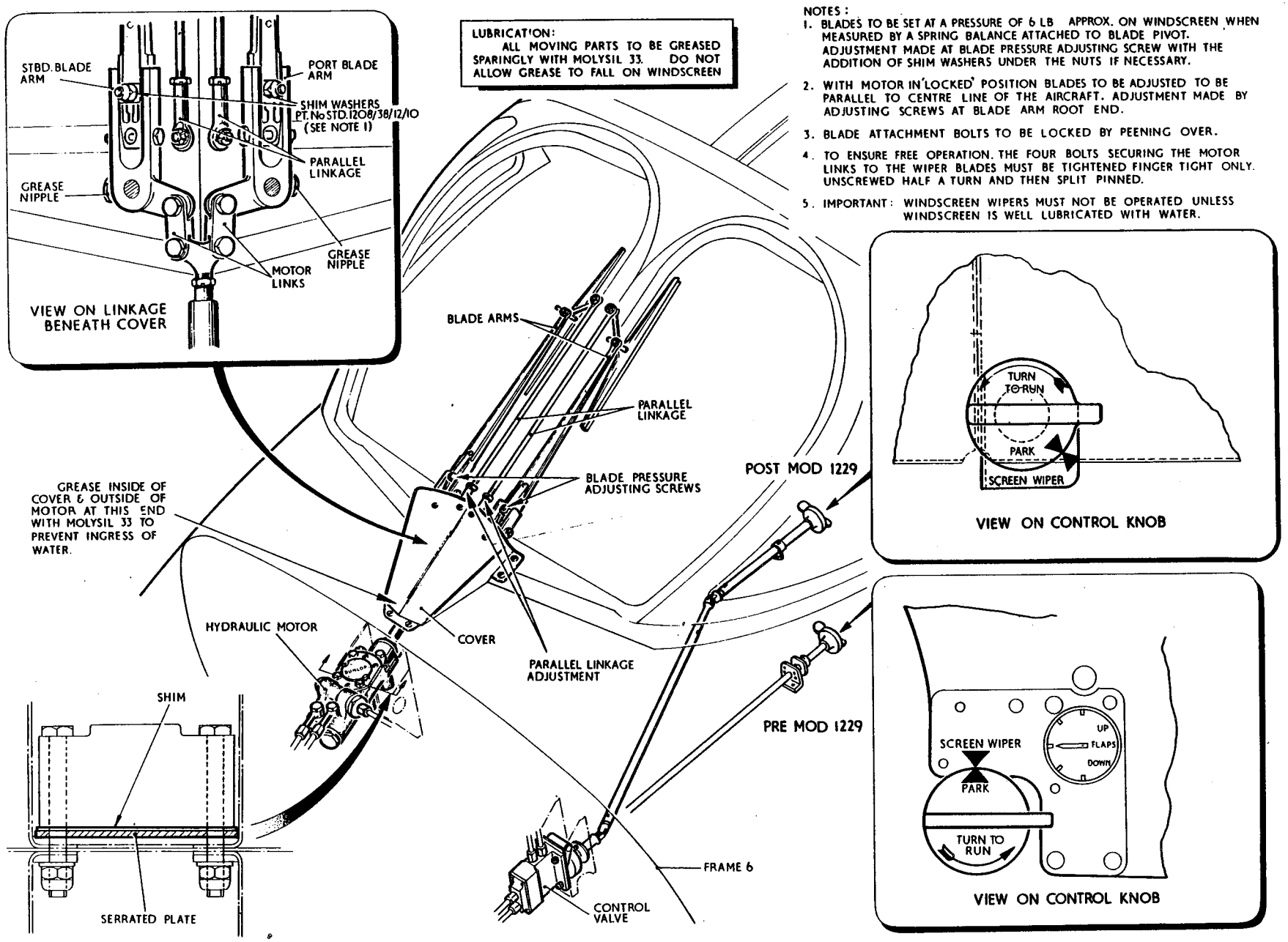

Fig. 5 Windscreen wiper installation

18886–20814

Such leakage occurring in a component should be dealt with in accordance with the instructions given in the handbook for the component concerned. In some cases, leakage may occur at a pipe coupling where a metal-to-metal joint is made and may possibly be remedied by tightening the unions, but care must be taken to avoid over-tightening. If normal tightening is ineffective, examine the belling of the pipe. If faulty, the pipe must be renewed. Where adaptors and plugs are concerned these must not be tightened unless permitted in accordance with the instructions given in the handbook for the component concerned.

Note . . .

Tightening will not cure a leak which is due to a defective sealing ring. The only remedy in such cases is the renewal of the defective component.

33. Generally, pipe leakage is a rare occurrence and would, usually, be the result of external abrasion at points where the pipe passes over structural members. It is essential, therefore, to ensure that all pipes are securely clipped to structure with which they are in contact to eliminate the possibility of chafing.

◀ **33A.** Units are authorised to locally manufacture flexible hoses for the pressure and return lines at the aileron and elevator powered flying control units (PCFUs) and at the transport joint, frame 40. Details are given in the Topic 3A and Topic 6.

Note . . .

The main cause of PFCU hose chafing is fouling of the hose on the hose guards. During installation, therefore, it is essential that two spanners are used to prevent the hose fouling the guard when tightening the end fittings. A check must be carried out for clearance between the hose and hose guard over the full range of movement in manual and powered modes.

Internal leakage

34. Internal leakage will cause sluggish or erratic movement in the particular circuit and possibly, creeping from the selected position. Creeping may also be due to leakage past a non-return valve in the circuit. The remedy is to remove and test any suspected component in accordance with the instructions given in the manual for the component concerned.

Air in the system

35. Air in the system may be detected as follows:-

(1) Sluggish operation.
(2) Backlash at flaps or fairing doors, etc.
(3) Backlash or sponginess when using the handpump.

To expel the air, it will be necessary to bleed the faulty circuit *(para.36)*.

Bleeding the system

36. On re-assembly of any circuit it must first be primed with clean hydraulic fluid to the specification given in the Leading Particulars, and the handpump operated until all air is expelled from the circuit through the bleed screws on the components, or by loosening or disconnecting couplings. *The reservoir should be constantly topped up during bleeding operations, otherwise more air will be introduced into the system through the suction line in the reservoir.* The complete aircraft hydraulic system is to be bled as follows *(when a particular circuit or circuits only are to be bled then only those sub-paragraphs relevant to the circuit or circuits need be complied with):-* ▶

(1) Jack up the aircraft with its wheels clear of the ground.
(2) Inflate all accumulators to the inflation pressures shown on adjacent labels.
(3) Fill the reservoir.
(4) Select undercarriage DOWN and operate by means of the handpump.
(5) Bleed from the undercarriage jacks and then from the fairing door jacks by means of the bleed screws on the components.
(6) Fit locks on the main and nose undercarriage legs. Select undercarriage UP and bleed the undercarriage jacks. The fairing door jacks should then be bled by depressing the plungers of the sequence valves in the wings and nose wheel bay, restraining the doors from retraction by manual pressure on the doors.
(7) Tighten all bleed screws.
(8) Bleed the main flap jacks in both the flaps UP and flaps DOWN position by means of the bleed screws in the wheel bays. The flap interconnection

jacks should be bled after they have been adjusted for travel *(Sect.3, Chap.4)*. Disconnect the flap operating jacks at the flap levers. To bleed the port down lines, the starboard flap should be raised and vice versa. *It is essential that the flap interconnection circuit is completely free from air, otherwise 'out of balance' will result between port and starboard wing flaps.* Tighten all bleed screws and reconnect operating jacks.

(9) To bleed the Maxaret units, the landing wheels should be removed and the return lines disconnected. This procedure enables each unit to be bled through its own return line by rotating the Maxaret wheel smartly by hand in the direction of the arrow on the unit's nameplate and then bringing the wheel to rest. Each time the wheel is stopped a small quantity of fluid will be released from the exhaust connection. This sequence should be repeated until the fluid expelled is clear and free from air. Re-connect the return line. The brake units should then be bled in the normal manner by means of the bleed screws on the components.

(10) Ensure that no pressure exists in the system. Mount the bleed clamp *(Ref. 27VA/3303, Part No. ACO/5928)* on the port hydraulic brake pressure relay in the brake triple pressure gauge line *(clamp about the base of the cylinder and adjacent to the integral connection. The clamp should contact the cylinder in the area between the two shallow grooves)*. Using an Allen Key, or Unbrako wrench measuring 5/32 in. across the flats, tighten the two socket-headed clamp screws. *(Excessive torque is not necessary, conventional use of the recommended wrenches producing the necessary clamping force.)* Slacken the pipe coupling in the port brake pressure gauge line at the gauge. Generate main system pressure by means of the handpump and operate the brake lever on the control column to the brakes ON position and lock. Move the rudder bar to port and bleed the gauge line until air-free fluid flows from the loosened coupling. Tighten the coupling whilst the flow is maintained. Dissipate the pressure in the system by operating the brakes a number of times, remove the clamp from the port relay and fit it to the starboard relay. Slacken the pipe coupling on the starboard gauge line at the gauge, build up system pressure again and move the rudder bar to starboard, apply the brakes and lock. Bleed the starboard gauge line until air-free fluid flows from the loosened coupling. Tighten the coupling whilst the flow is maintained. Remove the clamp from the relay and check the brakes for correct operation.

(11) The system pressure gauge circuit is the same as the brake gauge circuit, apart from the addition of a choke between the pressure relay and gauge connection. When bleeding the circuit, it will be necessary to open the choke and clamp the relay. To open the choke, first ensure that there is no pressure in the circuit, then unscrew the two halves of the choke, not more than half a turn, in order to allow fluid to by-pass the choke. Fit the clamp to the relay, loosen the pipe coupling at the gauge and generate system pressure as for the brake gauge line, ignoring any leakage at the choke, until air-free fluid flows from the loosened coupling at the gauge. Whilst flow is still maintained tighten the pipe coupling and then the choke. Remove the clamp from the relay.

(12) Disconnect the pipes from the power booster units and flush the circuit by continual operation of the handpump and replenishment of the reservoir until fluid flows free of air. Reconnect the pipes, loosen the bleed plugs and operate the circuit until air-free fluid flows from the bleed points. Tighten the bleed plugs. Check the circuit for correct operation.

(13) Loosen the bleed plugs on the air brake jack and operate the handpump until air-free fluid is expelled from the bleed points. Tighten the bleed

plugs and check the circuit for correct operation,

(14) Loosen the bleed plugs on the hood circuit jacks and operate the hand-pump until air-free fluid is expelled from the bleed points. Tighten the bleed plugs and check the circuit for correct operation.

(15) Lubricate the windscreens with water. Disconnect the return pipe from the windscreen motor, with the wind-screen wipers selected to 'RUN' operate the handpump until air-free fluid is expelled from the return con-nection. Re-connect and lock the return pipe. Check the circuit for correct operation.

(16) When a micronic filter is replaced, the system must be bled through the bleed point at the rear of the hydrau-lic handpump.

(17) When all bleeding of the system has been satisfactorily completed the hydraulic reservoir must be finally topped up to the correct level.

Bleeding after use of emergency controls

37. When the emergency high-pressure air system control has been used, the valve must be re-set and the individual system *must* be bled of air before the next take-off. Care must be taken to ensure that the reservoir filler cap is slackened off and the bleed plugs slackened sufficiently to release all pressure before any selection is made. When all pressure is released, prime and bleed the appropriate system *(described in para.36).*

Testing air brake on ground *(Undercarriage down)*

38. Operation of the spring-return test switch, mounted in the cabin, in conjunction with a micro-switch operated by the air brake permits partial extension *(about 15 deg.)* of the air brake and immediate retraction each time the switch is moved to the ON position. This gives indication in the cabin by means of the magnetic indi-cator that the system is functioning satis-factorily. *Ensure that the area below the air brake is clear of obstruction and that no personnel are in the vicinity before carrying out this operation.*

Testing air brake on the ground *(Under-carriage up)*

(Refer to Warning, para.41)

39. Operation of the air brake by means of the normal control on either throttle lever will give full travel at high speed. To check the operation of the high speed control valve short out the pressure-switch *(by means of a link across terminals AB.6 and 8 at TB.47 on frame 45, port rear fuselage)* and check that low speed operation is obtained. Remove link after test. To check the operation of the pressure switch, connect a suitable lamp *(24 volt, 3 watt)* across the above terminals, which lights on selection of air brake OUT. Use hand-pump to check pressure at which switch operates *(i.e. lamp goes out).*

Checking the flap pressure regulating valve

40. Whenever a flap pressure regulating valve is renewed, or is replaced after removal, it must be checked for correct adjustment and functioning as follows:-

(1) Jack up the aircraft with the wheels clear of the ground *(Sect.2, Chap.4).*

(2) Into the pressure supply line, fit an external pressure gauge, reading up to 4 000 lb. per sq.in. at 100 lb intervals.

(3) Run the hydraulic rig at slow speed and check that all services are operative.

(4) With the services non-operative and supply pressure at 3 000 lb. per sq. in., flaps UP and power controls engaged, vigorously stir the control column to reduce pressure to below 1 000 lb. per sq.in., then select flaps full DOWN and note that as long as the supply pressure remains below 1 100 lb. per sq in., the flaps will not *operate. (If pressure cannot be re-duced below 1 000 lb. per sq.in., it may be necessary to select under-carriage UP in order to obtain the required drain on the supply pressure).*

(5) Allow the pressure to build up to a maximum again, with flaps UP. Select full flap DOWN, and immediately re-duce the supply pressure by operation of the power controls or undercarriage. When pressure drops to 1 000 lb. per sq.in., movement of the flaps should be arrested and should only continue

when pressure builds up to 1 100 - 1 150 lb. per sq.in., or above.

(6) Raise flaps, then switch off the hydraulic rig and allow pressure to drop to zero. Select flaps DOWN, and using the handpump, raise the supply pressure gradually and note the pressure at which the flaps commence to operate.

Blow-off pressure should be:-
1100 to 1150 lb. per sq.in. and the re-seating pressure:-
1 000 lb. per sq in.

If the valve setting is incorrect it must be adjusted as described in A.P.105B series.

Operational tests

WARNING

Before these are applied, the aircraft must be jacked up with the wheels clear of the ground.

41. Ensure that the accumulators and emergency air bottles are correctly charged with air and top up the hydraulic reservoir. When the system has been filled, each circuit must be tested. For this purpose, a hydraulic servicing trolley will be required, the pipes from the pump on the trolley being connected to the appropriate external supply couplings *(para.8)*. When connection is made, test each circuit for correct operation, as follows:-

(1) Select battery master switch ON.

(2) Run the hydraulic test rig and check that the pressure builds up to 2 800 to 3 000 lb. per sq.in.

(3) Switch off the test rig and check that the pressure falls due to the inherent leak in the flap and main undercarriage leg recuperator pressure reducing valves.

(4) Check that the hydraulic low pressure warning light and audio warning come on at 600-500 lb. per sq.in. as the pressure falls.

(5) Run the test rig and build up pressure to 2 800 to 3 000 lb. per sq.in.

(6) Ensure that all personnel and ground equipment, etc., are clear of the aircraft, select and operate each circuit in turn, checking for the correct functioning of the circuit, the indicator lights and mechanical indicators.

Note . . .

Before testing the windscreen wiper circuit the windscreens must be lubricated with water.

Testing emergency air system

42. At the inspection periods quoted in the Servicing Schedule, and prior to carrying out the operational tests mentioned in the previous paragraph, the emergency air system must be tested as follows:-

(1) Jack the aircraft clear of the ground *(Sect.2, Chap.4)*.

(2) Connect a ground servicing trolley.

(3) Arrange suitable receptacles under the vent pipes leading from the fluid jettison valves of the undercarriage and flap circuits to receive the fluid expelled from the jacks.

(4) Operate the undercarriage and flaps to the UP position *(after first ensuring that no personnel are in danger from the components being operated)*.

(5) Operate the emergency controls for the undercarriage and flaps *(Sect.1, Chap.3)* and see that the fairing doors open and that the main and nose undercarriage and the flaps move smoothly to the full 'down' position. Check that both the nose and main undercarriages are fully locked down.

Note . . .

When the emergency system is used, the flap selector valve is out of circuit. The flaps should, therefore, move down to the full 80 deg.

(6) After the tests have been satisfactorily completed the controls must be reset as follows:-

(a) *Flap emergency control.* Push the operating lever of the air release valve fully forward.

(b) *Undercarriage emergency control.* Position the microswitch actuating lever in its lowest position then push the operating lever of the air release valve fully down.

(7) Prime and bleed the system then carry out the normal operational tests *(para.41)*.

Testing the wheel brakes

43. After servicing the hydraulic circuit for the wheel brakes test the circuit as follows:-

(1) With the aircraft jacked up with the wheels clear of the ground, the wheel brake accumulator correctly charged and a hydraulic test rig connected to the external supply couplings, run the test rig and check that a pressure of 2 800 - 3 000 lb per sq in. is registered on the gauge.

(2) With the rudder bar neutral, operate the brake levers independently and check that 1500 - 1650 lb per sq in. pressure is registered on the triple pressure gauge for each brake and that both wheels cannot be rotated.

(3) Check the differential action of the brake relay control valve ensuring at extreme movement of the rudder bar that:-

(a) The braked wheel pressure is 1500 - 1650 lb per sq in.

(b) The unbraked wheel is free to rotate.

(4) With brake levers released, check that both wheels are free to rotate.

(5) Switch off the test rig.

(6) With the rudder bar neutral check the number of brake applications before the pressure gauge drops to 750 lb per sq in. Approximately 40 applications should be available.

Testing Undercarriage Emergency Up Selection

44. Test the emergency undercarriage up selection system as follows:-

(1) With the aircraft jacked up, wheels clear of the ground, and a hydraulic test rig connected to the external supply couplings. Check that the undercarriage selector switches are selected to DOWN.

(2) Remove No.3 fuse from the main fuse box to de-energize the undercarriage selector inter-lock solenoids (simulating weight on the main undercarriage legs).

(3) Run the hydraulic rig and check that 2800-3000 lb per sq in. pressure is available.

(4) Rotate the knurled ring on the instructor's undercarriage UP button clockwise.

(5) Select undercarriage UP and check functioning of circuit.

(6) Select undercarriage DOWN.

(7) Re-set the UP button, whilst keeping the DOWN button depressed, by inserting the Dowty re-setting tool into the small hole in the UP button and lightly pressing until the UP button is released.

(8) Repeat operations (4) to (7) on the pupil's selector switch.

(9) Switch off hydraulic test rig.

(10) Replace No.3 fuse in the main fuse box.

Pressure settings and adjustment of components

45. The pressure settings for all pressure relief valves are given in the Leading Particulars. The adjustment of the various components used in the system is described in the appropriate Air Publications listed in the front of this volume, but should a new pressure regulator be fitted into the flap circuit, or the circuit disturbed during servicing, the regulator must be checked for correct functioning after assembly as described in para 40.

Fluid decontamination

46. When the engine driven hydraulic pump has to be replaced due to internal failure, or a defect in the hydraulic system occurs which is thought to be caused by fluid contamination, the system fluid shall be decontaminated in accordance with the procedure detailed in AP101B–1300–5A3, Standard Servicing Procedures.

Draining the system

46A. The bulk of the hydraulic fluid can be drained from the system by use of the sampling tool connected to the by-pass coupling.

Filters

47. When servicing the main system filter through the access panel in the bottom of the fuselage, the unit must be drained before dismantling in order to avoid spillage of hydraulic fluid on adjacent components. A drain plug, with a nozzle end, is fitted to the base of the filter body for this purpose and a length of hose, reaching outside the fuselage, must be used when draining. On completion of servicing the plug must be retightened and wire locked. On aircraft in which modification 888 or 1146 has been incorporated the micronic filters, in the aileron and elevator power control circuits, are provided with a tell-tale device which indicates when the filter elements have reached the end of their useful life. The tell-tale consists of an indicator pin which is made to protrude out of the head of the filter casing as a result of the differential pressure set up across the filter element when the element is clogged sufficiently to be considered unserviceable. If, during the periodical examination of the filters as laid down in the Servicing Schedule, it is found that an indicator pin is protruding, the filter element must be replaced. After such replacement, the indicator pin must be pushed back into the normal position and the affected circuit primed and bled as described in para 36.

Note . . .

Under conditions of extreme cold, the resultant increase in the viscosity of the hydraulic fluid may cause the indicator pin to protrude irrespective of whether the filter element is clogged or not. In these circumstances an engine run should be made and the controls operated, after which the indicator pin should be pushed back into its normal position. If it should protrude again the element is unserviceable and should be replaced.

On filters pre-Mod 1307 (Fairey Mod F.H.B.172–*introduction of metal buttons*) the tell-tale indicators should be exercised approximately ten times, at intervals as laid down in the servicing schedule, by pushing the sensing piston, from the end remote from the red button, with the aid of a tool similar to that shown in fig.6. Where this exercising fails to leave the tell-tale device in a free position the complete filter assembly should be removed and replaced by a serviceable assembly.

Windscreen wipers

48. The windscreen wiper installation should be examined periodically for security of attachments and all moving parts lubricated. The angle and pressure settings of the blades should be checked and adjusted as necessary (*fig.5*). All parts should be kept clean, particularly the wiper blades, which, if dirty may cause scoring of the windscreen panels.

REMOVAL AND ASSEMBLY

General

49. In general, the removal of the hydraulic components from the aircraft and their re-installation is obvious. Before attempting any removals, however, the following precautions should be taken:–

(1) Before attempting to remove any hydraulic accumulator, dissipate the fluid pressure by operating the control of the component concerned and deflate the accumulator by means of the Schrader valve.

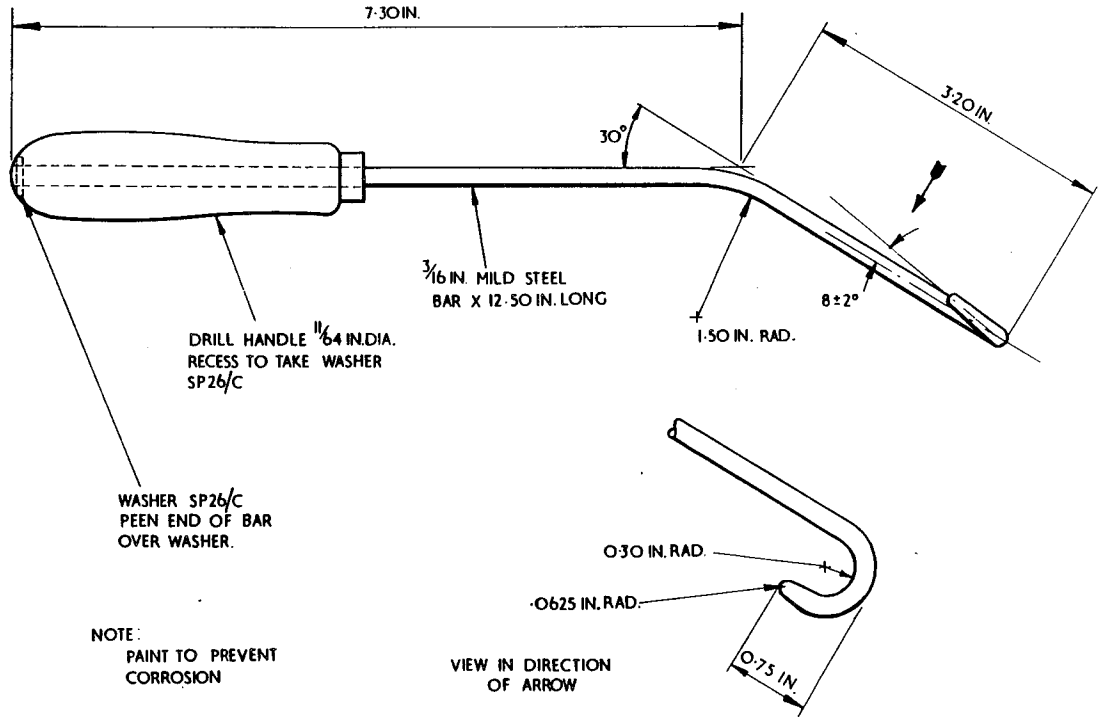

Fig. 6 Tool manipulating micronic filter tell-tale

(2) Ensure that the pipe ends and unions are suitably blanked off following the removal of any component.

Access to components

50. Access to the main components of the hydraulic system can be obtained as follows:–

Reservoir – Top rear fillet of port wing.
Handpump – Engine access door. Handle stowed in clips on door.
Air cylinders – Cabin – aft of ejection seats.
Accumulators:–
Brake – Nose wheel bay.
Cabin hood – Hood fairing.
Aileron – Starboard wheel bay.
Elevator –Spine fairing – rear fuselage.

Maxaret units

51. When re-fitting a Maxaret unit, the following precautions should be taken:–

Note . . .

The mountings of the Maxaret are interchangeable end for end, but it must be ensured that the Maxaret is always mounted with the fixed pivot end nearest to the rim of the aircraft landing wheel.

(1) Care must be taken to avoid misplacing the inlet filter of the unit which is a free fit within its inlet connection.

(2) The unit must be fitted so that the Maxaret wheel revolves in the direction of the arrow on the nameplate when the aircraft is moving forward.

(3) Bleed the Maxaret units and wheel brakes in accordance with para. 36.

(4) With the wheel removed and brakes applied. Spin and arrest the Maxaret unit flywheel and check that the brake is applied and released each time the flywheel is rotated and arrested.

(5) The Maxaret is spring-loaded on to the rim of the landing wheel. When changing a landing wheel, therefore, the Maxaret will move outwards past its normal position due to the action of the spring, and precautions must be taken to ensure that the Maxaret is held back to its base when replacing the landing wheel. Failure to do so will result in serious damage to the Maxaret.

Air brake jack

52. When refitting the flexible hoses to the air brake jack, adjust the position of the P.V.C. sleeves so that they just touch the sealing plates when the jack is fully retracted.

Flap emergency air valve release microswitch adjustment

53. This switch is released by the flap emergency air release valve lever, the lever being moved on pulling the emergency flap control. The switch is adjusted as follows:–

With the nuts and bolts securing the switch slackened off, the air release valve lever fully forward, insert a 0.12 in. feeler gauge between the switch plunger and the lever. Adjust the switch until the plunger is fully compressed. Tighten the nuts and bolts securing the switch and remove the feeler gauge.

Windscreen wiper motor and blade assemblies

54. The windscreen wiper blades should be adjusted as shown on fig. 5. When fitting a replacement windscreen wiper motor the position of the motor on its mounting is to be adjusted by means of the laminated shim Pt.No.D.239228 so that the motor actuating arm is in true alignment with the blade actuating arms.

Elevator accumulator charging valve

55. When fitting a replacement elevator accumulator charging valve (*complete*) or charging valve cap (*plug, outer sleeve, chain and split pin*) the cap attachment chain should be shortened to a maximum length of 2½ in. between the 'S' links, care being taken to correctly close the 'S' links on completion.

Micronic filters – STI/Hunter/385

56. Only micronic filters which have been subject to STI/Hunter/385 are to be fitted. Such filters are marked on the body in yellow paint "STI/Hunter/385".

This file was downloaded
from the RTFM Library.

Link: www.scottbouch.com/rtfm

Please see site for usage terms,
and more aircraft documents.