CHAPTER 1 PYROTECHNICS

(Completely revised)

LIST OF CONTENTS

	Para.
Introduction	1
Description	
Ejection seat	2
Hood jettison	3
Fire extinguisher	4
Inboard pylon	5
Turbo starter	6

Introduction

1. Pyrotechnics are included in the following equipment fitted to this aircraft:-

(1) Ejection seat.

(2) Hood jettison.

(3) Fire extinguisher.

(4) Inboard Pylon.

(5) Turbo starter.

DESCRIPTION

Ejection seat

2. Cartridges are fitted to each ejection seat. Reference should be made to A.P. 109 Group for a detailed description of the seat and method of fitting the cartridges.

Hood jettisoning

3. The hood jettisoning equipment includes a cartridge operated gun. Reference should be made to Sect.3 and to A.P.109 Group for detailed information.

Fire extinguisher

4. The fire extinguisher is operated by an electrically fired cartridge unit. Reference should be made to Sect.4 and to A.P. 957C for further information.

Inboard pylons

5. An explosive release unit is fitted to each inboard pylon. Reference should be made to A.P.1664E, Vol.1, for details of this release unit and safety precautions.

Turbo starter

6. The B.T.H. cartridge-operated turbo-starter contains three cartridges in its multiple breech. Three spare cartridges are stowed in a carrier mounted on the engine access door. For a detailed description of the starter, together with servicing information and the method of loading the cartridges, reference should be made to A.P.1181D.

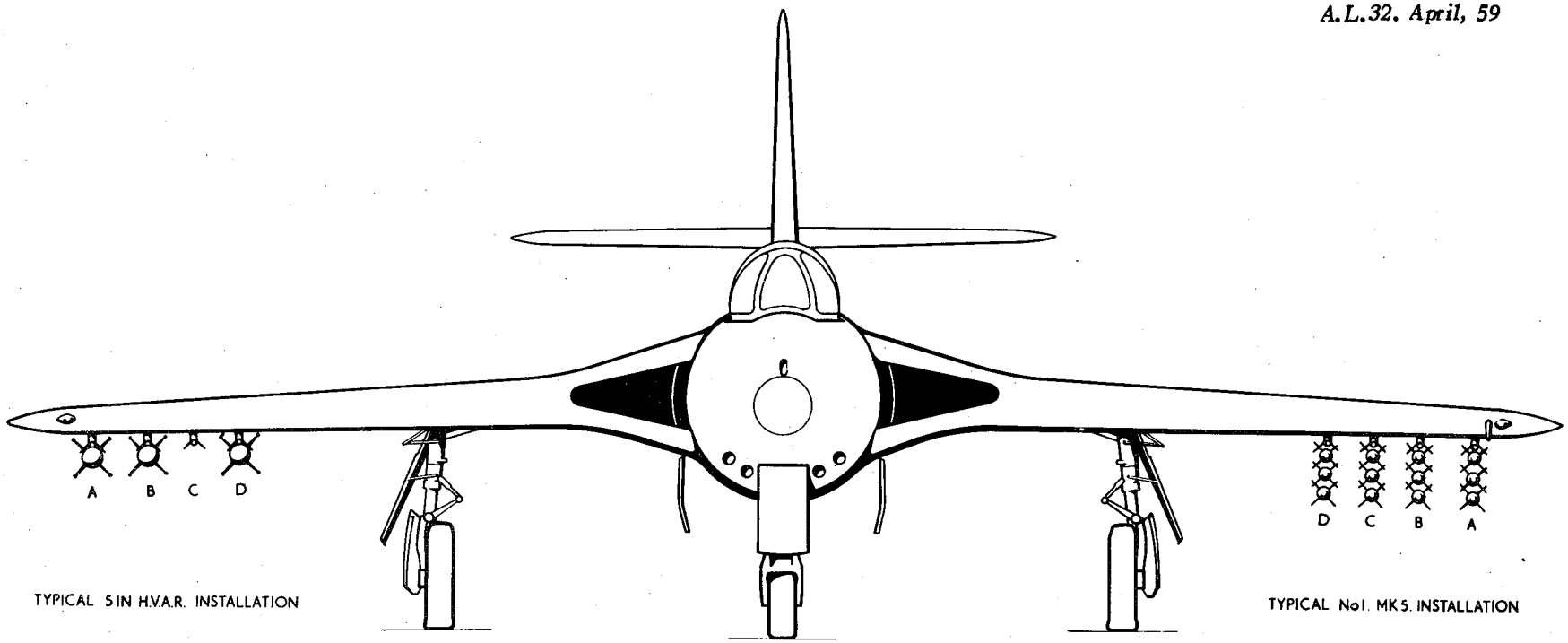

Fig. 3 R.P. installation

Typical alternative R.P. Stores

Type of R.P.	Max. Qty. carried
12 lb. head, 3 in. rocket motor No.1, Mk.5	All stations, triple tier
18 lb. head, 3 in. rocket motor No.1, Mk.5	All stations, triple tier
25 lb. head, 3 in. rocket motor No.1, Mk,5	All stations, triple tier
60 lb. head, 3 in. rocket motor No.1, Mk.5	All stations, single tier
5 in. H.V.A.R. (38 lb. or 52 lb. head)	Three stations, A, B and D in each wing, single tier

The above stores may be carried with or without inboard drop tanks carried on inboard pylons.

Appendix 1

R.P. EQUIPMENT POST MOD 1366 AND 1368

LIST OF CONTENTS

	Para.
Introduction	1
R.P. controls	2
SNEB rocket installation	3

Introduction

1. Post mod. 1366 and 1368 provision is made for the firing of SNEB rockets from MATRA launchers fitted to the outboard pylons. Fitting instructions for the MATRA launchers are detailed in Sect. 2, Chap. 2.

R.P. Controls

2. Controls for rocket firing consist of a bomb/RP selector switch (BOMBS–OFF–RP), a mode switch (RP RIPPLE–SALVO–SNEB) and a salvo selector switch (2, 4, 6, 8), all mounted on a panel on the port forward side of the cabin, and a firing push switch on each control column handgrip. In addition an inboard/outboard pylon selector switch on the port forward side is also used. The switch settings for the various modes of fire are as follows:-

Bomb/RP selector switch – RP
Mode switch – either RP RIPPLE, SALVO or SNEB as appropriate
Salvo selector switch – either 2, 4, 6 or 8 as required
Pylon switch – outboard for SNEB

SNEB rocket installation

3. The launchers for firing SNEB rockets are fitted to the outboard pylons. They are fully described, together with procedures for loading and off-loading in AP2802A, Vol. 1, Pt. 1 and 3, Sect. 1, Chap. 10A, and Sect. 2, Chap. 11 and 12. The aircraft armament circuit is described in AP101B–1304, 5 and 6–1B, Sect. 5, Chap. 1. It should be noted that when loading the launcher on to the pylon, that both jaws of the ejector release housing must be removed as described for loading external tanks (Sect. 2, Chap. 2)

Chapter 2 R.P. EQUIPMENT

LIST OF CONTENTS

	Para.
Introduction	1
Launcher rails	2
Mounting posts	3
R.P. controls	6
Attachment of removable parts	7
Armament safety break	9
Re-arming	10

LIST OF ILLUSTRATIONS

	Fig.
Launcher rail attachment	1
R.P. assembly	2

APPENDIX

	App.
R.P. equipment post mod 1366 and 1368	1

Introduction

1. This chapter contains a description of the R.P. installation on the aircraft, together with details for the removable parts. Information on the gyro gun sight and camera will be found in Sect. 5, Chap. 2 and a description of the electrical circuit, complete with wiring diagrams in Sect. 5, Chap. 1. Further information on rocket projectiles generally will be found in A.P.2802A, Vol. 1.

Launcher rails

2. The rocket projectiles are carried either singly or in tiers of up to three on each of four sets of launcher rails under each outer wing. The launcher rails are identified as rails A, B, C and D on each wing, rail A being outboard. The launcher rails are located on the underside of the wings as follows:—

Launcher rail A—outboard of rib R and across rib S.

Launcher rail B—between nose rib Q and rib R (*across main spar, necessitating the removal of the outboard pylon before the installation of the rail can be effected*).

Launcher rail C—between nose rib N and interspar rib Q (*across junction of nose rib P and interspar rib P with main spar*).

Launcher rail D—between nose rib L and nose rib N.

Mounting posts

3. Each launcher rail is attached to a pair of mounting posts which are themselves attached to the wing structure. The mounting posts are of tubular structure and have a top fitting which is machined at an angle to conform with the contour of the upper surface of the wing. Each post passes through the wing structure and terminates on the undersurface of the wing with an eye-end to which the launcher rail is attached by means of a high-tensile steel bolt. The rear posts are grooved at their lower ends to permit the assembly of the electrical cables which run from the wings to the rails. The posts are secured to the wing by means of a knurled bronze nut which screws on to the threaded portion above the eye-end. The bronze securing nuts are machined to a spherical shape at one end to fit into a corresponding recess in a light alloy washer interposed between the nut and wing skin, thus allowing the washer to align itself with the undersurface of the wing. Each bronze nut must be hand-tightened only.

4. Owing to the variation in depth and contour of the aerofoil, the posts, four front and

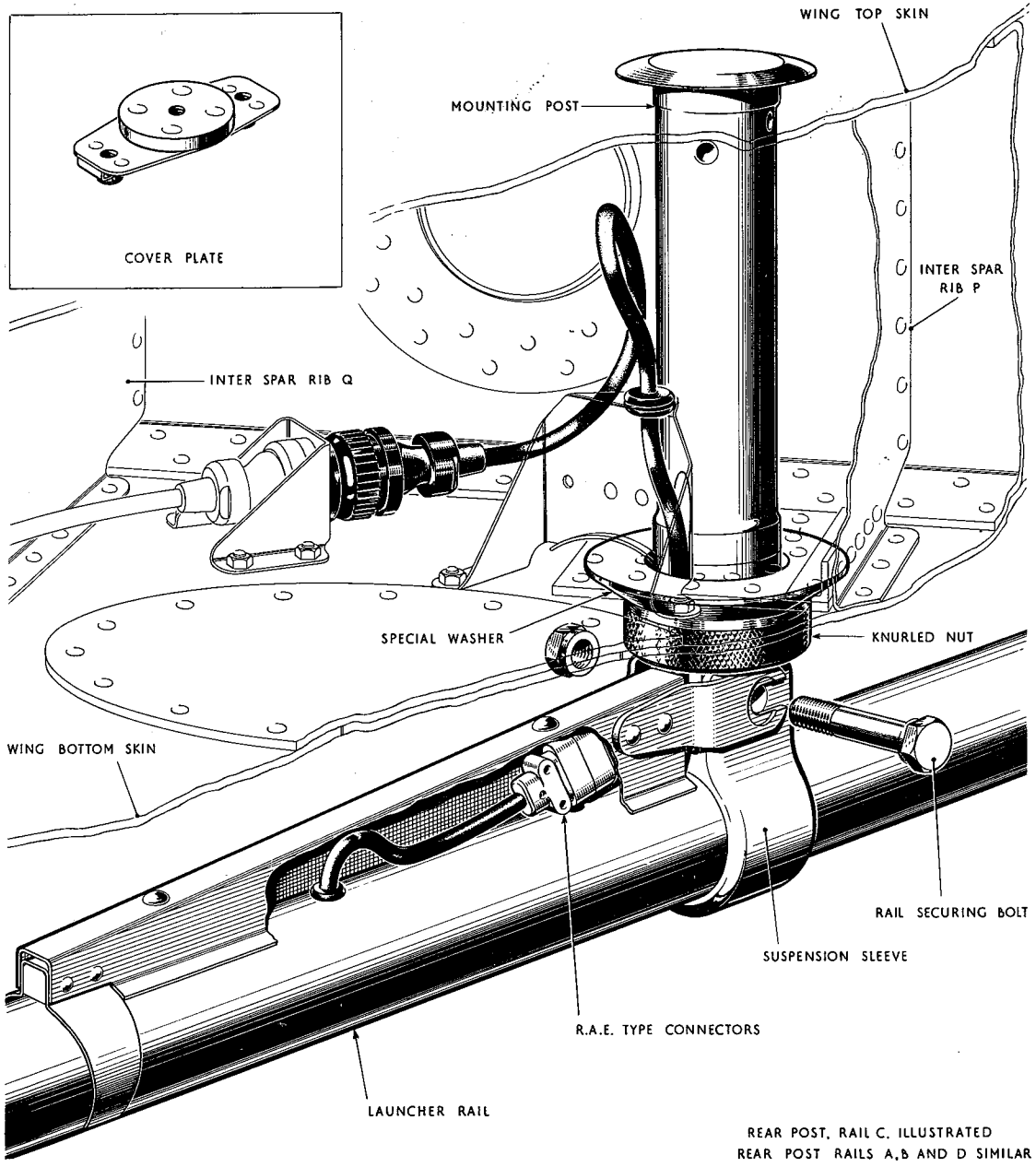

Fig. 1 Launcher rail attachment

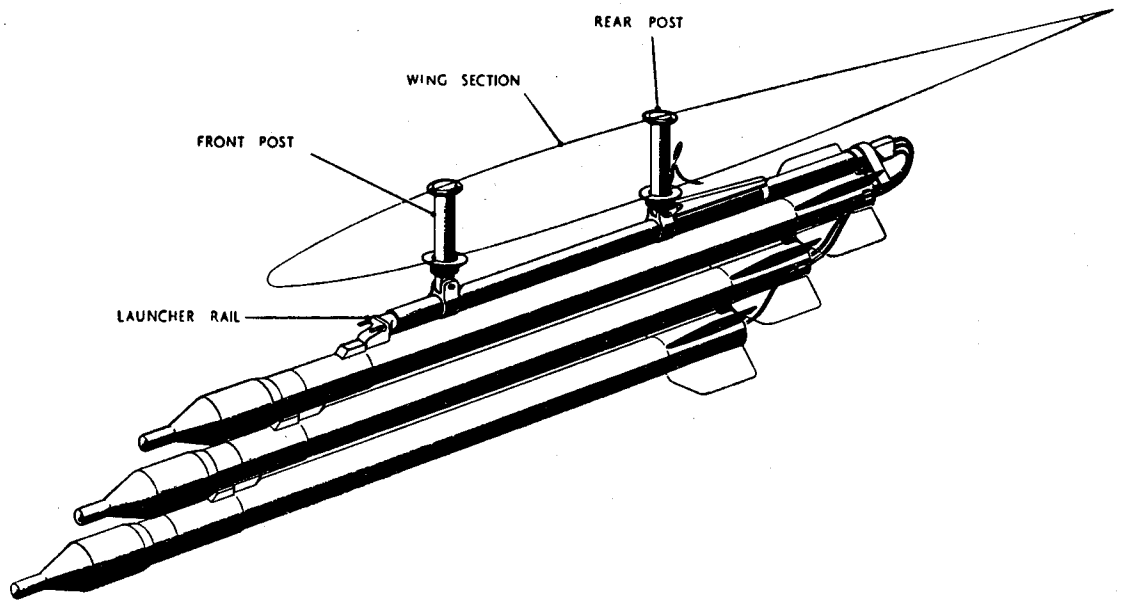

Fig. 2 R.P. assembly

four rear for each wing, are not interchangeable, either port or starboard, or with each other on their respective wings (*para. 8, sub-para. 1*). A cable cover is attached to each rear post and extends rearwards to clamp over the launcher rail. These cable covers are interchangeable.

5. Cover plates are provided to seal the holes vacated by the mounting posts when the R.P. installation is removed. The plates, which are provided with captive nuts, lie flush with the outer surface of the wing when bolted in position. A blind hole in each plate is threaded (2 B.A.) to receive a piece of screwed rod, or bolt, which is used to insert the plate into the post hole during the fitting of the plate. It also serves to hold the plate in position while the securing bolts are fitted, after which, the bolt, or screwed rod, is removed.

R.P. controls

6. The rocket projectiles are fired by depressing the Bomb/R.P. push switch on either control column handgrip, after the Bomb/R.P. selector switch has been placed in the R.P. position, and the salvo size selected by setting the selector switch on the R.P. selector panel. The projectiles may be fired in salvos of 2, 4, 6 or 8 according to selection. For more detailed information on the controls, refer to Sect. 5.

Attachment of removable parts

7. The front and rear mounting posts, launcher rails and the cable covers comprise all the removable parts. Before commencing to install the mounting posts, the cover plates (*para. 5*), which normally seal the mounting post holes in the wings, must be removed and their attachment bolt holes sealed by using the existing bolts with nuts (Pt. No. A.G.S.2002C1) and washers (Pt. No. S.P.16C) in lieu of the captive nuts on the plates. If the outboard pylon is fitted, and it is desired to install R.P.'s, this pylon must be removed and the necessary blanking plates fitted in lieu (Sect. 3, Chap. 2).

8. When assembling the mounting posts:—

(1) Ensure that the mounting posts are positioned correctly. (*The posts are engraved for port and starboard and have a numeral to indicate their respective rails. Similar indication is stencilled adjacent to the post holes on both the upper and lower surfaces of the wings*).

MOUNTING POST MARKING

POST		
FRONT	REAR	RAIL
PORT 1	P 5	PORT A
PORT 2	P 6	PORT B
PORT 3	P 7	PORT C
PORT 4	P 8	PORT D
STBD 1	S 5	STBD A
STBD 2	S 6	STBD B
STBD 3	S 7	STBD C
STBD 4	S 8	STBD D

(2) Before assembly of the rear posts, pull the electrical cables down through the apertures in the wings. These cables are stowed in the wings, when R.P. posts are not fitted, with the cable plug fitted into spring clips mounted on brackets adjacent to the rear post apertures.

(3) Before fitting the posts, lubricate the thread on the post, the spherical end of the nut and the spherical recess in the washer with grease XG-275.

(4) Tighten the bronze securing nuts by hand only.

(5) Fit the launcher rails to the eye-ends of the posts, using the special high-tensile steel bolts provided.

(6) Make electrical connection by fitting the cable plugs into the sockets of the launcher *(as shown in fig. 1)*. Fit the cable guards, which are secured by the rear post rail securing bolt.

(7) When assembly is complete, use 22 s.w.g. non-corrodible wire to specification D.T.D. 189 or 161 to lock the knurled nuts.

In the case of the front post, the wire is passed through the hole located between the threaded portion of the post and the eye-end. In the case of the rear post, the wire is passed through the hole in the end of the high-tensile steel bolt that secures the rail to the eye-end, the wire also serving to lock the nut of the rail securing bolt in the eye-end. The nut of the rail securing bolt in the eye-end of the front post must be locked with a split pin.

Armament safety break

9. An armament safety plug, located in the port stub wing, is accessible via a small hinged door fitted in a panel under the wing, just forward of the main spar pin joint. The door is provided with a toggle fastener to facilitate access. The plug, attached to a bracket by a nylon cord on which is fitted a bag and a red warning pennant, must be removed before stores are fitted and should only be put back immediately prior to take-off. When the plug is removed, place the plug in the stowage bag and allow the bag and pennant to hang below the door. On replacing the armament safety plug, stow the pennant and when fitting the plug ensure that the red paint mark on the body of the plug is aligned with a similar mark on the body of the socket. If this precaution is not observed damage will be caused to the plug.

Note . . .

The pennant must not be removed from the stowage bag.

Re-arming

10. The procedure for re-arming is given in A.P.2802A, Vol. 1.

This file was downloaded
from the RTFM Library.
Link: www.scottbouch.com/rtfm

Please see site for usage terms,
and more aircraft documents.