RADIO – EQUIPMENT MOUNTINGS

Ref. No.	Part No.	Description (1 2 3 4 5)	No. Off	Material Specification	M.R. Class of Store	Plate No.
	D.251302	EQUIPMENT MOUNTINGS FOR RADIO ASSEMBLY (Mod. 968)	–	–		
12594	A.250766	Angle, mounting	1	–	C.	ME.1
2713	A.188928	Bracket	4	DTD.364	C.	ME.1
2714	A.188929	Bracket	4	DTD.610	C.	ME.1
2715	A.188931	Bracket	2	DTD.364	C.	ME.1
2716	A.188932	Bracket	2	DTD.364	C.	ME.1
11822	B.236615	Bracing, at tie rod for battery mounting	1	–	C.	ME.1
	D.250492	Crate, for modulator unit, group	1	–		ME.1
	D.250492/1	Bearer, forward (Make from Std.1715/13)	1	–		
	D.250492/2	Bearer, aft (Make from Std. 1715/13)	1	–		
10381	B.234853	Bracket, mounting, control box	1	–	C.	ME.1
10380	F.235783	Hook (Make from Std.1531/1)	2	–	C.	ME.1
	B.250491	Platform, group	1	–		
2717	B.188916	Diaphragm, end, group	1	–	MR/C	ME.1
10376	F.236555	Fitting, fork	1	L.65C	C.	ME.1
10378	F.236556	Fitting, fork	1	L.65C	C.	ME.1
10374	F.236592	Rod, tie	2	MS Bar S1B	C.	ME.1
	C.250852	Support, bottom fittings, group	1	–		ME.1
11776	C.245301	Bearer, radio, forward	1	–	C.	
11226	C.245302	Bearer, radio, aft	1	–	C.	
11893	F.245354	Block, mounting	2	L.65C	C.	
	B.245424	Channel, support	2	DTD.610		
10377	F.236557	Fitting, fork	1	L.65C	C.	ME.1
10375	F.236558	Fitting, fork	1	L.65C	C.	ME.1
10AJ/157	–	Mounting, equiflex type 966	3	–	B.	
10AJ/162	–	Mounting, equiflex type 971	1	–	B.	
11892	B.245202	Plate, mounting	1	–	C.	
4211	Std.1687/2	Saddle	1	L.72	C.	5
	B.245425	Tray, damper	1	–		
	B.250735	Tube, support, bottom inboard	1	T.4 or DTD.464		
	B.250736	Tube, support, bottom outboard	1	T.4 or DTD.464		
	Std.1509/23/084	Tube, distance, 5/16" o/d x 17 S.W.G. x .84" long	2	T.4		4
	Std.1509/24/084	Tube, distance	4	T.4		4
	C.233384	Support, top fitting, group	1	–		ME.1
	B.250710	Bearer, radio mounting, forward, group	1	–		
10AJ/161	–	Mounting, anti-vibration, type 970	2	–	C.	
	B.250711	Bearer, radio mounting, aft, group	1	–		
10AJ/161	–	Mounting, anti-vibration, type 970	2	–	C.	
659	Marconi R.I.D.1004A	Catch, retaining	2	–	C.	
4098	Marconi R.I.D.1011/1/8B	Member, horizontal	2	–	C.	ME.1
10AJ/140	–	Mounting, equiflex type 951	4	–	C.	
28FP/9713920	Aviation Dev. A.411	Pin, pip	2	–	C.	
	A.188944	Plate, adaptor	4	DTD.610		
4096	Marconi R.I.D.1012/1/14B	Rack, R.H.	1	–	MR/C	ME.1
4097	Marconi R.I.D.1012/2/14B	Rack, L.H.	1	–	MR/C	ME.1
1188	A.188926	Support, fixed	2	DTD.610	C.	ME.1
1189	A.188927	Support, sliding	2	DTD.610	C.	ME.1
	F.186523	Washer	8	DTD.610		ME.1
10A/17930	–	Washer, check	4	–	C.	
	F.225024	Washer, profile	4	L.72		
4150	Std.915/C22	Washer	2	–	C.	4

RADIO – EQUIPMENT MOUNTINGS

Ref. No.	Part No.	Description 1 2 3 4 5	No. Off	Material Specification	M.R. Class of Store	Plate No.
		SUMMARY OF STOCK ITEMS				
28D/1010658	A.25.1B	Bolt, 4 B.A.	–	–	–	
28D/9436920	A.25.1C	Bolt, 2 B.A.	–	–	–	
28D/9133011	A.25.2C	Bolt, 2 B.A.	–	–	–	
28D/12534	A.25.9C	Bolt, 2 B.A.	–	–	–	
28D/12515	A.25.10C	Bolt, 2 B.A.	–	–	–	
28D/9419397	A.25.12C	Bolt, 2 B.A.	–	–	–	
28D/12537	A.25.14C	Bolt, 2 B.A.	–	–	–	
28D/9453970	A.25.15C	Bolt, 2 B.A.	–	–	–	
28D/1001121	A.25.16C	Bolt, 2 B.A.	–	–	–	
28D/1011029	A.25.1E	Bolt, 1/4" B.S.F.	–	–	–	
28D/1010031	A.25.8E	Bolt, 1/4" B.S.F.	–	–	–	
28D/1011244	A.25.9E	Bolt, 1/4" B.S.F.	–	–	–	
28D/1011245	A.25.10E	Bolt, 1/4" B.S.F.	–	–	–	
28D/12548	A.25.17E	Bolt, 1/4" B.S.F.	–	–	–	
28D/7002440	A.25.18E	Bolt, 1/4" B.S.F.	–	–	–	
28D/1013284	AS.1248-2C	Bolt, 2 B.A.	–	–	–	
28M/9403520	A.27.CP	Nut, 2 B.A.	–	–	–	
28M/10288	AGS.2001/C1	Nut, 2 B.A.	–	–	–	
28M/10290	AGS.2001/E1	Nut, 1/4" B.S.F.	–	–	–	
28M/10328	AGS.2002.C1	Nut, 2 B.A.	–	–	–	
28M/10330	AGS.2001.E1	Nut, 1/4" B.S.F.	–	–	–	
28M/12153	AGS.2007.B1	Nut, 4 B.A.	–	–	–	
28M/9435068	AGS.2008.E1	Nut, 1/4" B.S.F.	–	–	–	
28M/14347	AGS.2019.E1	Nut, 1/4" B.S.F.	–	–	–	
28M/803	AGS.120.A	Nut, wing	–	–	–	
28P/830	SP.4Y.B4	Pin	–	–	–	
28P/19225	SP.90.C3	Pin, split	–	–	–	
28W/9419474	SP.15.B	Washer, 4 B.A.	–	–	–	
28W/9419454	SP.10.C	Washer, 2 B.A.	–	–	–	
28W/9419475	SP.15.C	Washer, 2 B.A.	–	–	–	
28W/9419404	SP.16.C	Washer, 2 B.A.	–	–	–	
28W/9419405	SP.15.E	Washer, 1/4" B.S.F.	–	–	–	
28W/9419487	SP.16.E	Washer, 1/4" B.S.F.	–	–	–	

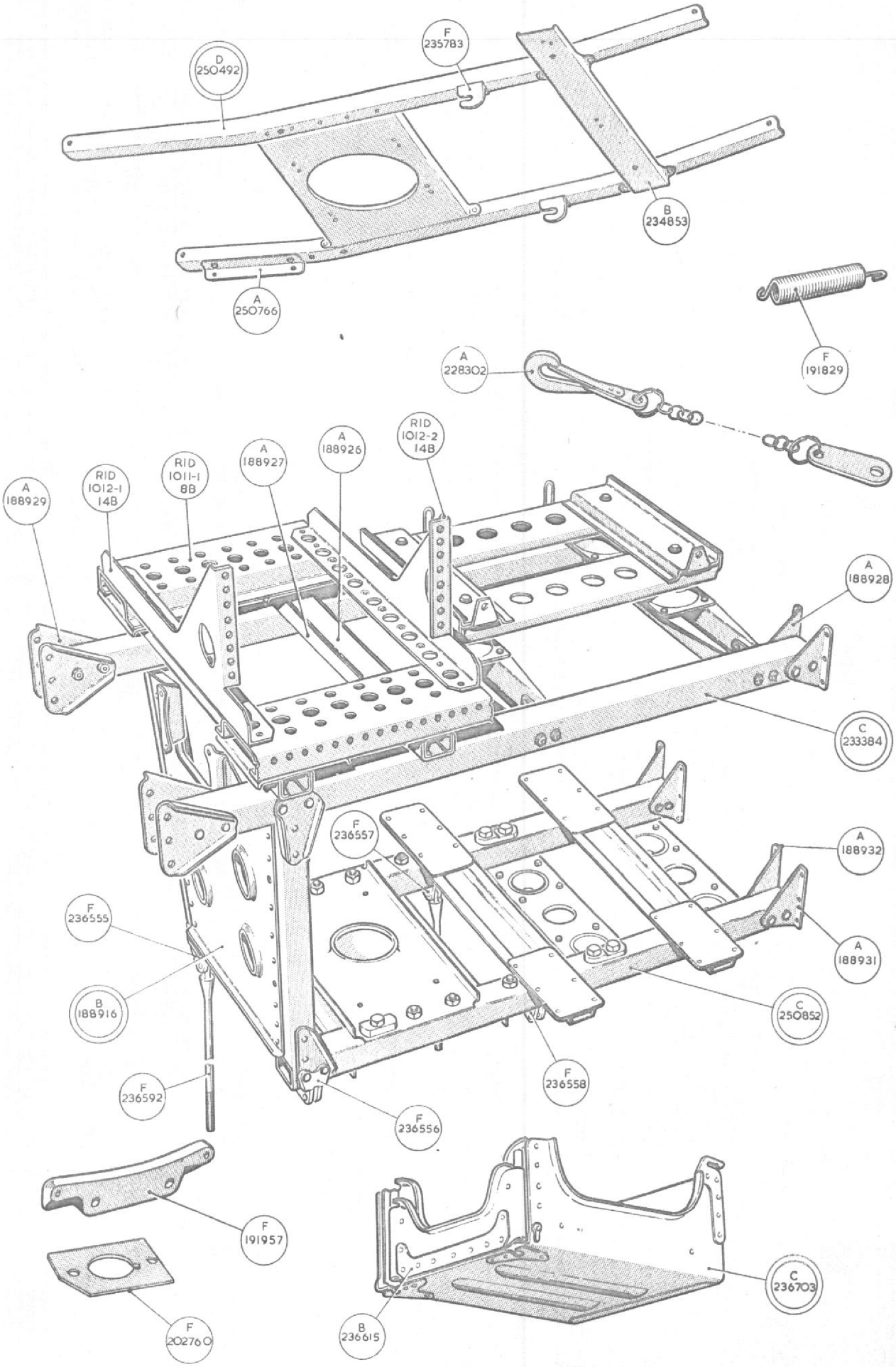
D 250492
F 235783
B 234853
A 250766
F 191829
A 228302
A 188929
RID 1012-1 14B
RID 1011-1 8B
A 188927
A 188926
RID 1012-2 14B
A 188928
C 233384
F 236557
A 188932
F 236555
A 188931
B 188916
C 250852
F 236558
F 236592
F 236556
F 191957
C 236703
F 202760
B 236615

This file was downloaded
from the RTFM Library.

Link: www.scottbouch.com/rtfm

Please see site for usage terms,
and more aircraft documents.