Chapter 7
PNEUMATIC SYSTEMS

LIST OF CONTENTS

Para.

Introduction 1

DESCRIPTION

Entrance door system
General 3
Entrance door - emergency exit
Controls 7
Operation - door opening 11
Operation - door closing 14
Canopy jettison
Controls 16
Operation 17
Pressure seals
Operation 19
De-icing system
General 23
Ground isolation cock 24
T.4 Bomb sight system (Pre-Mod.2377)
General 25
System installation 27
Controls 28
System components 29
T.4 Bomb sight system (Post Mod.2377)
General 29A
H2S scanner system
General 30
Controls 35
System components 36
N.B.C. system
General 37
Controls 40
System components 41
Ancillary systems
General 42
Bomb bay door seals system
General 45
System installation 47
Operation 50
Hydraulic reservoir and power pack pressurisation (Pre Mod. 2321)
General 52
System installation 53
System components 56

Para

SERVICING

Adjustment and testing 57
Test points 58
Charging
Entrance door system 59
T.4 Bomb sight 60
H2S scanner and N.B.C. system 61
Leakage tests
Entrance door system 62
H2S scanner system 64
N.B.C. system 65
Ancillary systems 66
Bomb door seals system 67
Complete system 68
Restrictor adjustment 72

REMOVAL AND ASSEMBLY

Releasing air pressure 73
Charging and test points 74

LIST OF TABLES

Table

Components in the pneumatic system for entrance door 1
Components in the pneumatic system for T.4 bomb sight (Pre Mod.2377) 2
Components in the H2S scanner and N.B.C. systems 3
Components in the ancillary systems . . . 4

LIST OF ILLUSTRATIONS

Fig.

Pneumatic system diagram - entrance door 1
Pneumatic system - entrance door 2
Door - operating mechanism 3
Pneumatic system - T.4 bomb sight . . . 4
Pneumatic system diagram - H2S scanner and N.B.C. 5
Pneumatic system installation - H2S scanner and N.B.C. 6
Pneumatic system diagram - ancillary supplies (pre Mod.2321) 7
Pneumatic system diagram - ancillary supplies (post Mod.2321) 7A
Pneumatic system installation - ancillary supplies (pre Mod.2321) 8
Pneumatic system installation - ancillary supplies (post Mod.2321) 8A

Introduction

1. This chapter contains a description of the pneumatic systems, gives details of servicing operations and recommends the method of removal and assembly of certain components. Reference should be made to Sect.3, Chap.11 of this Book for information on the door and canopy mechanisms.

2. The aircraft pneumatic services are divided into two groups; one being supplied with air from storage cylinders, the other with air tapped from the engines. The door opening and closing, T.4 bomb sight (pre Mod.2377), H2S and N.B.C. systems contain air storage cylinders. The remaining services, i.e., fuel tank pressurisation, bomb door seals, hydraulic system reservoir and power pack fluid cylinder (pre Mod.2321) and airborne equipment in the rear fuselage are supplied with air from the engines.

DESCRIPTION

ENTRANCE DOOR SYSTEM

General

3. The pneumatic system supplies compressed air to operate the main entrance door (also used, in flight, as an emergency exit), jettison the canopy, presurise the seals of the canopy and main door apertures and also to pressurise the windscreen de-icing system fluid tank. A list of main components used in the system is given in Table 1 opposite.

4. Two storage cylinders, each of 374 in^3 capacity, mounted below the crew's floor on the port side, are charged from an external supply to 2 000 lb/in^2. Each cylinder supplies a separate system; one, the emergency system, to open the door and jettison the canopy, and the other to close the door, pressurise the seals

TABLE 1

Components in the pneumatic system for entrance door and canopy

Component	Dunlop Part No.	Ref. No.	A.P.	Sect.	Chap.	Appendix
Cylinder, Mk.5F	-	6D/9429887	4303Z	-	-	-
Gauge, Mk.14KK 0-3 000 lb/in^2	-	6A/2691	1275A	-	-	-
Ram, canopy	AC.11324	27VA/5308	4303B	7	-	-
Jack, door, starboard	AC.11116	27VA/4496	4303B	7	28	1
Jack, door, port	AC.11118	27VA/4495	4303B	7	28	-
Valve, charging A58 Mk.2	-	28Y/15486	4303Z	4	6	2
Valve, sequence	ACO.1297	27VA/3392	4303B	6	11	-
Valve, sequence	ACO.3297	27VA/4824	4303B	6	11	1
Valve, sequence	ACO.4578	27VA/4493	4303B	6	11	3
Valve, pressure-reducing, 2 000 - 1 200 lb/in^2	ACM.17432	27VA/4817	4303B	4	20	2
Valve, pressure-reducing, 2000 - 400 lb/in^2	ACM.16390	27VA/4816	4303B	4	20	3
Valve, pressure-reducing, 400 - 25 lb/in^2	ACM.17452	27VA/4818	4303B	4	-	-
Valve, pressure-reducing, 400 - 14 lb/in^2	ACM.20218	-	-	-	-	-
Valve, by-pass	AC.62794	-	4303B	-	-	-
Univalve	AC.1071	27VA/4505	4303B	6	4	-
Valve, pressure-maintaining, 150 lb/in^2	ACO.1564	27VA/2949	4303B	4	2	-
Valve, pressure-relief, 2 250 lb/in^2	ACO.16886	27VA/4491	4303B	4	3	1
Restrictor	ACO.1223	27VA/2876	4303B	4	2	-
Ram, door emergency opening	AC.60130	-	4303B	7	36	-
Valve, Unimatic	AC.60326	-	4303B	-	-	-
Valve, control canopy	AC.61744	27VA/	4303B	6	12	-

and operate the de-icing system. Mod.2377 provides an additional storage cylinder utilized from the inoperative T.4 bomb sight system to give increased air storage for the entrance door (close) system.

5. Charging valve, A58, and a pressure gauge to each cylinder, are mounted on the front bulkhead in the nosewheel bay. Pressure-relief valves, set at 2 250 lb/in^2 are embodied in each line between the charging valve and the cylinders.

6. A schematic diagram of the system is given in fig.1. Part numbers of components are Dunlop if not otherwise stated.

ENTRANCE DOOR - EMERGENCY EXIT

Controls

7. The system is used to open the main entrance door when it is being used, in flight, as an emergency exit and also to close the door when the aircraft is on the ground.

8. A lever in a gated quadrant mounted at the forward end of the door port frame member is provided to open the door manually, For emergency operation two switches are provided, one on the navigator's panel adjacent to the ABANDON AIRCRAFT switch and one, a three-position centre-OFF switch, mounted on the front face of the rear crew's table. A detailed description is contained in Sect.3, Chap.11 of this Publication.

9. Two controls are available to close the door. One, consisting of a handle and cable attachment, normally covered by a hinged access panel in the crew's floor immediately below the centre seat, is provided for use by the personnel inside the aircraft and is pulled to operate. The other control, a press-button adjacent to the external door handle, is used by personnel outside the aircraft.

10. Warning indicators, mounted on the operating lever quadrant housing, consist of a red lamp marked DOOR NOT SAFE and a green lamp marked DOOR SAFE. A white/black magnetic indicator on the pilots' centre panel, shows BLACK when the door is secure and locked closed, and a lamp in the nosewheel bay shows GREEN when the door is closed.

Operation - door opening

11. When the gated lever is selected, the following sequence of operations occurs:-

(1) The first 25 deg of lever movement moves a cam on the door operating lay-shaft away from the plunger on a sequence valve and the door seal exhausts to atmosphere.

(2) The next 42½ deg of movement withdraws the door pins and the door opens under gravity when the aircraft is on the ground.

(3) In flight, the final 27½ deg movement of the lever to EMERGENCY position, depresses the plunger of the door-operating sequence valve and admits air from the forward storage cylinder through a pressure-reducing valve set to 1 200 lb/in^2 and through a by-pass valve or a restrictor to the down side of the jacks. Air from the up side of the jacks is exhausted through a sequence valve to atmosphere. The route of the pneumatic pressure is determined by the position of the nosewheel unit.

11A. Selection of either of the emergency switches causes a unimatic valve in the door OPEN system to open and pass air to the torque shaft operating jack, thus automatically opening the door.

12. In flight, sufficient pressure is required to open the door against the force of the airstream acting upon it. The by-pass valve is coupled mechanically to the nosewheel strut, the linkage being so arranged that when the strut is retracted, the valve is open, the restrictor is by-passed and the full operating pressure is applied to the jacks.

13. With the aircraft on the ground and the nosewheel unit lowered, the by-pass valve is closed by the linkage and air passes through the restrictor. Although this reduces the speed of the door opening, damage to the door assembly and hinges may occur. Therefore, emergency opening tests are to be carried out in accordance with the instructions detailed in Sect.3, Chap.1, para.51.

Operation - door closing

14. When the door-closing handle, inside the aircraft, is pulled, a lever operates the door closing sequence valve plunger and air passes from one of the storage cylinders through a press-reducing valve set at 400 lb/in^2 and a ground isolation cock (para.24) to the up side of the door jacks. Displaced air from the down side of the jacks is exhausted to atmosphere through the door-opening sequence valve. When the door is closed and locked, it trips the plunger of the seal-operating sequence valve and air is admitted to the door seals. Note that this mechanism is normally protected by a screwed cover guard which is readily detachable for servicing purposes.

15. Pressing of the external button operates the plunger of the door-closing sequence valve

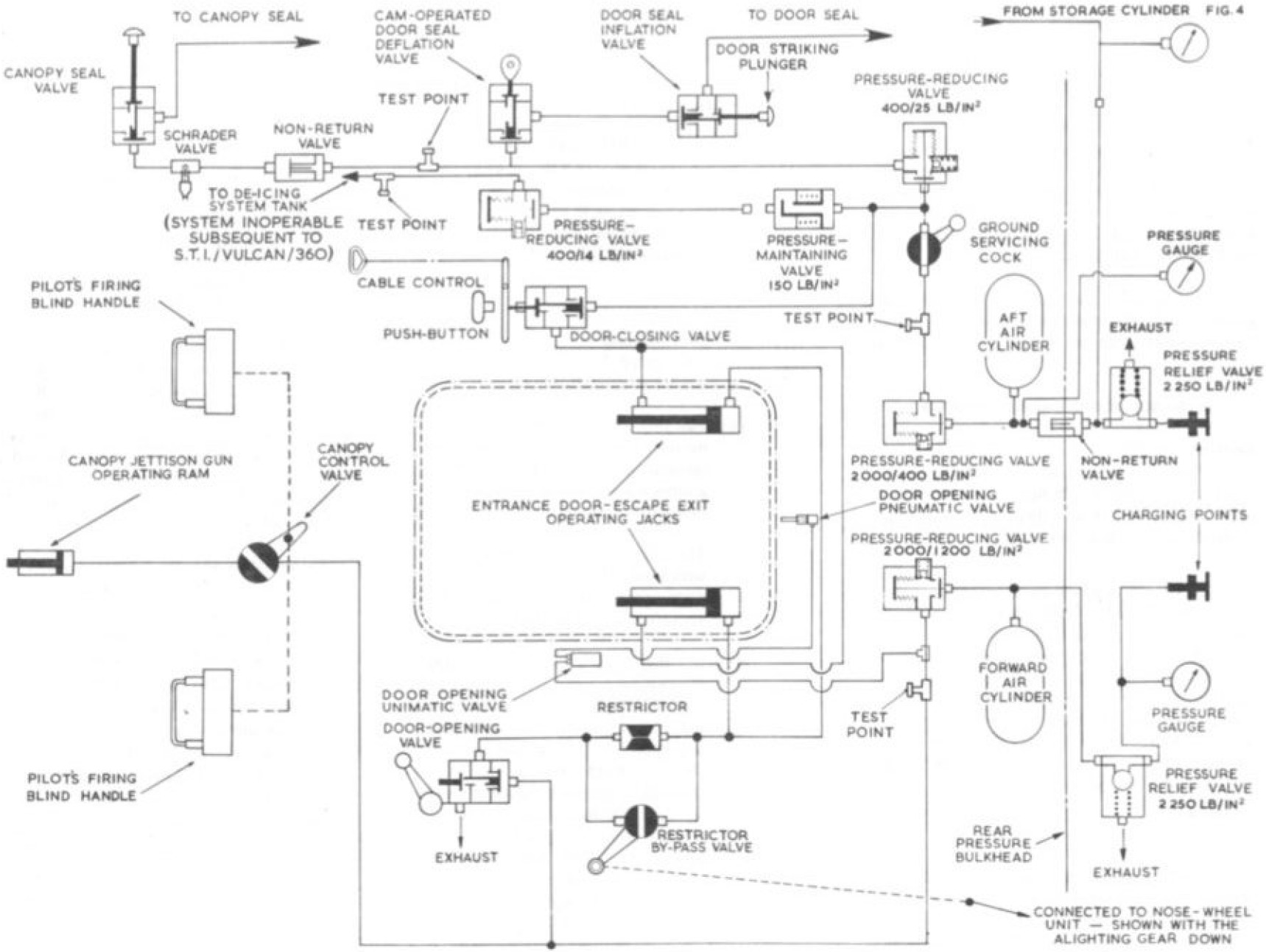

Fig. 1 Pneumatic system diagram-entrance door

« S.T.I./Vulcan/360 »

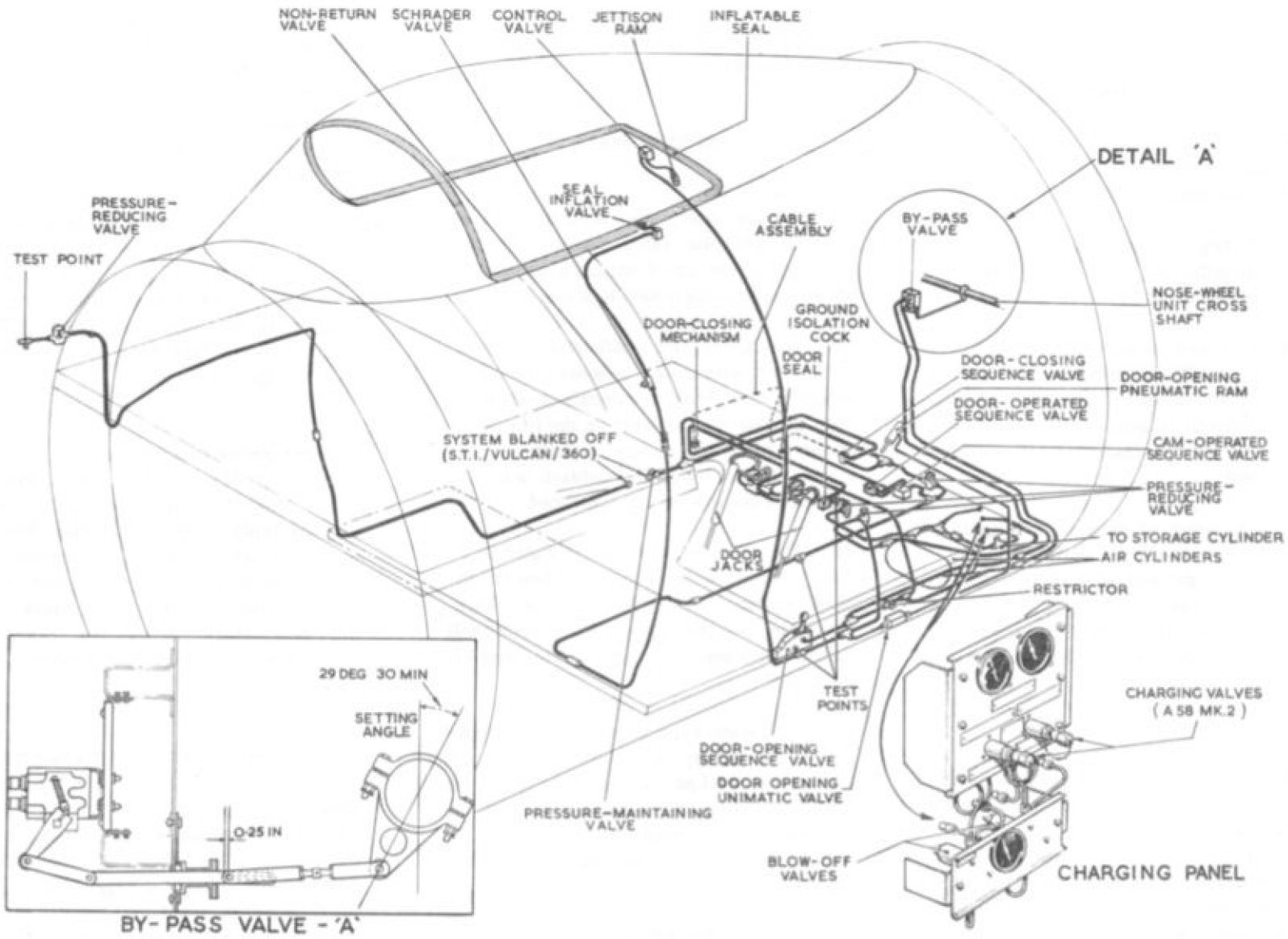

Fig. 2 Pneumatic system – entrance door

« S.T.I. / Vulcan / 360 »

and admits air to the door jacks in a similar manner to that described in the previous paragraph.

CANOPY JETTISON

Controls

16. The canopy can be jettisoned by any one of the three following methods:-

(1) Pulling of the firing-blind handle on either the first or second pilot's ejection seat.

(2) Operation of a gated lever, labelled CANOPY RELEASE–PULL and identified with black and yellow diagonal stripes, on either side of the cockpit adjacent to each pilot's seat.

(3) Operation of external red-painted release handle on the port side of the front fuselage. Full descriptive and servicing details of the mechanical action of the controls are given in Sect.3, Chap.11 of this Book.

Operation

17. Operation of either ejection seat firing-blind handle opens the canopy control valve to admit air from the 'door-open' cylinder, through a pressure-reducing valve set at 1 200 lb/in^2 to a pneumatic ram. The jack, which is attached to a push-pull rod and lever assembly, when operated releases the canopy attachments and operates a jettison gun to blow off the canopy.

18. The operation detailed in the previous paragraph is achieved by mechanical means when either canopy release handle in the cockpit or the external handle is selected. A full description of this method is contained in Sect.3, Chap.11 of this Book.

PRESSURE SEALS

Operation

19. Pressure seals, one round the canopy aperture and the other round the door aperture, prevent loss of internal pressure when the air-conditioning system is in use.

20. The canopy seal is inflated to 25 lb/in^2 from the 'door-close' cylinder through a sequence valve which is normally held in the open position by a bracket on the rear of the canopy. When the canopy is jettisoned, the bracket is no longer in contact with the sequence valve and the seal is deflated.

21. The entrance door seal is inflated to 25 lb/in^2 through a sequence valve held in the open position when the door is closed. Operation of the door-opening lever will deflate the seal as described in para.11, sub-para.1.

22. A Schrader-type air valve in the supply line to the canopy seal, located on the port side of the cockpit, provides the means to inflate the seal by additional use of a hand-pump for weatherproofing purposes should the air cylinder be empty or removed.

DE-ICING SYSTEM

General

23. The de-icing system fluid tank is pressurised from the 'door-close' cylinder. When de-icing is selected, air passes through a ground isolation cock, a pressure-maintaining valve set to 150 lb/in^2 and through a pressure-reducing valve set between 14 and 15 lb/in^2, to the tank. The maintaining valve reserves air pressure at 150 lb/in^2 for the door and canopy seals, in case of excessive consumption or leaks in the de-icing system lines or tank.

◀23A. Subsequent to S.T.I./Vulcan/360 the de-icing system is rendered inoperable by blanking off the pressurisation system downstream of the pressure-maintaining valve, draining the fluid supply tank (Sect.3, Chap.9) and locking the tank drain cock in the open position. ▶

Ground isolation cock

24. A control cock is fitted to the underside of the crew's floor and is normally locked in the ON position by a red cover. When the cover is removed, the cock is turned off to isolate the door-closing valve, pressure seals and de-icing system. This operation is necessary when fitting the canopy or replenishing the de-icing fluid reservoir.

T.4 BOMB SIGHT SYSTEM (Pre-Mod.2377)

General

25. Air is supplied to the T.4 bomb sight computer from a storage system below the pilots' floor. A single storage cylinder of 374 in^3 capacity, mounted on the starboard side, is charged from an external supply to 2 000 lb/in^2.

26. A charging valve and a pressure gauge are included on the main pneumatic charging panel

mounted on the front bulkhead of the nose-wheel bay. A 2 250 lb/in^2 pressure-relief valve and a non-return valve are embodied in the pipe line between the charging valve and the storage cylinder.

System installation

27. From the cylinder, air is piped through a shut-off valve to a 60 lb/in^2 pressure-reducing valve, and then through a 67 to 70 lb/in^2 pressure-relief valve to the air inlet of the T.4 bomb sight computor.

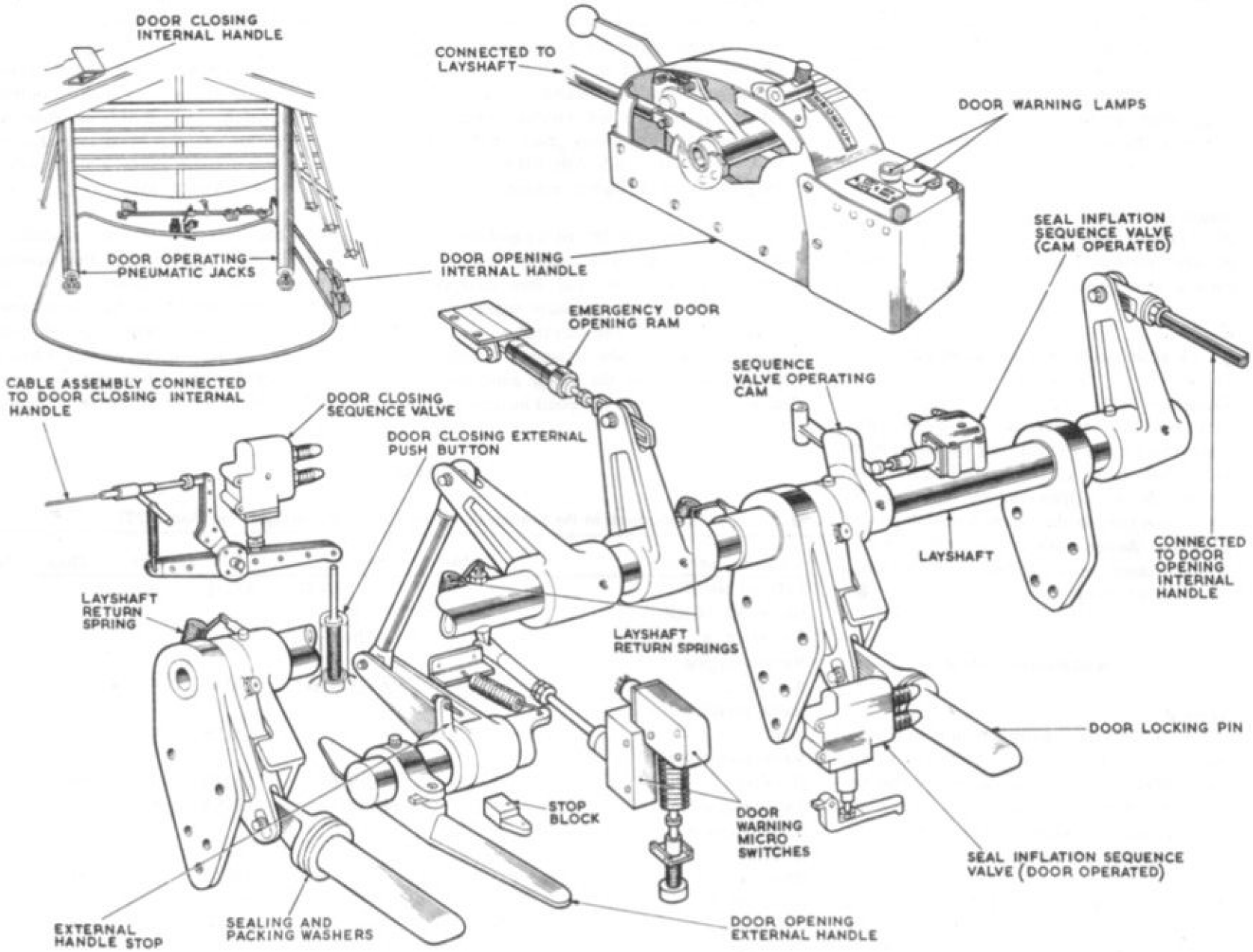

Fig. 3 Door-operating mechanism

Controls

28. The shut-off valve is mounted on the port side aft face of the pilot's floor, and adjacent to it, connected to a three-way union in the outlet pipe of the air drier, is a pressure gauge which provides a reading of pressure delivery at the bomb sight computor.

System components

29. Table 2 gives a list of components used in the system together with their Air Publication references.

T4. BOMB SIGHT SYSTEM (Post Mod.2377)

General

29A. Mod.2377 renders the T.4 bomb sight system inoperable by removing the outlet pipe from the storage cylinder, blanking off the outlet side of cylinder and by replacing the non-return valve in the charge line with a pipe coupling adapter. This arrangement provides the entrance door (close) system with increased air storage capacity.

H2S SCANNER SYSTEM

General

30. The H2S pneumatic system is similar to the N.B.C. system which is described in later paragraphs. The systems are shown together on illustrations fig.5 and 6 and lists of components used are given in Table 3 together with their Air Publication references.

31. Air is supplied to the H2S scanner from a storage system in the nose of the aircraft. A single storage cylinder, of 750 litres capacity, is mounted in the port side of the nose and is charged through an A58 Mk.2 valve and filter from external sources to 1 800 lb/in^2. A pressure-relief valve, set to operate at 2 000 lb/in^2 is embodied in the line between the charge valve and the cylinder. The charging valve, test points and pressure gauges are revealed when the access panel, marked H2S SCANNER AND NBS AIR CHARGING, on the port side of the nose is removed.

32. From the cylinder, air is piped through a pressure-reducing valve, which lowers the pressure to 30 lb/in^2 and then through an electromatic tap to a pressure regulator. The pipe between the cylinder and the pressure-reducing valve is tapped to supply a pressure reading on the charge panel pressure gauge. An A58 valve test point incorporated in the pipe after the pressure-reducing valve, is mounted on the charge panel.

33. There are two outlets from the regulator; one supplies a regulated output at approximately 16.2 lb/in^2 absolute to the scanner, this line also being tapped to supply the crew's pressure gauge, and the other is a relief to the pressure cabin.

34. The function of the regulator is to control the pressure in the scanner at approximately 1.5 lb/in^2 above normal atmospheric pressure i.e., 16.2 lb/in^2 absolute, approximately, irrespective of ambient pressure. To prevent this pressure rising above the required value a relief valve is incorporated and is set to relieve at one lb/in^2 above the

TABLE 2

Components in the pneumatic system for T.4 bomb sight (Pre-Mod 2377)

Component	Pt. No.	Ref.No.	A.P.	Sect.	Chap.	Appendix
Cylinder Mk.5F	-	6D/9429887	4303Z	-	-	-
Gauge, Mk.14 KK 0-3 000 lb/in^2	-	6A/2691	1275A	-	-	-
Valve, charging A58 Mk.2	-	28Y/15486	4303Z	4	6	1
Valve, pressure relief	ACO.16886		4303B	4	3	1
Valve, non-return (Dowty)	D.5220Y	27Q/926	1803D	9	58	1
Valve, shut-off	-	6D/223	1275A	8	9	-
Valve, pressure-reducing, (Hymatic)	P5/82/4	-	4303C	4	30	1
Valve, relief (Hymatic)	RV/31/5	27VB/5300	4303C	4	30	1
Air drier	-	9/4592	-	-	-	-
Gauge, Mk.14B	-	6A/2685	1275A	-	-	-

NOTE . . .
SYSTEM MADE INOPERABLE BY BLANKING OFF AIR CYLINDER OUTLET TO BOMB SIGHT COMPUTOR AND REMOVAL OF NON-RETURN VALVE FROM CHARGE LINE. THIS ARRANGEMENT GIVES INCREASED AIR STORAGE CAPACITY FOR ENTRANCE DOOR (CLOSE) SYSTEM.

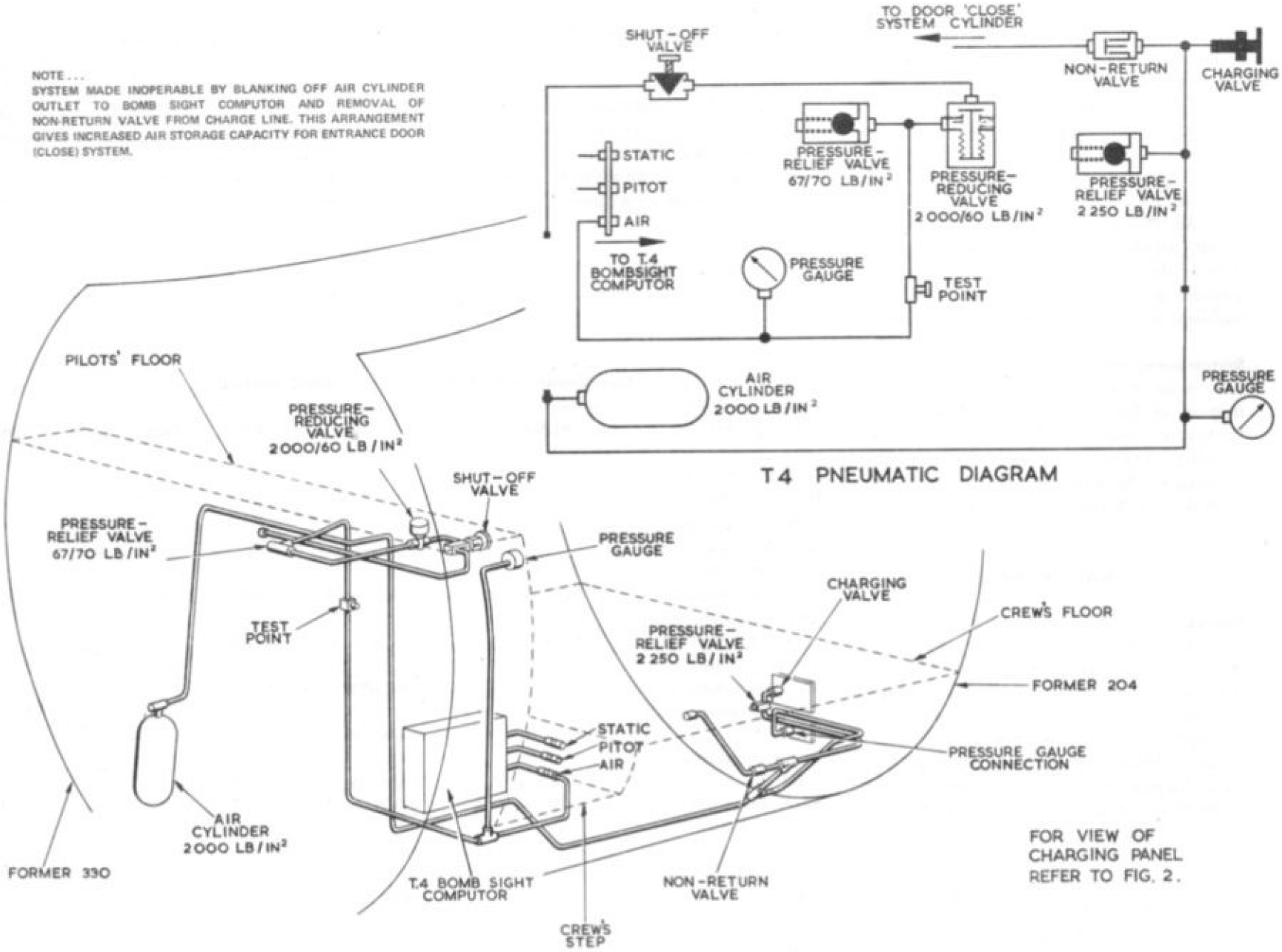

Fig. 4 Pneumatic system – T.4 bombsight

◄Mod. 2377►

regulated pressure, i.e., approximately 17.2 lb/in^2. A reverse pressure relief valve, also incorporated in the regulator, prevents excessive differential pressure across the pressurised units should there be a failure in the pressurising air supply.

Controls

35. An ON/OFF switch to open or close the system supply line, and a pressure gauge showing the absolute pressure supplied to the scanner, are mounted on a bracket at the starboard side of the crew's instrument panel.

System components

36. A list of components used in the system is given in Table 3 together with their Air Publication references. Full descriptive and servicing details are given in these Air Publications to which reference should be made if more detailed information is required.

N.B.C. SYSTEM

General

37. As in the H2S system, air is supplied to the N.B.C. equipment from a storage system in the nose of the aircraft. A single storage cylinder, of 750 litres capacity, is mounted in the port side of the nose forward of the H2S system cylinder, and is charged through the same charging point to the same pressure, i.e., 1 800 lb/in^2. A test point and pressure gauge are also provided on the charge panel.

38. From the cylinder, air is piped through a pressure-reducing valve, which lowers the pressure to 30 lb/in^2 and then through an electromatic tap to a pressure regulator, the output of which is governed at 2.5 lb/in^2.

39. The outlet from the regulator is connected to a manifold of six feed pipes; five of these connect to the separate components of the N.B.C., the other supplies a pressure reading on a differential pressure gauge mounted on the crew's panel.

Controls

40. An ON/OFF switch, to open or close the electromatic tap in the system supply line, is mounted in the top starboard section of the crew's panel. A differential pressure gauge mounted adjacent to the switch, indicates the difference between atmospheric pressure and that supplied to the components in the nose-wheel bay.

TABLE 3

Components in the H2S scanner and N.B.C. systems

Component	Pt.No.	Ref. No.	A.P.	Sect.	Chap.	Appendix
Cylinders Mk.5D H2S and N.B.C.	-	6D/9429885	-	-	-	-
Valve, test charging A58 Mk.2 (common)	-	28Y/15486	4303B	4	6	2
Valve, pressure-reducing (common)	ACM.15318	27VA/5214	4303B	4	3	1
Valve, pressure-reducing (common)	ACM.17500	27VA/5216	4303B	4	7	13
Gauge, pressure, Mk.14H (common)	-	6A/2688	1275A	15	6	-
Gauge, pressure, H2S	KPD.0103C	6A/4816	1275A	15	17	-
Gauge, pressure, N.B.C.	KPA.0102/C	6A/4654	1275A	15	21	-
Filter (common)	ACM.18302	27VA/5212	4303B	2	7	1
Pressure regulator H2S	-	6W/20	-	-	-	-
Pressure regulator N.B.C.	-	6W/41	-	-	-	-
Electromatic tap (common)	AC.11312	27VA/5215	4303B	5	7	-

System components

41. A list of components used in the system is given in Table 3 together with their Air Publication reference. Full descriptive and servicing details are given in these Air Publications to which reference should be made if more detailed information is required.

ANCILLARY SYSTEMS

General

42. Air is delivered from the engines at pressures up to 200 lb/in^2 through single pipe lines each containing a non-return valve. The function of the non-return valve is to prevent air pressure being lost from the remaining engines, by passing through an immobilised engine instead of the systems.

◀43. The air pipes from No.1, 2 and 3 engines join a common feed line containing a four-way union (pre Mod.2321) or a three-way union (post Mod.2321) to supply the bomb door seals, airborne equipment in the rear fuselage and, on pre Mod.2321 aircraft, the hydraulic reservoir and emergency power pack fluid cylinder. Each engine maintains an air supply to its associated fuel tank group.

44. Fuel tank pressurisation systems are described in Sect.4, Chap.6 and the airborne equipment in Sect.3, Chap.16. The bomb bay door seals and the hydraulic system reservoir and emergency power pack systems (pre Mod.2321) are described under their respective headings in the following paragraphs together with appropriate system diagram and installation illustrations. ▶

BOMB BAY DOOR SEALS SYSTEM

General

45. Inflatable seals are fitted at the forward and rear ends of the bomb bay to assist in preventing heat losses since they cater for variations in the gaps between the doors and the surrounding structure caused by deflection of the structure in flight. Note also that the non-inflatable seals are fitted at the remaining joints and at all hinge points.

46. Maintenance of equable conditions in the bomb bay is important in that certain types of stores and equipment are adversely affected by a low temperature. It is therefore important that the system is serviced to a state of high efficiency otherwise the purpose of an aircraft's mission would be wasted.

System installation

◀47. From the four-way union (pre Mod.2321) or three-way union (post Mod.2321) in the main supply line ▶ (para.43), air for the inflatable seals passes through a 200 to 10 lb/in^2 reducing valve located to the port and rear of the hydraulic reservoir, and thence through a fore-and-aft pipeline along the bomb bay to the front and rear spars.

48. At the front spar, the pressure line passes through a unimatic valve and two rapid exhaust valves to the seal on the forward side of the rear spar. Also interposed in this line after the rapid exhaust valves is a connection point for pressure gauge.

49. Initial control of the inflation and deflation of the seals is by the action of the doors on the 'bomb doors closed' microswitches situated to port and starboard at the forward end of the doors.

Operation

50. Closing of the doors operates the microswitch to complete the electrical circuit to the unimatic valves, the solenoids of which are energised, and the valves open to allow air pressure to the rapid exhaust valves. Air pressure moves the piston of the latter valves to seal off the exhaust and air is thus allowed to pass into and inflate the seals.

51. When the bomb doors are selected open, the electrical circuit to the unimatic valves is broken. Their solenoids are de-energised causing the inlet side of the valve to close and the exhaust to open, thus cutting off the air supply to the rapid exhaust valves and the seals. Loss of air pressure to the inlet side of the rapid exhaust valves causes their exhaust ports to open, by reverse action of the pistons, allowing air from the seals to atmosphere through these valves.

◀ HYDRAULIC RESERVOIR AND POWER PACK PRESSURISATION (PRE MOD.2321)

General

52. On aircraft pre Mod.2321 the hydraulic reservoir and emergency power pack fluid cylinder are pressurised with air to ensure that a positive head of pressure is maintained on their outlet connections to prevent cavitation. ▶

TABLE 4

Components in the ancillary systems

Components	Pt. No.	Ref. No.	A.P.	Sect.	Chap.	Appendix
Valve, non-return (Dowty)	D7313Y	27Q/1378	1803D	9	79	-
◀ Valve, non-return (Dowty)	D446Y	27QM/607	1803D	9	32	1,2 ▶
Valve, charging A.58 Mk.2		28Y/15486		-	-	-
Valve, pressure-relief	ACM.15318	27VA/5214	4303B	4	3	2
Valve, pressure-reducing, 200 - 10 lb/in^2	ACM.17456	-	4303B	4	20	5
Valve, unimatic	AC.11306	27VA/4822	4303B	5	4	1
Valve, rapid exhaust	ACM.17898	27VA/4821	4303B	4	13	1
◀ Restrictor	196Q/1866	26DC/1433643	-	-	-	- ▶
Valve, non-return	702/AA06/A	-	-	-	-	-
Valve, non-return	704/AA02/B	-	-	-	-	-
◀ Valve, non-return (Dowty)	D5224Y	27QM/1376	-	-	-	-
Valve, pressure-reducing, 200-15 lb/in^2	ACM.27450	27VA/1503008	-	-	-	- ▶

System installation

53. From the four-way union in the main supply line (para.47) air passes through a 200-15 lb/in^2 pressure-reducing valve and a non-return valve before branching to the reservoir and emergency power pack.

54. One branch is vented from atmosphere through a non-return valve, the second branch passes to the power pack and the third branch passes via a restrictor valve and a non-return valve to the reservoir.

55. A vent valve, set to blow-off at 22-27 lb/in^2 and reseat at a minimum of 16 lb/in^2, is mounted on top of the reservoir.

System components

56. Table 4 gives a list of components used in the systems together with their Air Publication references.

SERVICING

ADJUSTMENT AND TESTING

57. Components of the pneumatic systems are to be adjusted and tested in accordance with the general instructions contained in the A.P.4303, series. Refer to the lists of components given in Tables 1 to 4 covering the various systems for the relevant volume and chapter.

TEST POINTS

58. Test points (these are A58 valves) are provided down-stream of each pressure-reducing valve in the pneumatic supply line to the entrance door, canopy seals, de-icing system reservoir (pre-S.T.I./Vulcan/360) and the T.4 bomb sight computer (pre Mod.2377). The output from the pressure-reducing valves can be checked at these points using a gauge and an inflation adapter Ref.No. 4G/6246. These gauges are as follows:-

0 to 10 lb/in^2 - Ref.No.4G/
0 to 25 lb/in^2 - Ref.No.4G/
0 to 600 lb/in^2 - Ref.No.4G/4420032
0 to 1 500 lb/in^2 - Ref.No.4G/4420033

CHARGING

Entrance door systems

59. The two storage cylinders are charged through standard A58 valves, one to each cylinder; the charging panel is mounted on the aft face of the pressure bulkhead at the forward end of the nose-wheel compartment. Gauges on the charging panel indicate the storage cylinder pressure. Brief details of the system charging is contained in Sect.2, Chap.2. The method of charging the high-pressure systems is given in A.P.1464G, Vol.1, Part 2, Sect.5, Chap.17 to which reference should be made if further details are required.

T.4 bomb sight

60. The storage cylinder for the T.4 bomb sight pneumatic system is charged through the same A58 valve used to charge the main entrance door (close) system, and system pressure is indicated on the pressure gauge

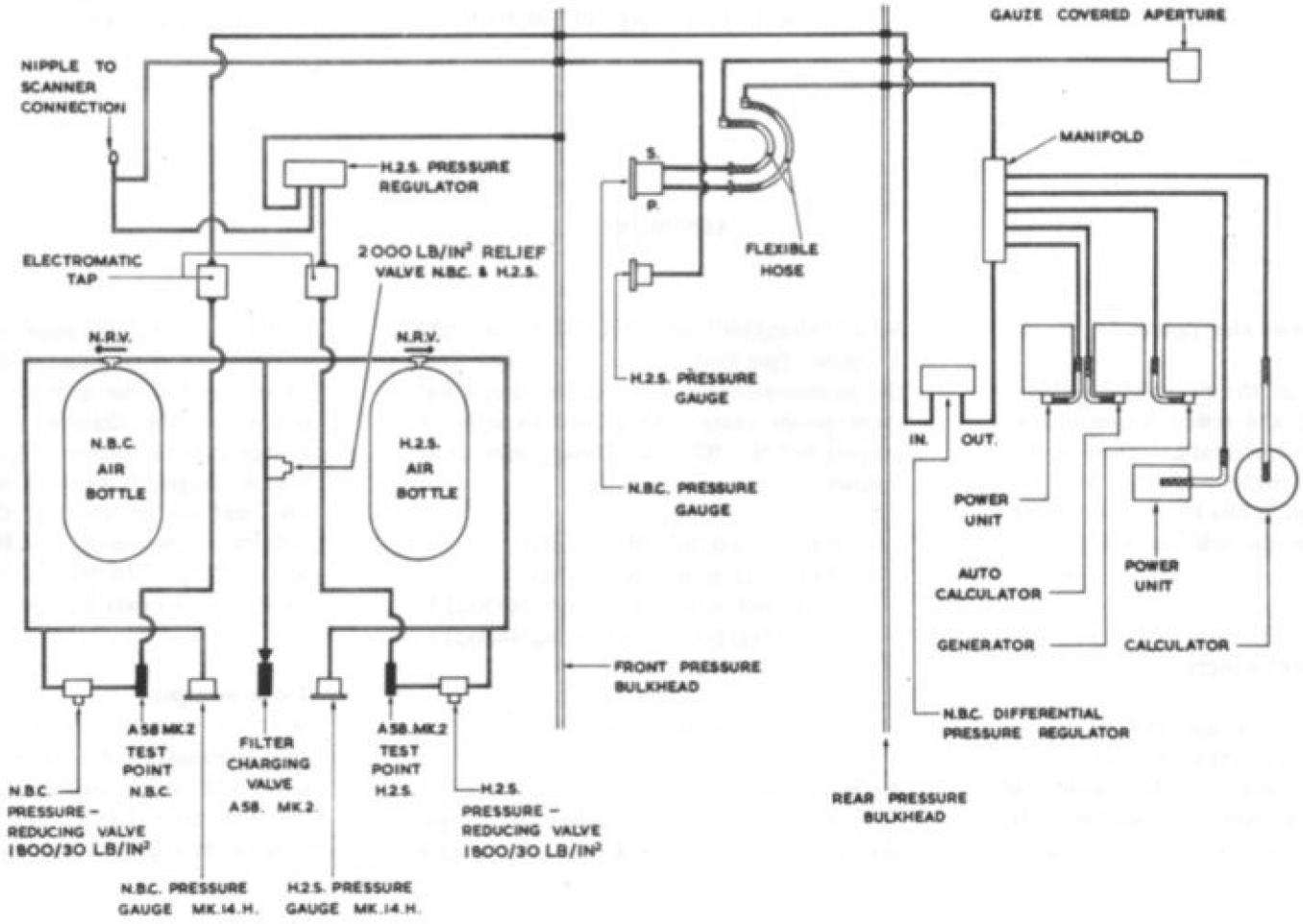

Fig. 5 Pneumatic system diagram—H.2.S. scanner and N.B.C.

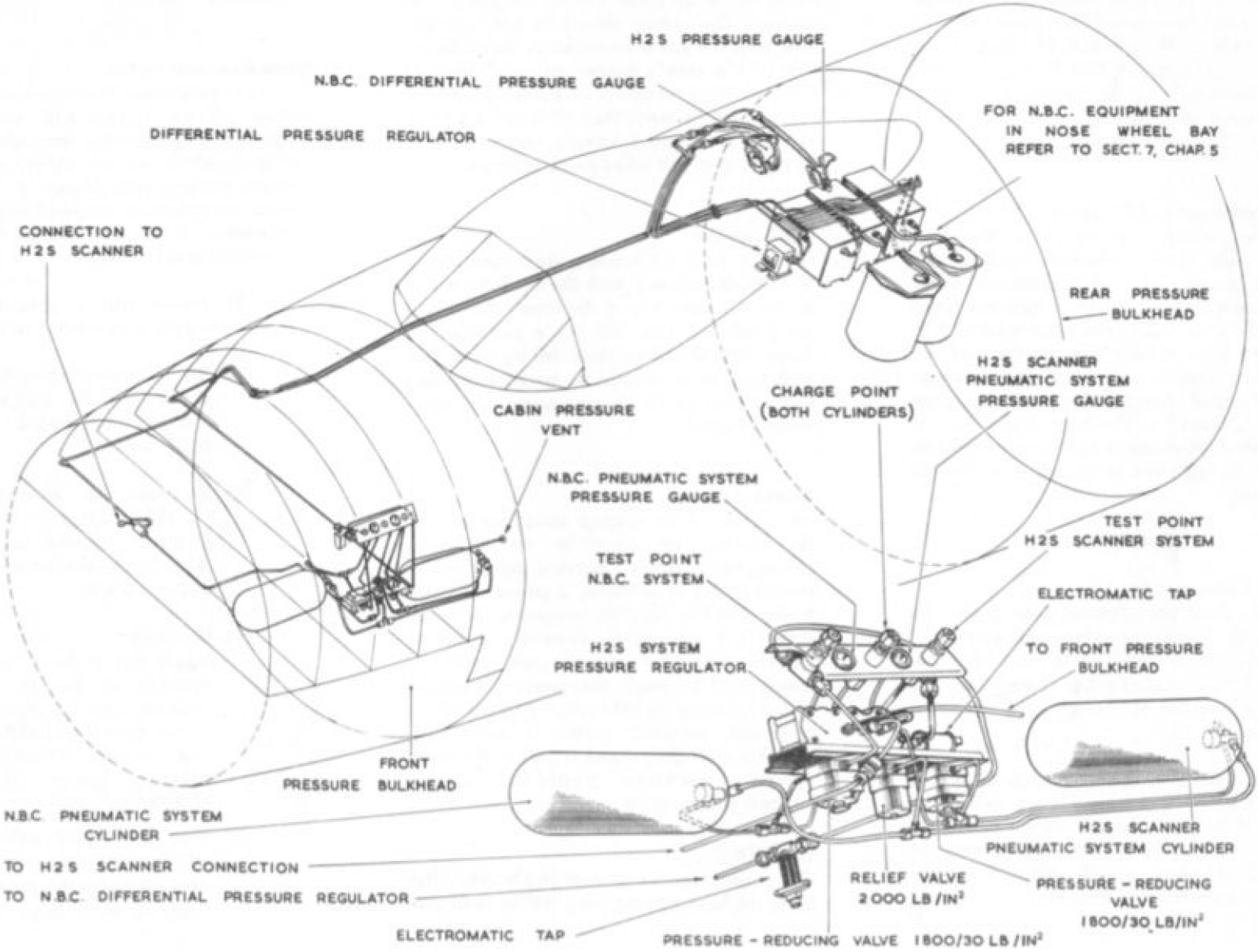

Fig. 6 Pneumatic system – H.2.S. scanner and N.B.C.

mounted on the lower portion of the main pneumatic charging panel. Mod.2377 renders the system inoperable but connects the storage cylinder into the entrance door (close) system. Brief details of the method of charging the system are contained in Sect.2, Chap.2 of this book. Full details of the method of charging high-pressure systems is given in A.P.1464 as quoted in the previous paragraph.

H2S scanner and N.B.C. system

61. The storage cylinders for the H2S scanner and N.B.C. pneumatic systems are charged together through a common charge point, consisting of an A58 valve and filter, accessible when the access panel marked H2S AND N.B.C. AIR CHARGE, on the port side of the nose section is removed. Brief details of the method of charging the systems are given in Sect.2, Chap.2 of this book. Full details of the method of charging high-pressure systems is given in A.P.1464 as quoted in a previous paragraph.

LEAKAGE TESTS

Entrance door system

62. To check the entrance door system for leakage, the system air cylinder pressures must first be reduced to 500 lb/in^2 and the door opened by selection of either of the emergency switches provided at the rear crew members' positions.

63. With the door open, replenish the system to 2 000 lb/in^2 and leave for a period of 12 hours. Should the pressure fall by more than 35 lb/in^2 the cause of the leakage must be investigated, using a soap solution at pipe joints, and when found rectified.

H2S scanner system

64. To check for leakage it is necessary to blank off at the outlet end of the pipe to the scanner. The system should be fully charged and, with the line valve switch at the starboard side of the crew's instrument panel selected ON, left for a period of 12 hours. Should the pressure fall by more than 50 lb/in^2 the cause must be investigated, using a soap solution at all pipe joints, and when found rectified.

N.B.C. system

65. To check for leakage, the system should be fully charged and, with the line valve switch at the starboard side of the crew's instrument panel selected ON, left for a period of 12 hours. Should this pressure fall by more than 50 lb/in^2 the cause must be investigated, using a soap solution at all pipe joints, and when found rectified.

Ancillary systems

66. Tests of the systems served by air from the engines are given in the following paragraphs. A ground electrical supply will be required, and if available, a ground servicing trolley Ref.No. 4F/1796 to operate the bomb doors. It is permissible, however, to use the aircraft hydraulic power pack unit, by selection of the bomb door emergency control switch, situated on the cockpit port console, if a ground servicing trolley is not readily available, providing regard is paid to the power operating limitations printed on a label adjacent to the switch.

WARNING . . .

The utmost cleanliness must be observed when using the hydraulic servicing trolley until such times as they are fitted with Micro filters. The end caps to the hoses must always be fitted immediately after use.

Bomb door seals system

67. It is anticipated that the bomb door seal portion of the system will require more frequent testing than the remainder owing to the seals, which are of rubber, being in an exposed position and subject to variation in climatic conditions as compared with the metal components in the remainder of the system. The method is as follows:-

(1) Ensure that a ground electrical supply is connected to the aircraft.

(2) Select bomb doors open and check visually that the seals are deflated and are undamaged; close the bomb doors.

(3) Connect an adapter Ref.No. 4G/4131, fitted with a 0 to 20 lb/in^2 pressure gauge, to the A58 valve located on the front face of the rear spar.

(4) Disconnect the bomb door seal supply pipe at the three-way union upstream of the 200 - 10 lb/in^2 reducing valve and apply a pressure of not more than 200 lb/in^2 to the seal system. Check that the pressure gauge (3) indicates 10 lb/in^2.

(5) Stop the supply and check, by reference to the gauge, that the time taken for the pressure to fall from 10 to 9 lb/in^2 is not less

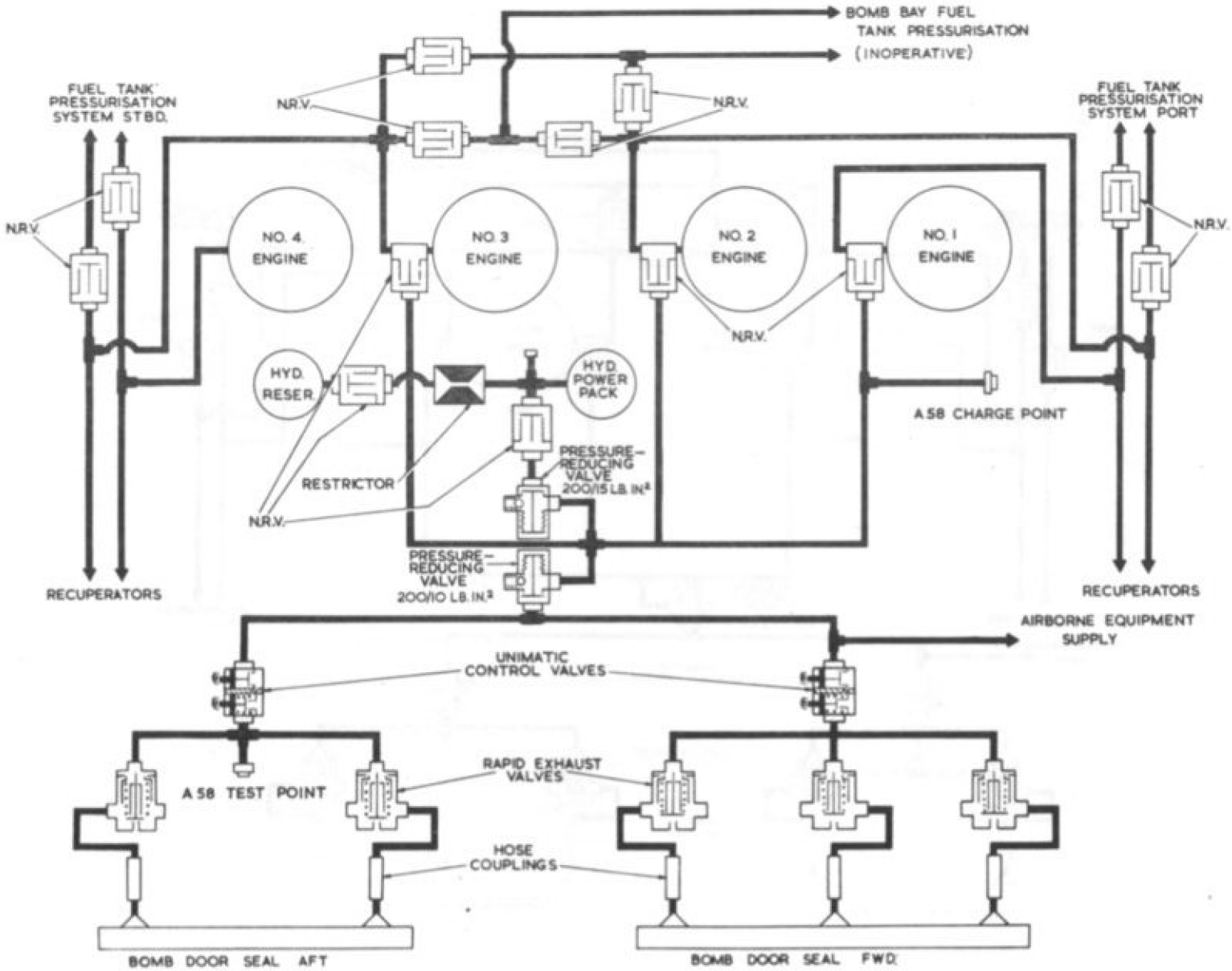

13454

Fig. 7 Pneumatic system diagram - ancillary supplies (pre Mod. 2321)

◄ New illustration ►

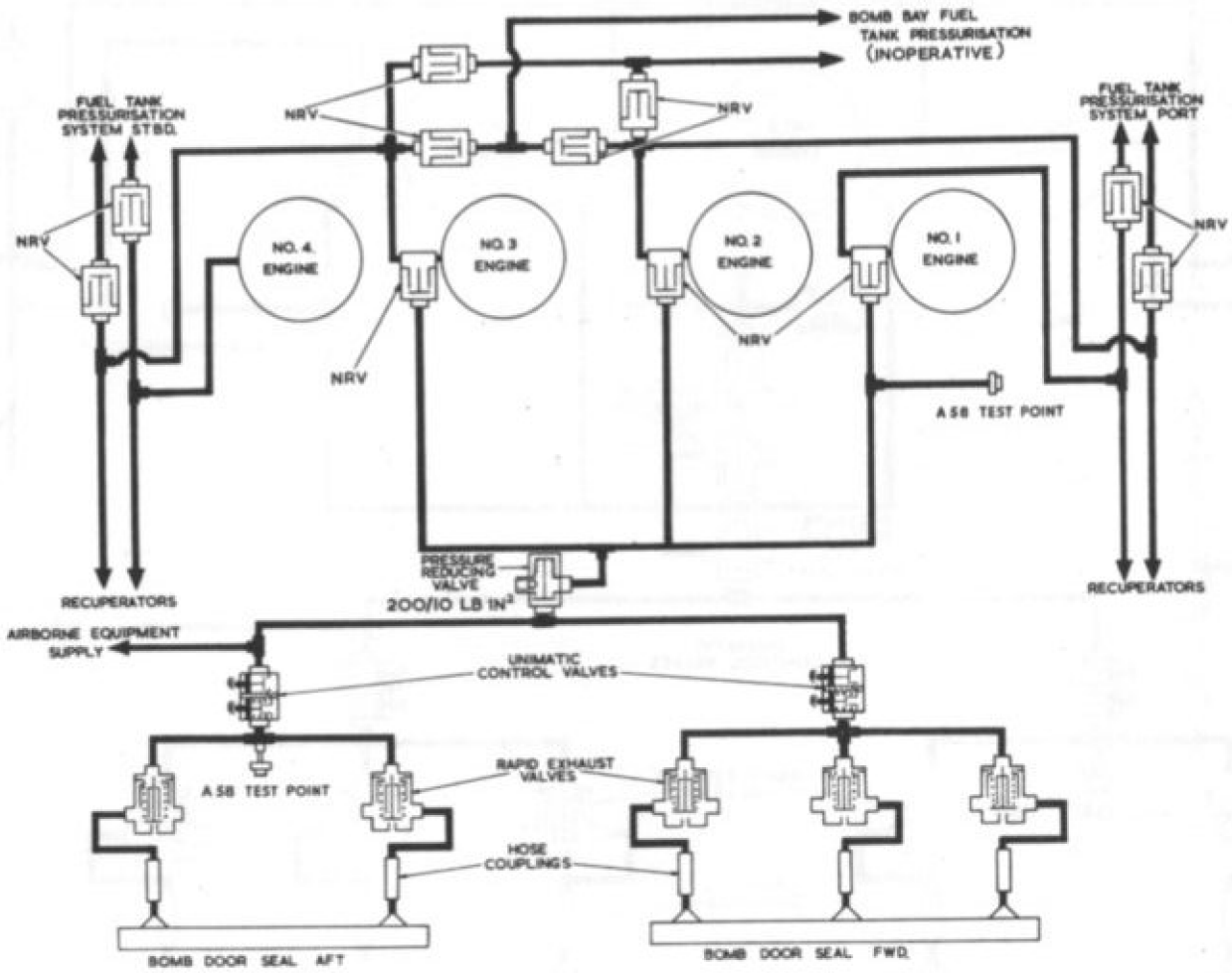

A1532

Fig. 7A Pneumatic system diagram - ancillary supplies (post Mod. 2321)

◄ *Illustration re-titled* ►

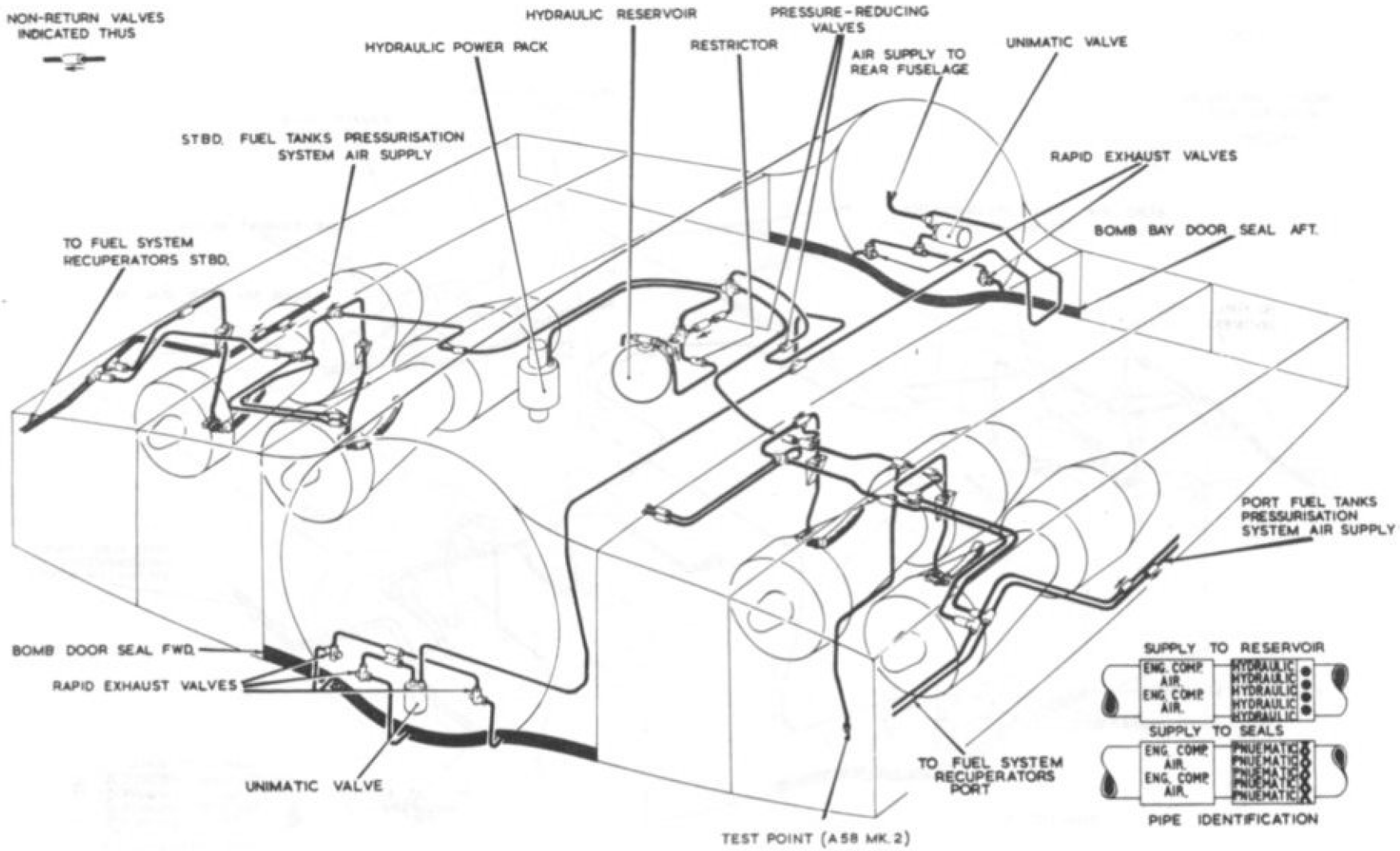

13456

Fig. 8 Pneumatic system installation - ancillary supplies (pre Mod. 2321)

◄ New illustration ►

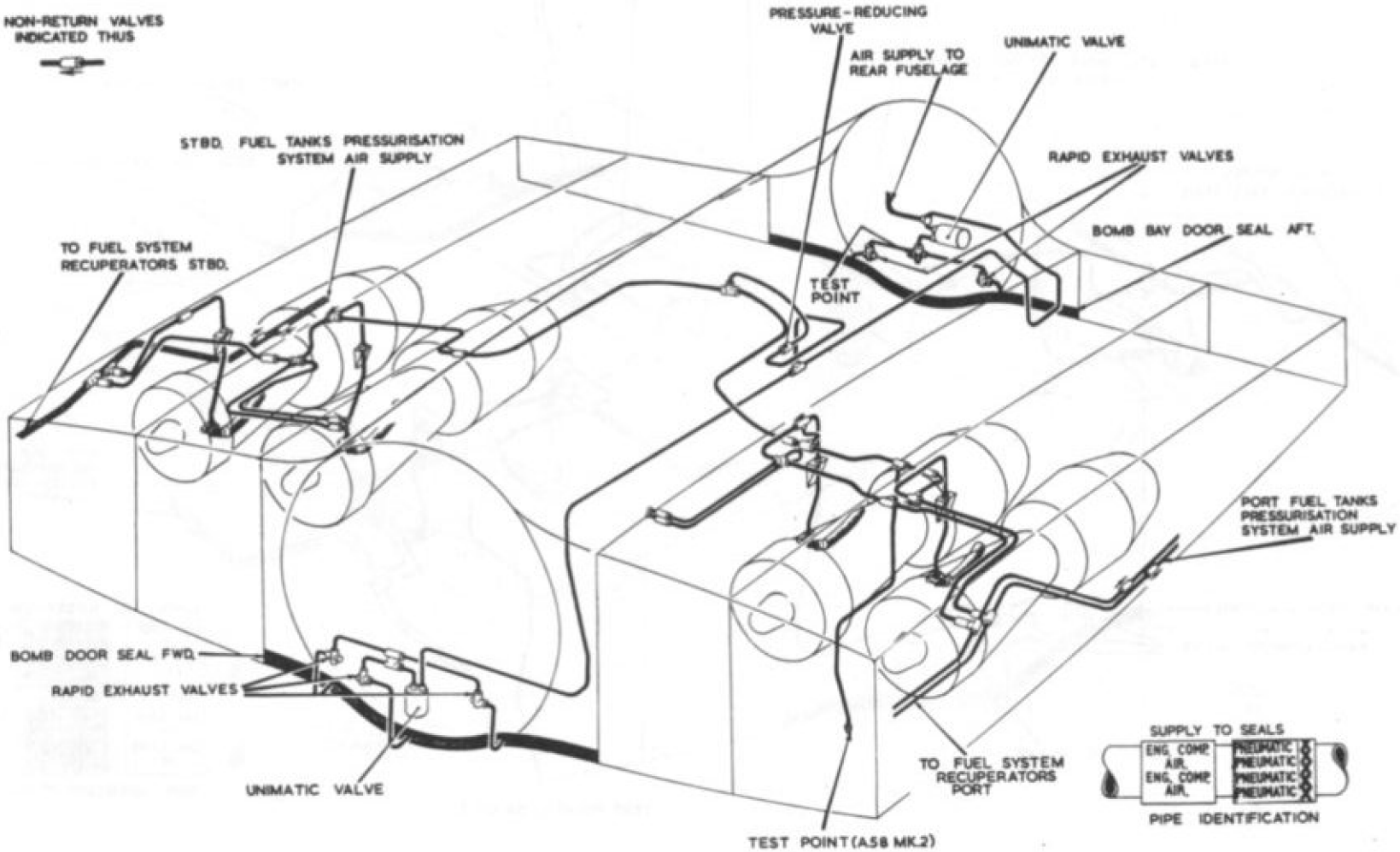

Fig. 8A Pneumatic system installation - ancilliary supplies (post Mod. 2321)

◄Illustration re-titled►

A/533

than 20 sec. Should the leakage exceed this figure again pressurise and check the seals and all connections for leakage using a soap solution. Should this prove non-effective, faulty components are indicated and it will be necessary to remove the components for bench testing and overhaul.

Complete system

68. The complete system can be tested by the following method:-

(1) Ensure that a ground electrical supply is connected to the aircraft.

(2) Attach the ground servicing trolley, if available, to the connection in the port main-wheel bay, adjacent to the hydraulic pump flexible connections.

(3) Examine the bomb door inflatable seals for superficial damage, then select bomb doors CLOSED either on the normal selector switch if a servicing trolley is connected, or on the emergency switch if the trolley is not connected.

(4) Connect an inflation adapter (Ref.No.4G/6246), fitted with a 0 to 600 p.s.i. pressure gauge (para.57), to the A58 charging valve on the port side of the No.2 engine bay.

(5) Pressurise the system to 200 p.s.i. using a high-pressure pneumatic servicing trolley (Ref.No.4F/4).

(6) Shut off the pneumatic supply when the system is pressurised to 200 p.s.i. Allow the pressure to fall to 150 p.s.i., then time the fall from 150 to 50 p.s.i. This should be not less than 5 minutes.

69. Should the pressure drop exceed the figure given in (para.68), (sub-para. 6), a test of the joints and connections should be made using a soap solution.

70. If the pressure loss has been extremely rapid during leakage rate tests of the complete system, and no leaks have been found when using a soap solution, the non-return valves in the supply lines from the engine are suspect; it is probable that extraneous matter is preventing one or more of the valves from closing correctly. These should be removed for bench testing and overhaul.

71. Should the foregoing checks have proved that the supply line from the engines and bomb door seal lines are correct and there is an excessive rate of leakage over the complete system, then that portion of the system supplying the hydraulic components is obviously defective. It will therefore become necessary to bench test the components and rectify as necessary.

Restrictor adjustment

72. When adjustment is required on the restrictor, the recommended method is as follows:-

(1) Disconnect the door from the operating jacks.

(2) Fit a 0-1,200 p.s.i. pressure gauge in the pipe run between the restrictor and the operating jacks.

(3) Ensure that the air cylinders are fully charged, i.e., 2,000 p.s.i.

(4) Screw the restrictor adjuster to fully closed, then open ¼ turn.

(5) Select emergency opening at the main door control lever. Note that with the alighting gear down, the nose wheel leg operated by-pass valve will be closed.

(6) Check the time taken for the gauge to indicate 1,200 p.s.i. - time required is 20-25 secs. and this is to be obtained by adjustment on the restrictor.

(7) Disconnect the mechanical link between the nose wheel leg cross shaft and the by-pass valve.

(8) Simulate alighting gear 'up' by moving the link aft and opening the by-pass valve.

(9) Repeat (5) and (6). The time required is 8 to 18 secs.

NOTE...
The air storage cylinders must be fully charged for all tests.

(10) Connect the by-pass operating link, remove the gauge and return the pneumatic system to normal.

(11) Attach the door to the operating jacks.

(12) Ensure that all locking devices are correctly applied.

(13) Charge the cylinders.

REMOVAL AND ASSEMBLY

73. The removal and/or assembly of individual components is considered a straightforward task, therefore no special sequence of operations are given.

WARNING

RELEASING AIR PRESSURE

Before removal of a component or the release of any union, the air pressure in the system must be discharged by using an inflation adapter (Ref.No. 4G/6246) at the A58 valve of the system concerned.

CHARGING AND TEST POINTS

74. The charging and test points in the aircraft are A.58 Mk.2 valves.

This file was downloaded
from the RTFM Library.

Link: www.scottbouch.com/rtfm

Please see site for usage terms,
and more aircraft documents.