Chapter 4

BOMBING EQUIPMENT

List of contents

	Para.
Introduction	1
DESCRIPTION	
General	2
Septuple carrier AV.179	3
Special carrier AV.176 plus AV.258 fittings	4
No.1, Mk.2 Special carrier plus adapter assembly No.1 Mk.1 ...	8
No.2, Mk.1 carrier plus adapter assembly No.1 Mk.1	10

LIST OF ILLUSTRATIONS

	Fig.
Mounting positions - Carrier AV.179	1
Mounting positions - Carrier AV.176 and fittings AV.258 (1)	2
Mounting positions - Carrier AV.176 and fittings AV.258 (2)	3

Introduction

1. This chapter describes the provision made in the bomb bay for the installation of ancilliary equipment on which are mounted alternative bomb loads. Reference should be made to Sect.6, Chap.1, for information on the electrical circuits and controls and to Sect.1, Chap.2 for an illustration of the air bomber's station. The loading and off-loading of the alternative bomb loads will be described in A.P.2852B.

DESCRIPTION

General

2. The alternative bomb loads are mounted in the bomb bay with the following items of ancilliary equipment:-

(1) Septuple carrier AV.179
or
(2) Special carrier AV.176 plus AV.258
or
(3) No.1, Mk.2 Special carrier (Ref. No.11A/4762) plus adapter assembly No.1, Mk.1 (Ref.No.11A/4763) auxiliary crutch, Type C (Ref.No. 11A/4984) as a tail steadying device
or
(4) No.2, Mk.1 carrier (Ref. No. 11A/4759) plus adapter assembly No.1, Mk.1 (Ref.No.11A/4763).

The mounting positions for each item of the ancilliary equipment are illustrated in Fig.1, 2 and 3 and are described in the following paragraphs.

SEPTUPLE CARRIER AV.179

3. A.V.179 septuple carriers are installed at three positions in the bomb bay as illustrated in Fig.1. The carriers are locked to hoisting and suspension units (Ref.No.11A/4662) which are mounted on ¾ in. bolts in intercostal mounting assemblies between bomb arches 44·592A and 64·592A, 151·919A and 171·842A, and 259·092A and 279·092A. Crutching pads against which the carriers bear are a permanent fixture in the aircraft as illustrated in Fig.1.

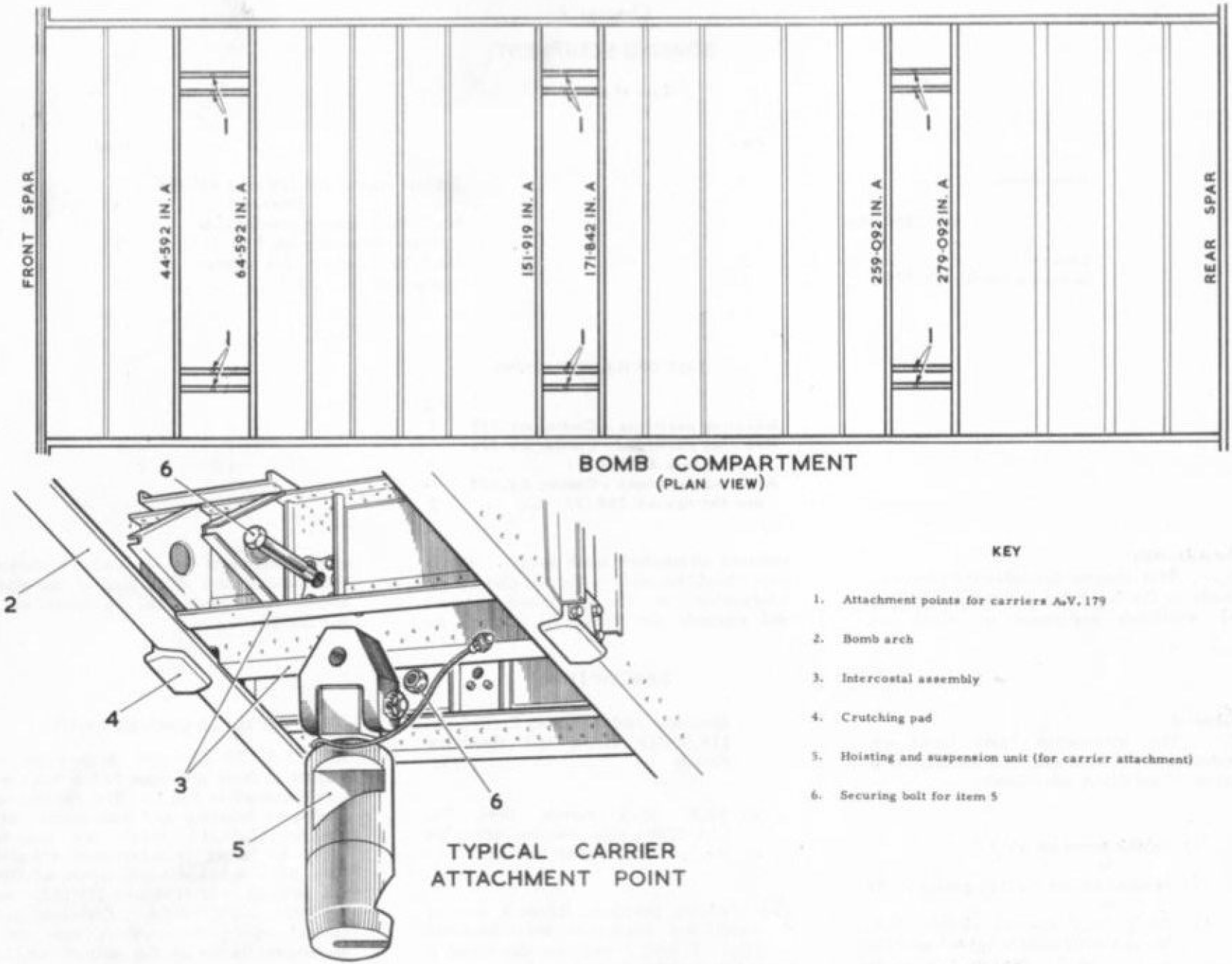

KEY

1. Attachment points for carriers A.V. 179
2. Bomb arch
3. Intercostal assembly
4. Crutching pad
5. Hoisting and suspension unit (for carrier attachment)
6. Securing bolt for item 5

Fig. 1. Mounting positions – carrier A.V. 179.

RESTRICTED

BOMB COMPARTMENT (PLAN VIEW)

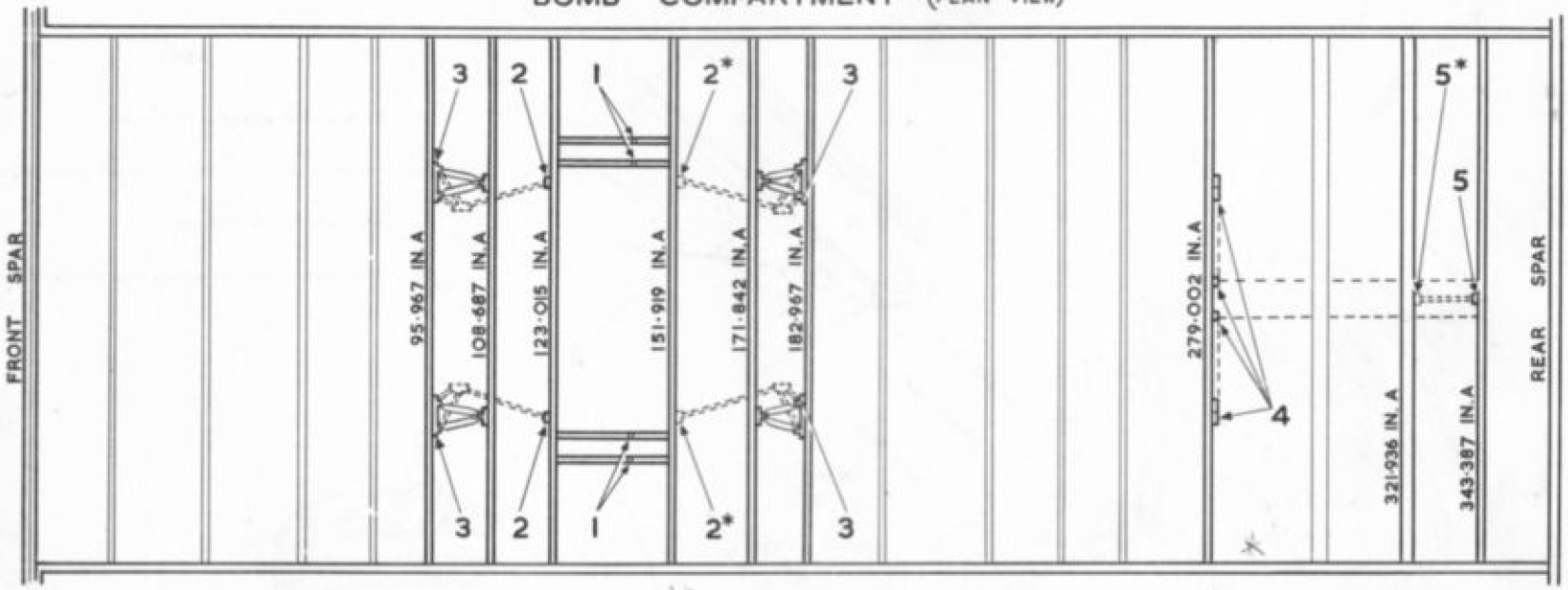

DETAIL OF SUSPENSION UNIT AND BUFFER STOP MOUNTINGS

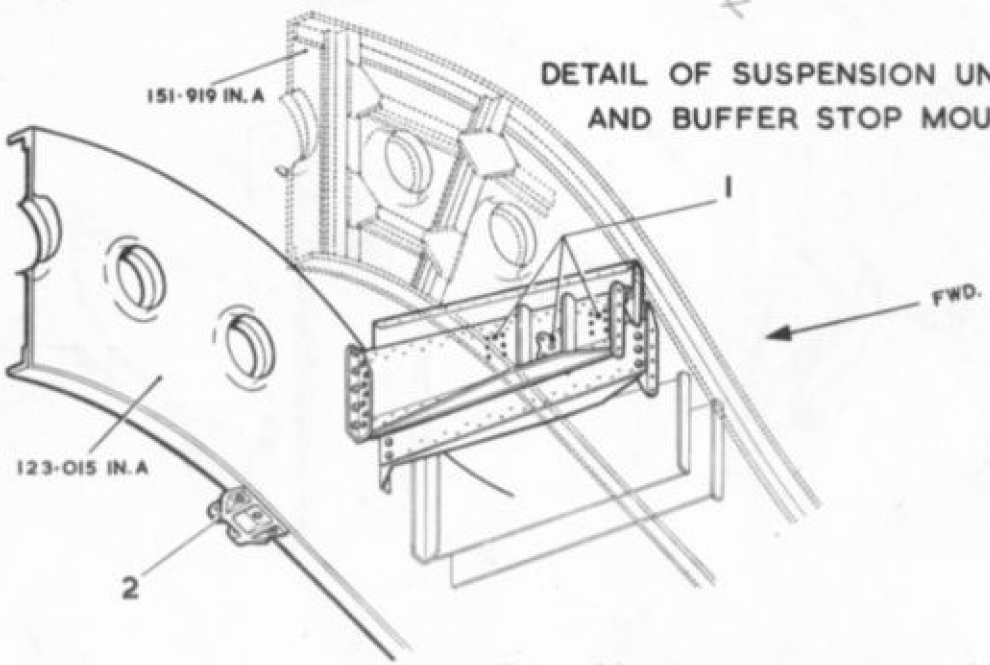

KEY

1. Attachment positions for A. V. 176 special carrier
2. Single strut attachment bracket
3. Crutch attachment positions
4. Aft steady, forward attachment positions
5. Aft steady, aft attachment positions

* Attachment lugs at these positions are part of A. V. 258 fittings and not part of aircraft fixed fittings.

Fig. 2. Mounting positions – carrier A.V. 176 and fittings A.V. 258. (1)

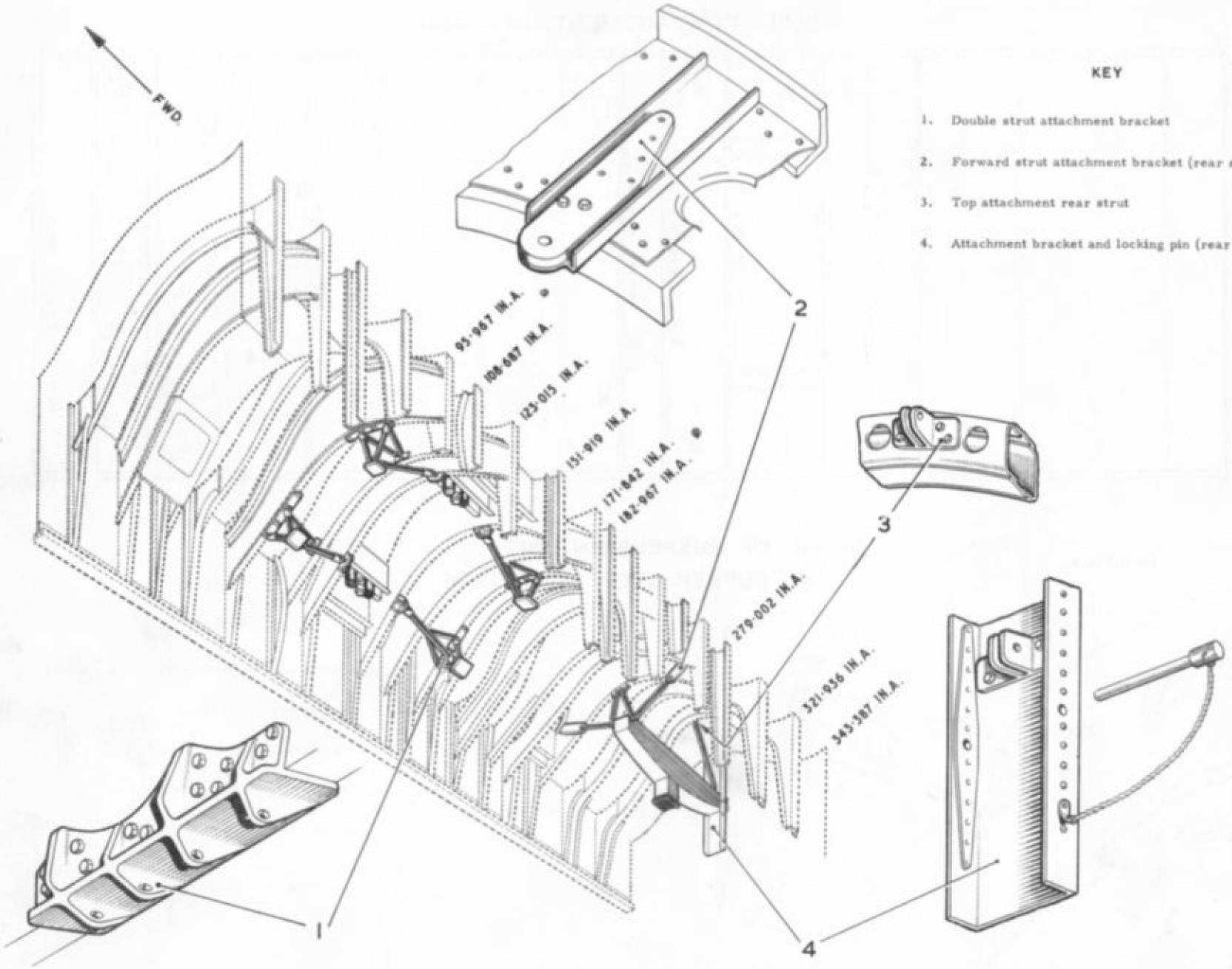

Fig. 3. Mounting positions – carrier A.V. 176 and fittings A.V. 258.(2)

RESTRICTED

SPECIAL CARRIER AV.176 PLUS AV.258 FITTINGS

4. Special carrier A.V.176 is locked to hoisting and suspension units (Ref. No. 11A/4662) which are mounted on ¾ in. bolts in intercostal mounting assemblies between bomb arches 123·015A and 151·919A in a similar manner to that shown in the detail in fig.1. On each side of the bolt mounting, six holes are provided for the installation of buffer stops against which the carrier will bear. Mounting arrangement for the installation of Special Carrier A.V.176 with A.V.258 fittings is shown in fig.2.

5. The items of AV.258 fittings, for which aircraft mountings are provided, are the front and rear crutches and a rear steady. The mounting brackets for the aft crutch arms on bomb arch 151·919A are part of AV.258 fittings and are installed at the positions provided at the same time as the crutches, but the remainder of the crutch mounting brackets are a permanent aircraft fixture on bomb arches 95·967A., 123·105A and 182·967A as illustrated in Fig.3. Each mounting bracket is made to receive either the crutches of AV.241 fittings or AV.258 fittings and the lugs to which the crutch arms should be connected are clearly marked AV.241 or AV.258.

6. With the exception of the mounting bracket for the upper end of the strut at the aft end of the rear steady, which is part of AV.258 fittings to be installed with the steady, the steady mounting brackets are a permanent fixture in the aircraft on bomb arches 279·002A and 343·387A as illustrated in Fig.3. The inner access panel through which the strut at the aft end of the steady passes must be turned over when the strut is in position.

7. Mounting channels for the installation of the fuzing units are built on to bomb arch 95·967A just inboard of the forward crutching mounting brackets.

NO.1, MK.2 SPECIAL CARRIER PLUS ADAPTER ASSEMBLY NO.1, MK.1

8. An attachment beam, part of adapter assembly No.1, Mk.1, is mounted on No.1, Mk.2 special carrier, and locked to hoisting and suspension units (Ref.No. 11A/4662) installed in the same intercostal mounting positions as those used for special carrier AV.176. Buffer stops are installed on each side of the hoisting and suspension unit mounting as with the AV.176 carrier.

9. Front and rear crutch pick-ups are a permanent fixture in the aircraft on bomb arches 108·687A, 123·015A and 182·967A as illustrated in Fig.3, as are the attachment brackets on bomb arches 182·967A and 225·227A for the aft end of auxiliary crutch, Type C (Ref.No.11A/4984) which acts as a tail steadying device.

NO.2, MK.1 CARRIER PLUS ADAPTER ASSEMBLY NO.1, MK.1

10. This installation is the same as that described in para. 8 and 9 except that a different carrier is employed and auxiliary crutch, Type C (Ref.No.11A/4984) is not required as a tail steadying device.

This file was downloaded
from the RTFM Library.

Link: www.scottbouch.com/rtfm

Please see site for usage terms,
and more aircraft documents.