Ref. No.	Part No.	Description 1 2 3 4	No. off	Matl. Spec.	Cl. of St. M.R.	Plate and Illust'n No.
		AUTO-MACH, TRIMMER EQUIPMENT Spares for:— AUTO-MACH, TRIM EQUIPMENT INSTALLATION, PITCH AND YAW GYROS, UNDER 2nd PILOT'S FLOOR (S2398) (Mod. 690) Spares for:—				
	15S2398	Bolt, special, gyro mounting	4	—	MR	EB1/1
	NEWMARK 866	GYRO, PITCH, ASSEMBLY Consisting of:—	1	—		EB1/3
6S/4551509	NDN869	Amplifier, gyro	4	—	A	
6S/4551661	NDN867	MOUNTING, GYRO, PITCH, ASSEMBLY	1	—	A	
6S/4551508	NDN868	Unit, gyro	4	—	A	
	NEWMARK 872	GYRO, YAW, ASSEMBLY Consisting of:—	1	—		EB1/4
6S/4551509	NDN869	Amplifier, gyro	2	—	A	
6S/4551510	NDN873	MOUNTING, YAW, GYRO, ASSEMBLY	1	—	A	
6S/4551508	NDN868	Unit, gyro	2	—	A	
	1S2396	MOUNTING, PITCH GYRO, GROUP	1	—		EB1/5
9224	46SS4700	Spring, for special bolt	4	—	C	EB1/6
		AUTO-STABILISER EQUIPMENT IN BOMB BAY, PORT AND STARBOARD, GROUP (1 & 2R4411) Spares for:—				
	NEWMARK 1353	AMPLIFIER, AUTO-MACH TRIM, ASSEMBLY, PORT	1	—		EB1/7
	NEWMARK 1223	AMPLIFIER, PITCH AND YAW, ASSEMBLY, STARBOARD	1	—		EB1/8
	NEWMARK 897	Unit, pitch, slave relay, starboard	1	—		EB1/9
		MOUNTING, GYRO UNIT, FOR YAW DAMPER SYSTEM (S2144) Spares for:—				
	3S2144	CARRIER, GYRO UNIT, GROUP ATTACHMENTS—CARRIER PART No. 3S2144	—	—		EB1/10
28D/9436920	A25/1C	Bolt, 2 BA	4	—	C	EB1/11
28M/1012015	AGS2001/C1/66	Nut, stiff, 2 BA	4	—	C	
28W/9419402	SP13/C	Washer, 2 BA	4	—	C	

Ref. No.	Part No.	Description 1 2 3 4	No. off	Matl. Spec.	Cl. of St. M.R.	Plate and Illust'n No.
		MOUNTING, GYRO UNIT, FOR YAW DAMPER SYSTEM (S2144) (Cont'd)				
6S/4551392	IN20322	Unit, gyro	1	—	A	EB1/12
		ATTACHMENTS—GYRO UNIT REF. No. 6S/1				
28D/1010658	A25/1B	Bolt, 4 BA	3	—	C	EB1/13
28W/9419465	SP13/B	Washer, 4 BA	3	—	C	
		MOUNTING, MACH-METER, FOR AUTO-TRIM SERVO (S2152)				
		Spares for:—				
	1S2148	BRACKET, MACH-METER, ANTI-VIBRATION, MOUNTING, GROUP	1	—		EB1/14
6S/4551478	NEWMARK 186-M38	Mach-meter	1	—	A	EB1/15
		PANEL, AUTO-STABILISER INSTALLATION, IN CREW'S COMPARTMENT (S2038)				
		Spares for:—				
	1S2148	Bracket, mounting	1	—		EB1/16
	NEWMARK 186-M8	Monitor, air speed	1	—		EB1/17
	2aS2038	Panel	1	—		EB1/18
6S/4551410	NEWMARK NDN654	Tray	1	—	B	EB1/19
6S/4551411	NEWMARK NDN655	Tray	1	—	B	EB1/20
6S/4551412	NEWMARK NDN653	Tray	1	—	B	EB1/21
	NEWMARK 186-M1	Unit, amplifier	1	—		EB1/22
	NEWMARK 186-M5	Unit, phase advance, yaw damper	1	—		EB1/23
6S/6340962	NEWMARK NDN459	Unit, slave relay	1	—	A	EB1/24

CONTROLS

AUTO-STABILISER

SUMMARY OF STANDARD ITEMS

Stores Ref.		No. off	Stores Ref.		No. off	Stores Ref.		No. off
Section	Ref. No.		Section	Ref. No.		Section	Ref. No.	
28D	1010658	3	28M	1278190	4	28W	9419402	4
28D	9436920	4				28W	9419465	3

PLATE No EB1
ISSUE 1

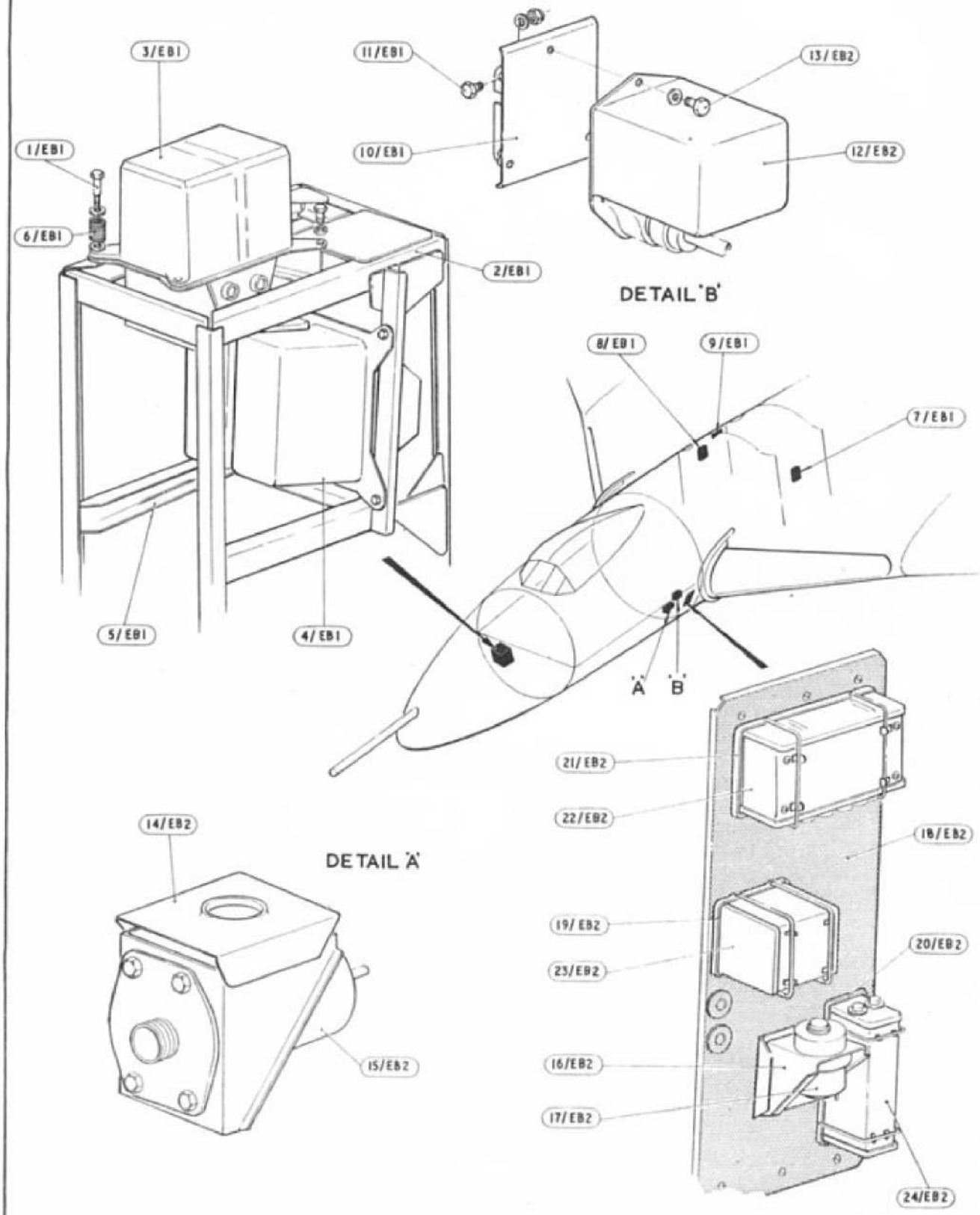

CONTROLS
AUTO STABILISER

This file was downloaded
from the RTFM Library.

Link: www.scottbouch.com/rtfm

Please see site for usage terms,
and more aircraft documents.