ENGINE IN CREW'S NACELLE FUSELAGE

Ref. No.	Part No.	Description 1 2 3 4	No. off	Matl. Spec.	Cl. of St. M.R.	Plate and Illust'n No.
		CONTROLS, ENGINE, ASSEMBLIES IN CREW'S NACELLE (100.O.3948) (Mod. 889)				
		Spares for:—				
	1.O.3964	BEARING, PRESSURE SEAL, GROUP	4	—		EC5/1
		Spares for:—				
	HOFFMANN CJ/7L	Bearing	1	—		
	GLACIER 06/DU/08	Bush	1	—	MR	EC5/2
	4.O.3964	Bush, special	1	—	MR	EC5/3
28N/2001541	AGS2031/6	Circlip	1	—	C	EC5/4
	6.O.3964	Circlip	1	—	MR	EC5/5
1505205	2.O.3964	Housing, bearing	1	—	C	
1505206	3.O.3964	Plate, end	1	—	C	
1433673	5.O.3964	Seal	1	—	C	
		CONSOLE, PILOT'S ENGINE, CENTRE (35O3762) (Pre Mod. 980)				
		CONSOLE, PILOT'S ENGINE, CENTRE (46O3762) (Mod. 980)				
		Spares for:—				
	1V13894	BOX, SWITCH, MOUNTING, GROUP (Mod. 1977)	1	—		EC1/6
		Spares for:—				
17496	2V13894	Box, switch mounting	1	—	C	
1432678	2V14310	Cover (Mod. 2087)	1	—	C	
5CW/9438526	—	Switch	1	—	B	
12958	58.O.3662	COUNTERSHAFT AND LEVERS, GROUP	1	—	A	
		Spares for:—				
	56.O.3662	Bolt, attachment, connecting rods to levers	8	K. MONEL	MR	EC2/7
	43.O.3662	Collar, for connecting rods to levers	16	—	MR	EC2/8
	37.O.3662	LEVER, L.H. INNER, GROUP	1	—	MR	EC2/9
	38.O.3662	LEVER, R.H. INNER, GROUP	1	—	MR	EC2/10
	39.O.3662	LEVER, L.H. OUTER, GROUP	1	—	MR	EC2/11
	40.O.3662	LEVER, R.H. OUTER, GROUP	1	—	MR	EC2/12
		Spares for:—				
2A/9500415	R. & M. CK-1/2" A	Bearing	2	—	C	
17948	14SS5880	Plate, securing	1	—	C	
	29.O.3662	ROD, CONNECTING, COUNTER-SHAFT LEVERS TO THROTTLE LEVERS, GROUP	4	—	MR	EC2/13
	30.O.3662	ROD, CONNECTING, COUNTER-SHAFT TO OUTER LEVERS, PILOT'S FLOOR, GROUP	2	—	MR	EC2/14

Ref. No.	Part No.	Description (1 2 3 4)	No. off	Matl. Spec.	Cl. of St. M.R.	Plate and Illust'n No.
		COUNTERSHAFT AND LEVERS, GROUP (58.O.3662) (Cont'd)				
	31.O.3662	ROD, CONNECTING, COUNTERSHAFT TO INNER LEVERS, PILOT'S FLOOR, GROUP	2	—	MR	EC2/15
		Spares for:—				
1312	68.O.3662	END-FITTING, C/W BEARING, GROUP	2	—	C	EC2/16
		Consisting of:—				
	ROSE BROS. R.B.J.6	Bearing, roller	1	—		
	ROSE BROS. R.B.J.4	Housing, roller	1	—		
2940	45.O.3662	Spindle, for countershaft levers	1	K. MONEL	C	EC2/1
	41.O.3662	SUPPORT, SPINDLE, R.H., GROUP	1	—	MR	EC2/18
	42.O.3662	SUPPORT, SPINDLE, L.H., GROUP	1	—	MR	EC2/14
	46.O.3662	Washer, spacer, between countershaft levers	3	L65	MR	
	3S2042	Guard, switch	1	—		EC1/20
5528	1Z7675	HANDLE, OPERATING, EMERGENCY AIR CONTROL, GROUP	1	—	MR	EC2/21
9556	1Z7757	HANDLE, OPERATING, PARKING BRAKE CONTROL, GROUP	1	—	MR	EC2/22
		Spares for:—				
	2Z7757	FORK-END, GROUP	1	—	MR	
		Spares for:—				
	1SS4084	Bush	2	HTS	MR	
	9Z7757	Handle	1	DTD298		
	8Z7757	Spring	1	—	MR	
	43.O.3762	HOUSING, SWITCH, GROUP (Mod. 980)	1	—		EC1/23
		Spares for:—				
4645	22SS4204	Bush	1	—	C	
	231SS6006	Label	1	—		EC1/24
	232SS6006	Label	1	—		EC1/25
8810	23.O.3762	LEVERS, THROTTLE AND STOPS, GROUP (Pre-Mod. 980)	1	—	A	EC3/26
	65.O.3762	LEVERS, THROTTLE AND STOPS, GROUP (Mod. 980)	1	—		
		Spares for:—				
	56.O.3662	Bolt, attachment, rods to levers	4	K. MONEL	MR	EC3/8
5531	12.O.3762	CAM, DAMPER, GROUP	1	—	C	EC3/27
	10.O.2762	CAM, DAMPER, GROUP	1	—	MR	EC3/28
		Spares for:—				
	10b.O.3762	Bush (Oilite—CT.51 x 3/4" long)	1	—		
	10a.O.3762	Cam	1	L65		
	43.O.3662	Collar, for connecting rods to levers	8	—	MR	EC3/9

ENGINE IN CREW'S NACELLE, FUSELAGE

Ref. No.	Part No.	Description (1 2 3 4)	No. off	Matl. Spec.	Cl. of St. / M.R.	Plate and Illust'n No.
		LEVERS, THROTTLE AND STOPS, GROUP (23.O.3762) (Pre Mod. 980) (65.O.3762) (Mod. 980) (Cont'd)				
	34.O.3662	Disc, friction, between levers	3	Ferrobestos	MR	EC3/29
	36.O.3662	Disc, friction, between levers	4	Ferrobestos	MR	EC3/30
8912	13.O.3762	GATE, THROTTLE LEVER, GROUP (Pre-Mod. 980)	1	—	C	EC1/31
1505064	36.O.3762	GATE, THROTTLE LEVER, GROUP (Mod. 980)	1	—	C	
	3.O.3762	LEVER, THROTTLE, PORT, INNER, GROUP	1	—	MR	EC3/32
	4.O.3762	LEVER, THROTTLE, STARBOARD, INNER, GROUP	1	—	MR	EC3/33
9454	5.O.3762	LEVER, THROTTLE, PORT OUTER, GROUP (Pre-Mod. 980)	1	—	B	EC3/34
	67.O.3762	LEVER, THROTTLE, PORT OUTER, GROUP (Mod. 980)	1	—	MR	
	6.O.3762	LEVER, THROTTLE, STARBOARD OUTER, GROUP (Pre-Mod. 980)	1	—	MR	EC3/35
13728	68.O.3762	LEVER, THROTTLE, STARBOARD OUTER, GROUP (Mod. 980)	1	—	B	
		Spares for:—				
12294	11f.O.3662	Bush (Oilite CT.51)	1	—	C	
	3c.O.3762	Knob	1	B6	MR	
5534	28.O.3762	Screw, special	1	B6	C	
	3e.O.3762	Spring, leaf (24G spring steel)	1	—	MR	
	1.O.4115	SWITCH, CUT OUT, PORT, GROUP (Mod. 980)	1	—	MR	EC3/36
	2.O.4115	SWITCH, CUT OUT, STARBOARD, GROUP (Mod. 980)	1	—	MR	
	DUNLOP					
5CW/4706418	ACM.17856	Switch, relight (Pre-Mod. 2400)	4	—	B	EC3/37
5930—99—4706418	ACM26960	Switch, relight (Mod. 2400)	4	—	B	
	123.O.3662	Tube, distance	1	B158	MR	
22196	69.O.3762	LEVER, LOCKING, GROUP (Mod. 1856)	1	—	B	EC3/38
		Spares for:—				
	51.O.3762	Bush	1	BSS369		
	9c.O.3556	Knob	1	DTD771		
	70.O.3762	Lever, locking	1	—		
17025	71.O.3762	Spacer	1	S93	C	
	49.O.3762	Spring	1	DTD215	MR	
	52.O.3762	Stop	1	S93		
	27.O.3762	Plate, cover (Pre Mod. 980)	1	L72		EC1/39
	45.O.3762	Plate, cover (Mod. 980)	1	L72		

Ref. No.	Part No.	Description 1 2 3 4	No. off	Matl. Spec.	Cl. of St. / M.R.	Plate and Illust'n No.
		LEVERS, THROTTLE AND STOPS, GROUP (23.O.3762) (Pre Mod. 980) (65.O.3762) (Mod. 980) (Cont'd)				
	7.O.3762	PLATE, SIDE, PORT THROTTLE LEVERS, GROUP	1	–	MR	EC3/40
	8.O.3762	PLATE, SIDE, STARBOARD THROTTLE, GROUP	1	–	MR	EC3/41
	17.O.3762	Plate, stop, levers, port	2	DTD171B	MR	EC1/42
8172	18.O.3762	Plate, stop, levers, starboard	2	DTD171B	C	EC1/43
8173	25.O.3762	Plate, stop, levers, port	2	DTD171B	C	EC1/44
8174	26.O.3762	Plate, stop, levers, starboard	1	DTD171B	C	EC1/45
	137.O.3662	Shim, for spindle at locking lever (if required)	1	–	MR	EC3/46
	157.O.3662	Shim, for spindle, between port outer throttle and dumper cam (if required)	1	–	MR	EC3/47
	174.O.3662	Shim, for spindle at dumper cam (if required)	1	–		EC3/48
	9.O.3762	Spindle, throttle, lever	1	L. MONEL	MR	EC3/49
5532	19.O.3762	STRIP, SLIDING, INNER, GROUP	2	–	C	EC1/50
5533	22.O.3762	STRIP, SLIDING, OUTER, GROUP	2	–	C	EC1/51
	15.O.3662	Washer, for spindle	1	DTD.364B	MR	
		PANELS, FUEL CONTENTS, GROUP (9S2150) (See:–Equipment–Instrument Panels)				
	2SS4098	Pin, special, for attachment of parking brake handle	1	S96	MR	
	132.O.3662	ROD, CONNECTING, FROM EMERGENCY AIR CONTROL AND PARKING BRAKE HANDLES, GROUP	2	–		EC2/52
		Spares for:–				
	25.O.3506	ROD, END, ADJUSTABLE, GROUP	1	–	MR	EC2/53
		Spares for:–				
28R/4665592	R. & M. CM.3/16"B	Bearing, rod-end	1	–	C	
	44.O.3506	ROD, END, FIXED, GROUP	1	–	MR	EC2/54
		Spares for:–				
28R/4665592	R. & M. CM.3/16"B	Bearing, rod-end	1	–	C	
		STRUCTURE, CONSOLE (59.O.3662)				
		Spares for:–				
	1S2026	CONTAINER, FUEL CONTENTS GAUGE, GROUP	1	–		EC1/55
2934	10.O.3662	PANEL, ACCESS, TO ENGINE CONTROL COUNTERSHAFT, GROUP	1	–	C	EC1/56
		ATTACHMENTS–PANEL, PART No. 10.O.3662				
28S/9446545	A45/C16	Screw, csk. hd., 2 BA	24	–	C	EC1/57
5CW/4405040	–	Switch, toggle, fuel contents panel	1	–	A	EC1/58

ENGINE, IN CREW'S NACELLE, FUSELAGE

Ref. No.	Part No.	Description 1 2 3 4	No. off	Matl. Spec.	Cl. of St. M.R.	Plate and Illust'n No.
		CONSOLE, PILOT'S ENGINE, CENTRE (35.O.3762) (Pre-Mod. 980) (46.O.3762) (Mod. 980) (Cont'd)				
		SWITCHES AND MOUNTING, ENGINE CONSOLE (1V9386)	—			EC1/59
		Spares for:–				
	31SS4204	Bush, ring lock	1	–	MR	
5CW/1039506	ENG. ELECTRIC ZA2402/1	Guard, for switch	2	–	A	
	3V9386	HOLDER, SWITCH, GROUP	1	–		
		Spares for:–				
	86SS6005	Label, "R.P.M. Governor, J.P.T. limiter"	1	L59		
	87SS6005	Label, "J.P.T. limiter, on-off"	1	L59		
	88SS6005	Label, "Take of cruise"	1	L59		
5CW/4405757	ROTAX N.135531	Plate, shroud	4	–	C	
5CW/4405756	ROTAX N.135530	Shroud	2	–	C	
	—	Switch (Pre-Mod. 692)	2	–		
5CW/1047697	—	Switch (Mod. 692)	2	–	A	
	1V6768	SWITCH, COMBINED AIR BRAKE AND COCKPIT LIGHTING, GROUP	1	–	MR	EC1/60
		Spares for:–				
	16V6768	FAIRING, GROUP	1	–		
5L/9951272	–	Filament, 28V., 35W. clear	2	–	C	
	11V6768	Gate, safety	1	DTD171B		
	8V6768	Guard, L.H.	1	L72	MR	
	9V6768	Guard, R.H.	1	L72		
	1V7020	HANDLE, OPERATING, WITH SAFETY PLUNGER, GROUP	1			EC1/61
		Consisting of:–				
	2V7020	HANDLE, GROUP	1	–		
	3V7020	Peg, locating	1	DTD176		
	6V7020	Plunger	1	DTD176		
	AT30211	Spring, helical	1	–		
	310SS6004	Label, "Air brake operation"	1	DTD213		
	10V6768	Plate, cover	1	L72		
10AE/1959461	LP.183328	Socket, lamp	2	–	C	
28W/1097257	1906/1	Washer, shakeproof, 4 BA	8	–	C	
17616	17V6768	Window (Red Celestoid)	1	–	C	
		ATTACHMENTS–SWITCH, PART No. 1V6768				
28D/1220032	AS2923/2B	Bolt, mush. hd., 4 BA	2	–	C	
28M/1278189	AGS2001/B/1	Nut, stiff, 4 BA	2	–	C	
28W/9128924	SP14/C	Washer, 2 BA	2	–	C	
28W/9419465	SP13/B	Washer, 4 BA	2	–	C	
5CW/4182	–	Switch	1	–	A	EC1/62
5CW/9438526	,–	Switch (Mod. 980) (Pre-Mod. 2375)	1	–	A	EC1/63
5CW/5058	C5162–YMK4	Switch (Mod. 2375)	1	–	B	

CONTROLS

ENGINE, IN CREW'S NACELLE, FUSELAGE

Ref. No.	Part No.	Description 1 2 3 4	No. off	Matl. Spec.	Cl. of St. / M.R.	Plate and Illust'n No.
		CONSOLE, PILOT'S ENGINE CENTRE (35.O.3762) (Pre Mod. 980) (46.O.3762) (Mod. 980) (Cont'd)				
		SWITCH, EMERGENCY AIR CONTROL, GROUP (1Z7674)	—			EC2/64
		Spares for:–				
	4Z7647	FAIRLEAD, GROUP	1	–		
	6Z7674	Pawl	1	S1 or S3		
	9Z7674	Plate, top	1	L72		
2955	7Z7674	Spring (18G Piano wire)	1	–	C	
5CW/4368	–	Switch, micro	1	–	A	
12953	83.O.3948	FAIRLEAD, AT FORMER 218, FOR CONTROL RODS, PORT, GROUP		–	C	EC5/65
		Spares for:–				
	58b.Z.9642	Fairlead	1	BSS972		EC5/66
	58c.Z.9642	Fairlead	1	BSS972		EC5/67
	1.O.3520	FAIRLEAD, ROLLER, GROUP	1	–	MR	EC5/68
		Spares for:–				
	4.O.3520	ROLLER, GROUP	3	–	MR	EC5/69
	77.O.3948	FAIRLEAD, ROLLER, GROUP	2	–	MR	EC5/70
		Spares for:–				
	77a.O.3948	ROLLER, GROUP	3	–	MR	EC5/71
	89.O.3948	FAIRLEAD, AT FORMER 218, FOR CONTROL RODS, STARBOARD, GROUP	1	–		EC5/72
		Spares for:–				
	77.O.3948	FAIRLEAD, ROLLER, GROUP	2	–	MR	EC5/70
		Spares for:–				
	77a.O.3948	ROLLER, GROUP	3	–	MR	EC5/71
12955	85.O.3948	FAIRLEAD, AT FORMER 246, FOR CONTROL RODS, PORT, GROUP	1	–	C	EC5/73
		Spares for:–				
	56b.Z9642	Fairlead	1	BSS972		EC5/73a
	1.O.3520	FAIRLEAD, ROLLER, GROUP	1	–	MR	EC5/68
		Spares for:–				
	4.O.3520	ROLLER, GROUP	3	–	MR	EC5/69
	77.O.3948	FAIRLEAD, ROLLER, GROUP	2	–	MR	EC5/70
		Spares for:–				
	77a.O.3948	ROLLER, GROUP	3	–	MR	EC5/71
12956	94.O.3948	FAIRLEAD, AT FORMER 246, FOR CONTROL RODS, STARBOARD, GROUP	1	–	C	EC5/74
		Spares for:–				
	77.O.3948	FAIRLEAD, ROLLER, GROUP	2	–	MR	EC5/70
		Spares for:–				
	77a.O.3948	ROLLER, GROUP	3	–	MR	EC5/71

ENGINE, IN CREW'S NACELLE, FUSELAGE

Ref. No.	Part No.	Description 1 2 3 4	No. off	Matl. Spec.	Cl. of St. / M.R.	Plate and Illust'n No.
12954	84.O.3948	FAIRLEAD, AT FORMER 274, FOR CONTROL RODS, PORT, GROUP	1	–	C	EC5/75
		Spares for:–				
	55bZ9642	Fairlead	1	BSS972		EC5/76
	1.O.3520	FAIRLEAD, ROLLER, GROUP	1	–	MR	EC5/68
		Spares for:–				
	4.O.3520	ROLLER, GROUP	3	–	MR	EC5/69
	77.O.3948	FAIRLEAD, ROLLER, GROUP	2	–	MR	EC5/70
		Spares for:–				
	77a.O.3948	ROLLER, GROUP	3	–	MR	EC5/71
	93.O.3948	FAIRLEAD, AT FORMER 274, FOR CONTROL RODS, STARBOARD, GROUP	1	–		EC5/77
		Spares for:–				
	77.O.3948	FAIRLEAD, ROLLER, GROUP	2	–	MR	EC5/70
		Spares for:–				
	77a.O.3948	ROLLER, GROUP	3	–	MR	EC5/71
12952	82.O.3948	FAIRLEAD, AT FORMER 302, FOR CONTROL RODS, PORT, GROUP	1	–	C	EC4/78
		Spares for:–				
	54bZ9642	Fairlead	1	–		EC4/79
	1.O.3520	FAIRLEAD, ROLLER, GROUP	1	–	MR	EC4/68
		Spares for:–				
	4.O.3520	ROLLER, GROUP	3	–	MR	EC4/69
	77.O.3948	FAIRLEAD, ROLLER, GROUP	2	–	MR	EC4/70
		Spares for:–				
	77a.O.3948	ROLLER, GROUP	3	–	MR	EC4/71
	90.O.3948	FAIRLEAD, AT FORMER 302, FOR CONTROL RODS, STARBOARD, GROUP	1	–		EC4/80
		Spares for:–				
	77.O.3948	FAIRLEAD, ROLLER, GROUP	2	–	MR	EC4/70
		Spares for:–				
	77a.O.3948	ROLLER, GROUP	3	–	MR	EC4/71
1433671	78.O.3948	FAIRLEAD, AT FORMER 316, FOR CONTROL RODS, PORT, GROUP	1	–	C	EC4/81
		Spares for:–				
	78E.O.3948	Bearing	2	–		EC4/82
28D/9453970	A25/15C	Bolt, 2 BA	3	–	C	
28D/1010029	A25/6B	Bolt, 4 BA	4	–	C	
	78a.O.3948	Fairlead	1	–		EC4/83
	27b.O.3506	Fairlead	1	–		EC4/84
28M/1012015	AGS2001/C1/66	Nut, stiff, 2 BA	3	–	C	
28M/1278189	AGS2001/B/1	Nut, stiff, 4 BA	4	–	C	
28W/9419402	SP13/C	Washer, 4 BA	3	–	C	
28W/9419465	SP13/B	Washer, 4 BA	4	–	C	

CONTROLS

ENGINE, IN CREW'S NACELLE, FUSELAGE

Ref. No.	Part No.	Description 1 2 3 4	No. off	Matl. Spec.	Cl. of St. M.R.	Plate and Illust'n No.
1433672	95.O.3948	FAIRLEAD, AT FORMER 316, FOR CONTROL RODS, STARBOARD, GROUP	1	–	C	EC4/85
		Spares for:–				
	78e.O.3948	Bearing	2	–		EC4/82
28D/9453970	A25/15C	Bolt, 2 BA	3	–	C	
28D/1010029	A25/6B	Bolt, 4 BA	4	–	C	
	95a.O.3948	Fairlead	1	–		EC4/86
	27b.O.3506	Fairlead	1	–		EC4/84
28M/1012015	AGS2001/C1/66	Nut, stiff, 2 BA	3	–	C	
28M/1278189	AGS2001/B/1	Nut, stiff, 4 BA	4	–	C	
28W/9419402	SP13/C	Washer, 2 BA	3	–	C	
28W/9419465	SP13/B	Washer, 4 BA	4	–	C	
		ATTACHMENTS–ROLLER, PART Nos. 4.O.3520 & 77a.O.3948				
28P/7132521	SP/4/Y/B7	Pin	60	–	C	
28P/9710567	SP90/C4	Pin, split, 1/16" dia. (SP9/C5)	60	–	C	
28W/9419454	SP10/C	Washer, 2 BA	60	–	C	
		ATTACHMENTS–FAIRLEAD, ROLLER PART Nos. 56bZ, 58bZ & 58bZ9642, 1.O.3520 and 77.O.3948				
28D/9436920	A25/1C	Bolt, 2 BA	60	–	C	
28D/9133011	A25/2C	Bolt, 2 BA	6	–	C	
28D/1008149	A25/2B	Bolt, 4 BA	2	–	C	
28M/1012015	AGS2001/C1/66	Nut, stiff, 2 BA	66	–	C	
28M/1278189	AGS2001/B/1	Nut, stiff, 4 BA	2	–	C	
28W/9419454	SP10/C	Washer, 2 BA	66	–	C	
28W/9419401	SP10/B	Washer, 4 BA	2	–	C	
		ATTACHMENTS–FAIRLEAD, PART Nos. 78, 82, 83, 84, 85, 89, 90, 93, 94 and 95.O.3948				
28D/9436920	A25/1C	Bolt, 2 BA	42	–	C	
28D/7002428	A25/6C	Bolt, 2 BA	4	–	C	
28M/1012015	AGS2001/C1/66	Nut, stiff, 2 BA	46	–	C	
28W/9419475	SP15/C	Washer, 2 BA	12	–	C	
28W/9419402	SP15/C	Washer, 2 BA	34	–	C	
		LEVER, CONTROL, UNDER PILOT'S FLOOR, PORT AND STARBOARD				
	1.O.3659	LEVER, CONTROL, PORT, GROUP	1	–		
	2.O.3659	LEVER, CONTROL, STARBOARD, GROUP	1	–		
		Spares for:–				
	17.O.3659	BRACKET, COMPLETE WITH LEVERS, PORT, GROUP	1	–	MR	EC2/87
	18.O.3659	BRACKET, COMPLETE WITH LEVERS, STARBOARD, GROUP				
		Spares for:–				
	23.O.3659	Bolt, csk. hd., 2 BA	2	–		
	3.O.3659	BRACKET, LEVER, PORT, GROUP	1	–	MR	EC2/88
	4.O.3659	BRACKET, LEVER, STARBOARD, GROUP	1	–		

ENGINE, IN CREW'S NACELLE, FUSELAGE

Ref. No.	Part No.	Description (1 2 3 4)	No. off	Matl. Spec.	Cl. of St. M.R.	Plate and Illust'n No.
		BRACKET, COMPLETE WITH LEVERS, PORT AND STARBOARD, GROUPS (17 & 18.O.3659) (Cont'd)				
1510670	11.O.3659	LEVER, PORT, GROUP	1	—	B	EC2/89
1510678	14.O.3659	LEVER, PORT, GROUP	1	—	B	EC2/90
	12.O.2659	LEVER, STARBOARD, GROUP	1	—	MR	EC2/91
1510675	13.O.3659	LEVER, STARBOARD, GROUP	1	—	B	EC2/92
		Spares for:—				
2A/9500411	R & M CK1/4"C	Bearing	2	—	C	
5882	W & S No. 10 or PP33844/54/10	Plate, securing	1	—	C	
	AS2806/5/113	Tube, distance	1	—		EC2/93
	AS2806/5/025	Tube, distance	2	—		EC2/94
		ATTACHMENTS—LEVER, PART Nos. 11, 12, 13 & 14.O.3659				
28D/1212213	A57/13E	Bolt, 1/4" BSF	2	—	C	EC2/95
28D/1212221	A57/24E	Bolt, 1/4" BSF	2	—	C	EC2/96
28M/4095947	A58/ES	Nut, slotted, 1/4" BSF	4	—	C	
28P/9527619	SP90/C7	Pin, split, 1/6" dia.	4	—	C	
28W/9418921	SP13/E	Washer, 1/4"	4	—	C	
		ATTACHMENTS—BRACKET, PART Nos. 17 & 18.O.3659				
28D/9436920	A25/1C	Bolt, 2 BA	16	—	C	EC2/97
28M/1012015	AGS2001/C1/66	Nut, stiff, 2 BA	16	—	C	
28W/9419402	SP13/C	Washer, 2 BA	16	—	C	
	100.O.4310	MECHANISM, FLIGHT IDLING DETENT, PORT, GROUP (Mod. 1649)	1	—		EC4/98
	101.O.4310	MECHANISM, FLIGHT IDLING DETENT, STARBOARD, GROUP (Mod. 1649)	1	—		EC4/99
	87.O.3948	Plate, seal, at rear pressure bulkhead, port	1	—		EC5/100
	94D9460	Plate, seal, at rear pressure bulkhead, starboard	1	—		EC5/101
1314	12.O.3651	ROD, CONTROL, TOP, FROM LEVER BELOW PILOT'S CONSOLE TO LEVER ON TORQUE SHAFT, GROUP	2	—	B	EC4/102
1315	13.O.3651	ROD, CONTROL, BOTTOM, FROM LEVER BELOW PILOT'S CONSOLE, TO LEVER ON TORQUE SHAFT, GROUP	2	—	B	EC4/103
		Spares for:—				
1316	25.O.3506	ROD, END, ADJUSTABLE, GROUP	1	—	C	EC4/53
		Spares for:—				
28R/4665592	R & M CM3/16"B	Bearing, rod, end	1	—	C	
1317	27.O.3516	ROD, END, FIXED, GROUP	1	—	C	EC4/104
		Spares for:—				
28R/4665592	R & M CM3/16"B	Bearing, rod end	1	—	C	

CONTROLS

ENGINE, IN CREW'S NACELLE, FUSELAGE

Ref. No.	Part No.	Description (1 2 3 4)	No. off	Matl. Spec.	Cl. of St. M.R.	Plate and Illust'n No.
1318	16.O.3506	ROD, CONTROL, TOP AND BOTTOM, FROM LEVER ON TORQUE SHAFT BELOW PILOT'S FLOOR, TO JOINT BETWEEN FORMERS 302 AND 316, GROUP	4	—	B	EC4/105
		Spares for:—				
1316	25.O.3506	ROD, END, ADJUSTABLE, GROUP	1	—	C	EC4/53
		Spares for:—				
28R/4665592	R. & M. CM3/16"B	Bearing, rod end	1	—	C	
1319	44.O.3506	ROD, END, FIXED GROUP	1	—	C	EC4/54
		Spares for:—				
28R/4665592	R. & M. CM3/16"B	Bearing, rod end	1	—	C	
	183.O.3948	ROD, CONTROL, TOP, BETWEEN FORMER 316 AND REAR PRESSURE BULKHEAD, GROUP	2	—		EC5/106
		Spares for:—				
	30.O.4310	ADJUSTER, GROUP	1	—		EC5/107
		Spares for:—				
	29.O.4310	Bracket	1	—		
	28.O.4310	Screw, adjusting	1	—		
	51.O.4310	Rod, control	1	—		EC5/108
1316	25.O.3506	ROD, END, ADJUSTABLE, GROUP	1	—	C	EC5/53
		Spares for:—				
28R/4665592	R. & M. CM3/16"B	Bearing, rod end	1	—	C	
1320	18.O.3506	ROD, CONTROL, BOTTOM, BETWEEN FORMER 316 AND REAR PRESSURE BULKHEAD, GROUP	2	—	B	EC5/109
		Spares for:—				
1316	25.O.3506	ROD, END, ADJUSTABLE, GROUP	1	—	C	EC5/53
		Spares for:—				
28R/4665592	R. & M. CM3/16"B	Bearing, rod end	1	—	C	
		ATTACHMENTS—CONTROL RODS, PART Nos. 16 & 18.O.3506, 12 & 13.O.3651 and 183.O.3948				
9606	71.O.3506	Bolt, csk. hd., 2 BA	4	S94, 95 or 96	C	
7557	72.O.3506	Bolt, 2 BA	16	—	C	
28M/5808573	A27/CS	Nut, slotted, 2 BA	20	—	C	
28P/9527619	SP90/C7	Pin, split, 1/16" dia.	20	—	C	
28W/9419402	SP13/C	Washer, 2 BA	12	—	C	
28W/9419404	SP16/C	Washer, 2 BA	8	—	C	
22184	75.O.3948	Seal, at rear pressure bulkhead	2	DTD5509	C	EC5/110
22185	76.O.3948	Seal, at rear pressure bulkhead	2	DTD5509	C	EC5/111
	88.O.3948	Seal, at rear pressure bulkhead, port	1	BS1154/213		EC5/112
22186	112D9640	Seal, at rear pressure bulkhead, starboard	1	BS1154/213	C	

ENGINE, IN CREW'S NACELLE, FUSELAGE

Ref. No.	Part No.	Description 1 2 3 4	No. off	Matl. Spec.	Cl. of St. M.R.	Plate and Illust'n No.
12945	1.O.3661	SHAFT, TORQUE, PORT, GROUP	1	—	A	
	2.O.3661	SHAFT, TORQUE, STARBOARD, GROUP	1	—		
		Spares for:—				
	9.O.3661	SHAFT, TORQUE, PORT, GROUP	1	—	MR	EC4/113
	10.O.3661	SHAFT, TORQUE, STBD., GROUP	1	—	MR	EC4/114
		Consisting of:—				
	6.O.3661	BEARING, PEDESTAL, GROUP	1	—	MR	EC4/115
	14.O.3515	BEARING, PEDESTAL, GROUP	1	—		EC4/116
		Spares for:—				
2A/9500419	R. & M. CA1-1/16"	Bearing	1	—	C	
17946	12SS5880	Washer, sealing	1	—	C	
	9.O.3515	Lever, top	1	DTD683 or 364B	MR	EC4/117
	10.O.3515	Lever, bottom	1	DTD683 or 364B	MR	EC4/118
	3.O.3661	SHAFT, OUTER, PORT , GROUP	1	—		EC4/119
	4.O.3661	SHAFT, OUTER, STBD., GROUP	1	—		
		Consisting of:—				
	5.O.3661	BEARING, PEDESTAL, GROUP	1	—	MR	EC4/120
	13.O.3515	BEARING, PEDESTAL, GROUP	1	—	MR	EC4/121
		Spares for:—				
2A/9500422	R. & M. CA1-9/16"	Bearing	1	—	C	
	15SS5880	Plate, securing	1	—		
	5.O.3515	Lever, inner, top	1	DTD683 or 364B	MR	EC4/122
	6.O.3515	Lever, inner, bottom	1	DTD683 or 364B	MR	EC4/123
	8.O.3661	Tube, 1-1/2" o/d x 20G x 5-1/8"	1	T45	MR	
	7.O.3661	Tube, 1" o/d x 20G x 8-5/8"	1	T45	MR	
		ATTACHMENTS—TORQUE SHAFT, PART Nos. 9 & 10.O.3661				
28D/1011030	A25/2E	Bolt, 1/4" BSF	32	—	C	EC4/124
28M/9480017	AGS2001/E1/66	Nut, stiff, 1/4" BSF	32	—	C	
28W/9418920	SP10E	Washer, 1/4"	32	—	C	

CONTROLS

ENGINE, IN CREW'S NACELLE, FUSELAGE

Ref. No.	Part No.	1 2 3 4	Description	No. off	Matl. Spec.	Cl. of St. / M.R.	Plate and Illust'n No.

CONTROLS

ENGINE, IN CREW'S NACELLE

SUMMARY OF STANDARD ITEMS

Stores Ref.		No. off	Stores Ref.		No. off	Stores Ref.		No. off
Section	Ref. No.		Section	Ref. No.		Section	Ref. No.	
28D	1008149	2	28N	2001541	4	28W	9128924	2
28D	1010029	8				28W	9418920	32
28D	1011033	32				28W	9418921	4
28D	1212213	2	28P	833	60	28W	9419401	2
28D	1212221	2	28P	9429619	60	28W	9419402	68
28D	1220032	2	28P	9527619	24	28W	9419404	8
28D	7002428	4				28W	9419454	126
28D	9133011	6				28W	9419465	10
28D	9436920	118	28R	13504	24	28W	9419475	12
28D	9453976	6						
			28S	9446545	24			
28M	13935	4						
28M	1278189	12						
28M	1278190	134						
28M	5808573	20						
28M	9480017	32						

PLATE No. EC 1
ISSUE 1.

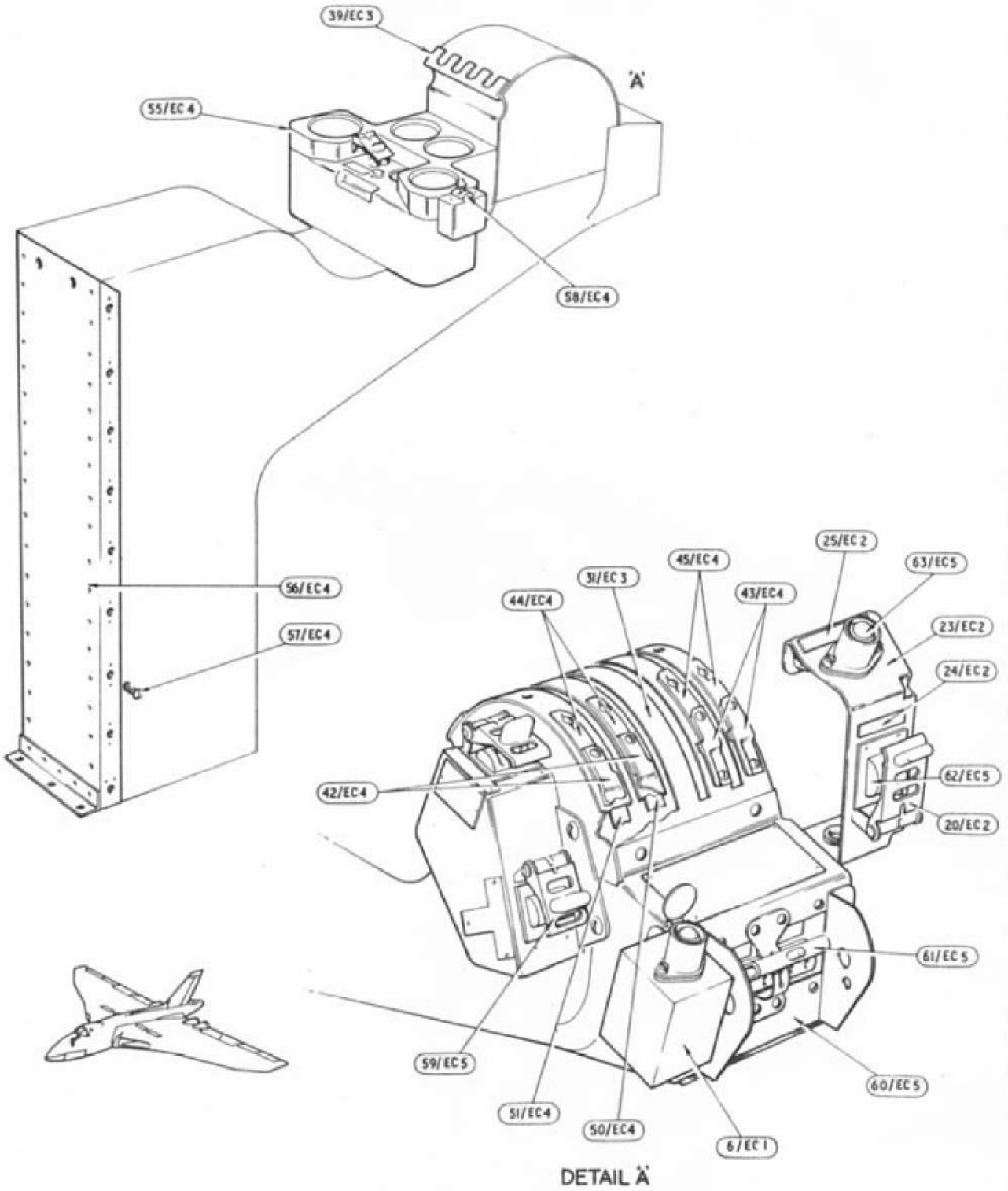

DETAIL 'A'

CONTROLS

ENGINE, IN CREW'S NACELLE, FUSELAGE

PLATE No. EC 2
ISSUE 1.

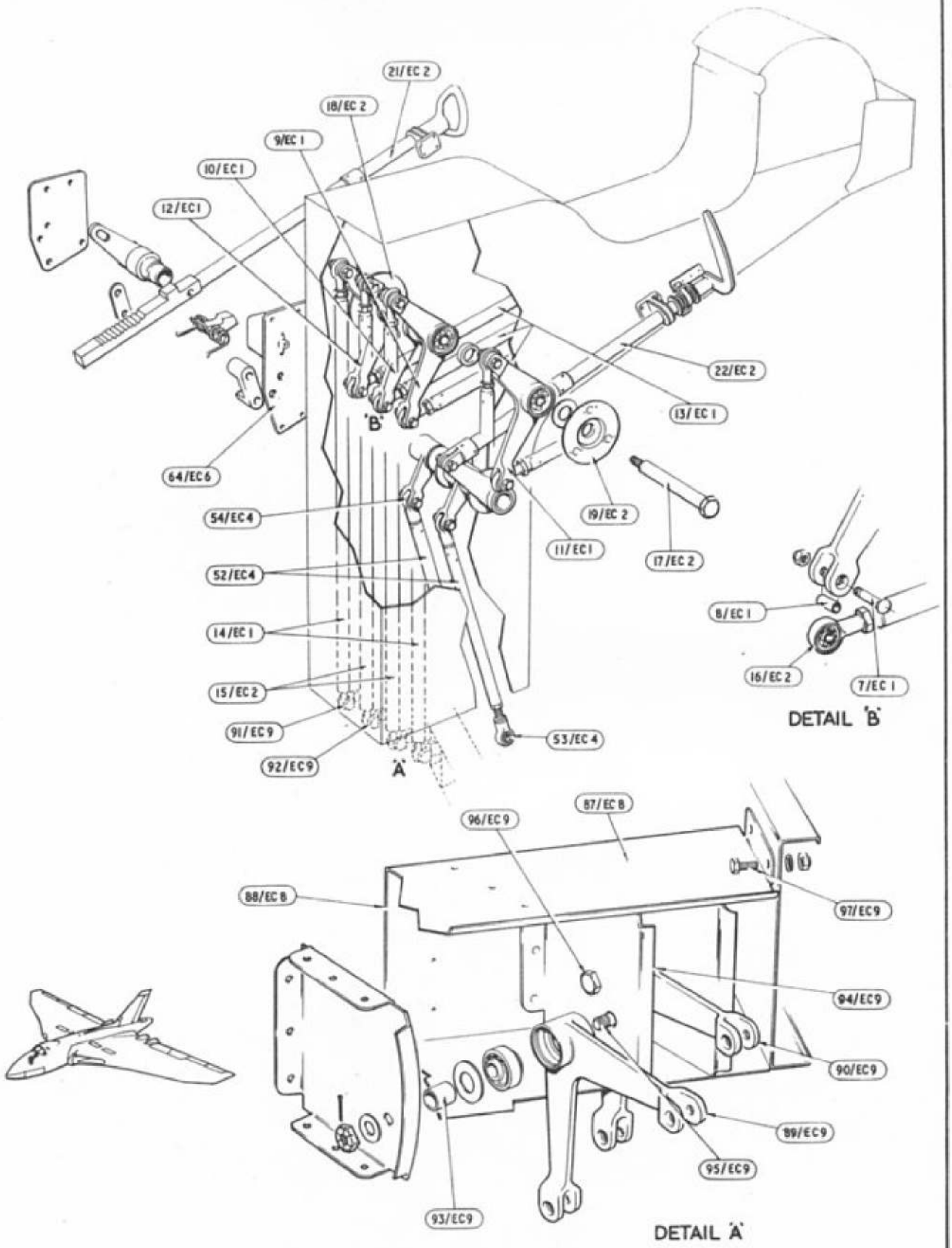

CONTROLS
ENGINE, IN CREW'S NACELLE, FUSELAGE

PLATE No. EC 3
ISSUE 1.

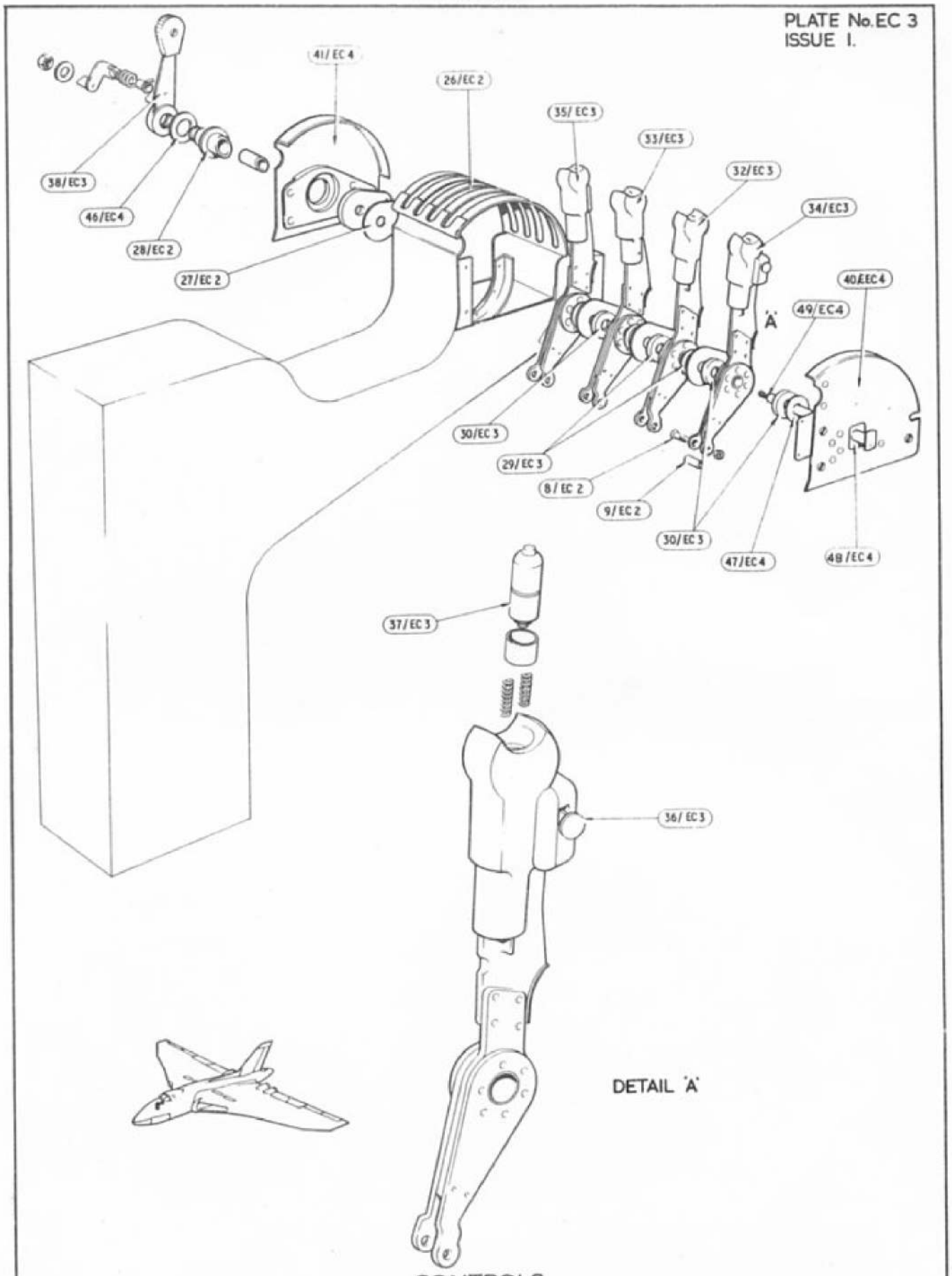

CONTROLS

ENGINE, IN CREW'S NACELLE, FUSELAGE

PLATE No EC 4
ISSUE 1

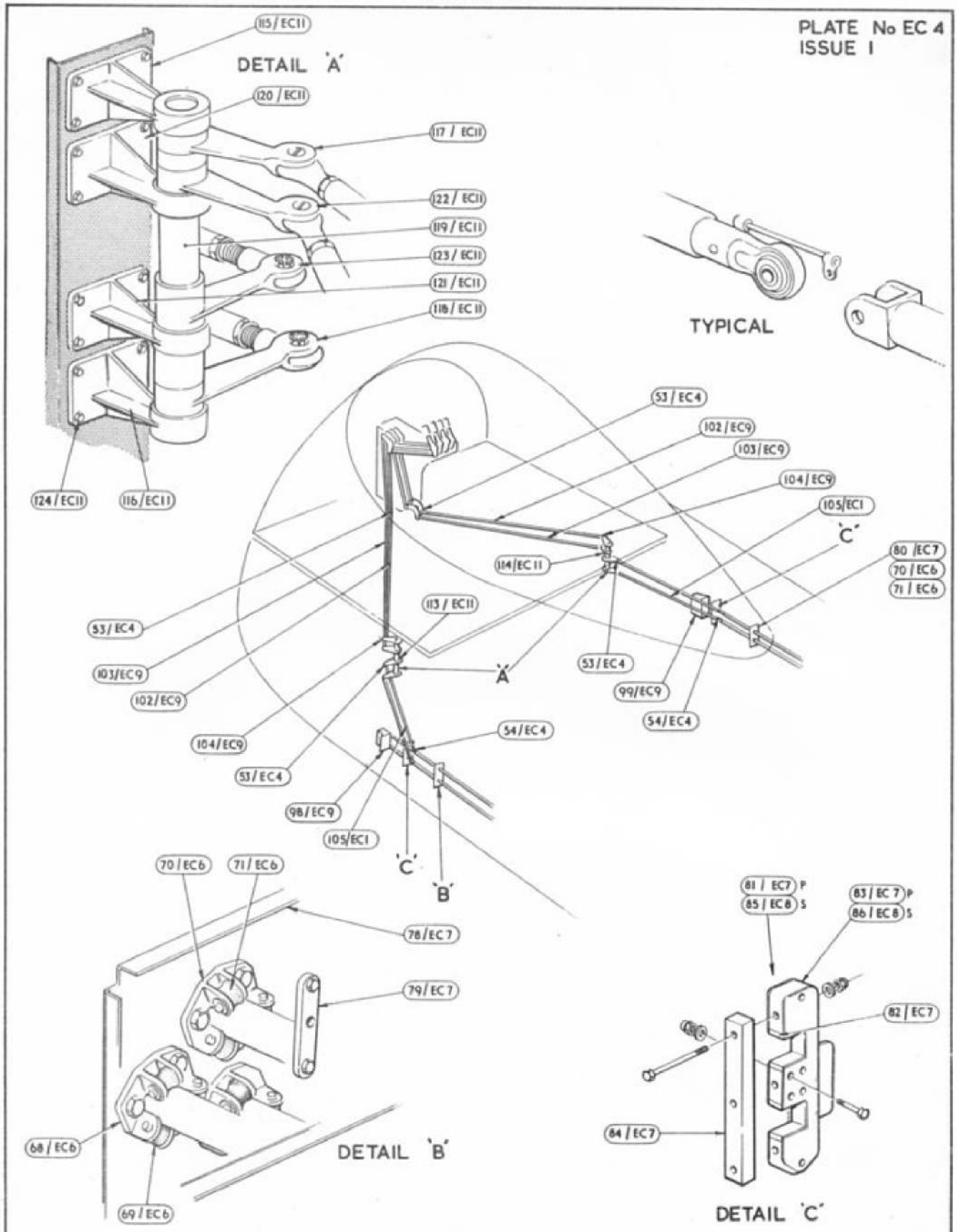

CONTROLS
ENGINE, IN CREW'S NACELLE, FUSELAGE

PLATE No EC 5
ISSUE 1

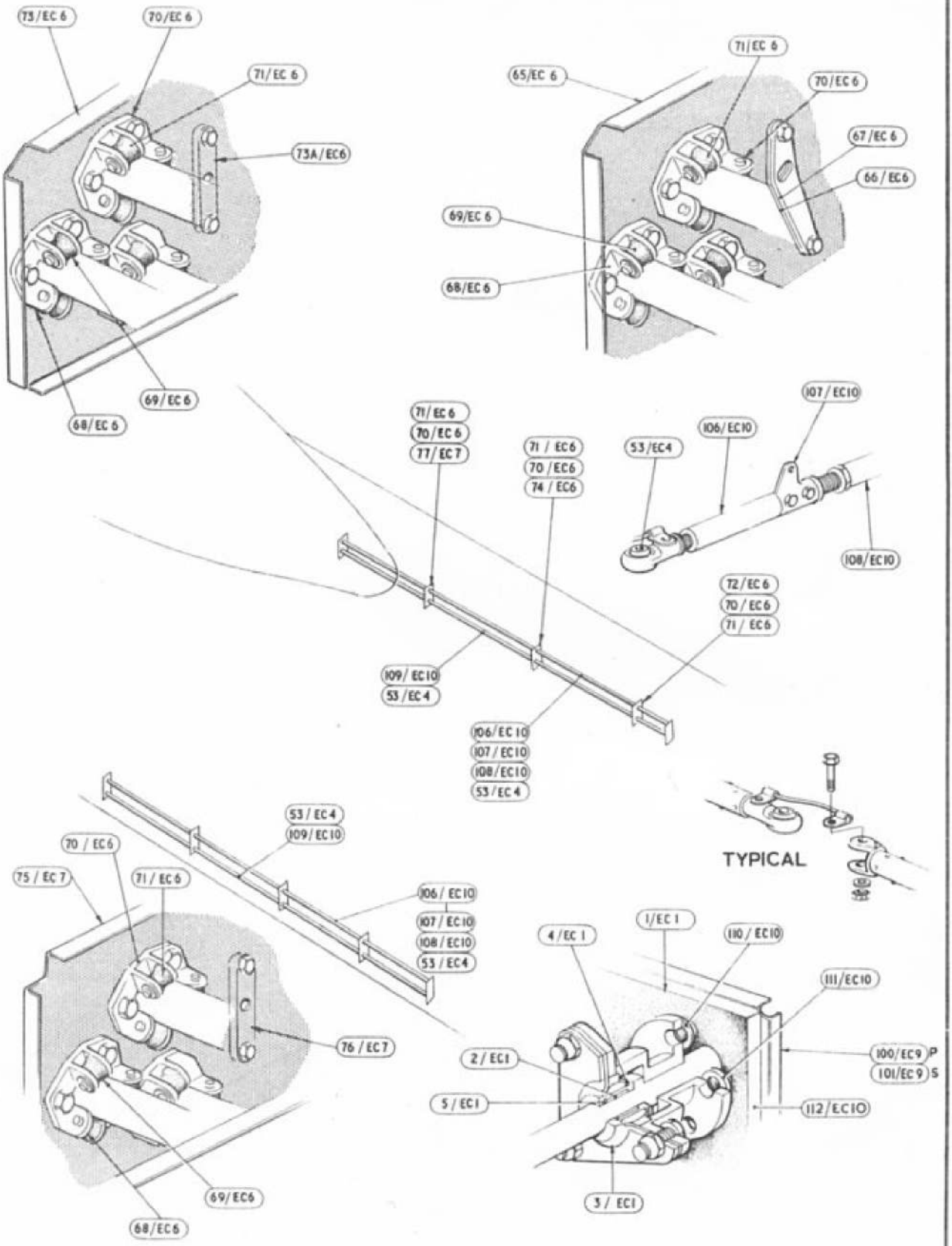

CONTROLS
ENGINE IN CREW'S NACELLE FUSELAGE

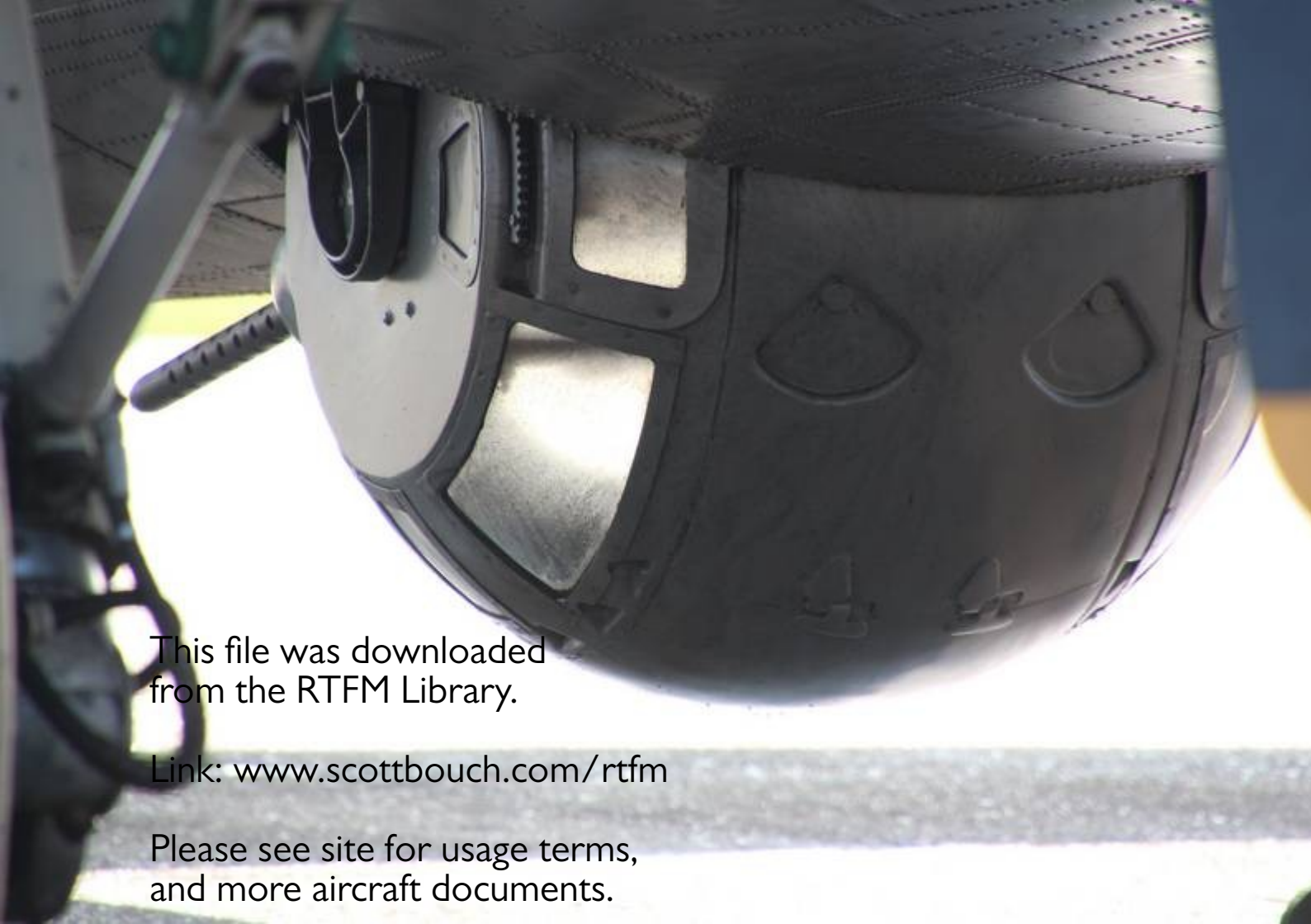

This file was downloaded
from the RTFM Library.

Link: www.scottbouch.com/rtfm

Please see site for usage terms,
and more aircraft documents.