ENGINE, FORWARD OF FRONT SPAR, CENTRE PORTION FUSELAGE

Ref. No.	Part No.	Description 1 2 3 4	No. off	Matl. Spec.	Cl. of St. M.R.	Plate and Illust'n No.
		CONTROLS, ASSEMBLIES, ENGINE FORWARD OF FRONT SPAR, IN CENTRE PORT FUSELAGE, PORT AND STARBOARD (3 & 4.O.3948) (Mod. 889)				
		Spares for:–				
	5.O.3651	BRACKET, FOR LEVER, AT FORMER 115.5, PORT, GROUP	1	–	MR	ED1/1
	6.O.3651	BRACKET, FOR LEVER, AT FORMER 115.5, STARBOARD, GROUP	1	–	MR	ED1/2
		ATTACHMENTS–BRACKET, PART No. 5 & 6.O.3651				
28D/9436920	A25/1C	Bolt, 2 BA	12	–	C	
28M/1012015	AGS2001/C1/66	Nut, stiff, 2 BA	12	–	C	
28W/9419402	SP13/C	Washer, 2 BA	12	–	C	
	1.O.4297	FAIRLEAD, AT RIB 63.5, PORT, GROUP	4	–		ED1/3
	2.O.4297	FAIRLEAD, AT RIB 63.5, STARBOARD, GROUP	4	–		ED1/4
		Spares for:–				
	77.O.3948	FAIRLEAD, ROLLER, GROUP	2	–	MR	ED1/5
		Spares for:–				
	77a.O.3948	ROLLER, GROUP	3	–	MR	
	86.O.3948	FAIRLEAD, AT DIAPHRAGM, 93.75, PORT AND STARBOARD, GROUP	1	–		ED1/6
		Spares for:–				
	77.O.3948	FAIRLEAD, ROLLER, GROUP	2	–	MR	ED1/5
		Spares for:–				
	77a.O.3948	ROLLER, GROUP	3	–	MR	
12967	35a.O.3506	Plate, tapered	1	DTD130	C	
	77.O.3948	FAIRLEAD, ROLLER, AT FORMERS 189.5, 160-5 AND 145.25, PORT AND STARBOARD, GROUP	6	–	MR	ED1/7
		Spares for:–				
	77a.O.3948	ROLLER, GROUP	3	–	MR	
		ATTACHMENTS–ROLLER, PART No. 77a.O.3948				
28P/7132521	SP/4/Y/B7	Pin	96	–	C	
28P/9710567	SP90/C4	Pin, split, 1/16" dia. (SP9/C5)	96	–	C	
28W/1009699	SP10/C	Washer, 2 BA	96	–	C	
		ATTACHMENTS–FAIRLEAD, PART No. 77.O.3948				
28D/1214091	AS1242/2C	Bolt, csk hd., 2 BA	12	–	C	
28D/9436920	A25/1C	Bolt, 2 BA	84	–	C	
28M/1012015	AGS2001/C1/66	Nut, stiff, 2BA	48	–	C	
28W/9419402	SP13/C	Washer, 2 BA	96	–	C	
		ATTACHMENTS–FAIRLEAD, PART No. 86.O.3948				
28D/9436920	A25/1C	Bolt, 2 BA	8	–	C	
28W/9419402	SP13/C	Washer, 2 BA	8	–	C	

CONTROLS

ENGINE, FORWARD OF FRONT SPAR, CENTRE PORTION FUSELAGE

Ref. No.	Part No.	Description 1 2 3 4	No. off	Matl. Spec.	Cl. of St. M.R.	Plate and Illust'n No.
	26.O.3651	LEVER AND BRACKET, LOWER AT FORMER 115.5, PORT, GROUP	1	—	MR	ED1/8
		Spares for:—				
	20.O.3651	Bolt, lever attachment	1	S94, 95 or 96	MR	
	11.O.3506	BRACKET, GROUP	1	—		
	61.O.3506	LEVER, R.H., GROUP	1	—	MR	ED1/9
12962	64.O.3506	LEVER, L.H., GROUP	1	—	B	ED1/10
		Spares for:—				
2A/9500413	R. & M. CK3/8"C	Bearing	2	—	C	
12959	61a.O.3506	Lever, R.H.	1	DTD683 or 364B	C	
	64a.O.3506	Lever, L.H.	1	DTD683 or 364B		
17942	2SS5880	Plate, securing	1	—	C	
	AS.2806/7/05	Tube, distance	1	—		
	27.O.3651	LEVER AND BRACKET, LOWER AT FORMER 115.5, STARBOARD, GROUP	1	—	MR	ED1/11
		Spares for:—				
	20.O.3651	Bolt, lever attachment	1	S94, 95 or 96	MR	
	11.O.3506	BRACKET, GROUP	1	—		
	63.O.3506	LEVER, L.H., GROUP	1	—	MR	ED1/12
12960	62.O.3506	LEVER, R.H., GROUP	1	—	B	ED1/13
		Spares for:—				
2A/9500413	R. & M. CK3/8"C	Bearing	2	—	C	
17942	2SS5880	Plate, securing	1	—	C	
		ATTACHMENTS—LEVER & BRACKET, PART Nos. 26 & 27.O.3651				
28D/9436920	A25/1C	Bolt, 2 BA	4	—	C	
28D/1011024	A25/21C	Bolt, 2 BA	6	—	C	
28D/1212305	A25/21E	Bolt, 1/4" BSF	2	—	C	
28M/1012015	AGS2001/C1/66	Nut, stiff, 2 BA	10	—	C	
28M/9480017	AGS2001/E1/66	Nut, stiff, 1/4" BSF	2	—	C	
28W/9419402	SP13/C	Washer, 2 BA	10	—	C	
28W/9418921	SP13/E	Washer, 1/4"	2	—	C	
	65.O.3506	LEVER, UPPER, AT FORMER 115.5 L.H., PORT, GROUP	1	—	MR	ED1/14
	68.O.3506	LEVER, UPPER, AT FORMER 115.5 R.H., PORT, GROUP	1	—	MR	ED1/15
	66.O.3506	LEVER, UPPER, AT FORMER 115.5 L.H., STARBOARD, GROUP	1	—	MR	ED1/16
12965	67.O.3506	LEVER, UPPER, AT FORMER 115.5 R.H., STARBOARD, GROUP	1	—	B	ED1/17
		Spares for:—				
2A/9500413	R. & M. CK3/8"C	Bearing	2	—	C	
17942	2SS5880	Plate, securing	1	—	C	

ENGINE, FORWARD OF FRONT SPAR, CENTRE PORTION FUSELAGE

Ref. No.	Part No.	Description 1 2 3 4	No. off	Matl. Spec.	Cl. of St. M.R.	Plate and Illust'n No.
		ATTACHMENTS–LEVER, PART Nos. 65, 66, 67 & 68 O.3506				
28D/1212168	A57/34J	Bolt, 3/8" BSF	2	–	C	
28M/4199616	A58/JS	Nut, slotted, 3/8" BSF	2	–	C	
28P/9527619	SP90/C7	Pin, split, 1/16" dia.	2	–	C	
28W/9419466	SP13/J	WASHER, 3/8"	2	–	C	
22325	1.O.3965	ROD, CONTROL, TOP AND BOTTOM FROM REAR PRESSURE BULKHEAD TO JOINT, BETWEEN FORMERS 145.25 AND 130 PORT AND STARBOARD, GROUP	2	–	B	ED1/18
		Spares for:–				
	3.O.3965	Fork-end, adjustable	1	–		
	25.O.3506	ROD-END, ADJUSTABLE, GROUP	1	–	MR	
		Spares for:–				
28R/4665592	R. & M. CM.3/16"B	Bearing, rod-end	1	–	C	
1322	21.O.3506	ROD, CONTROL, TOP, FROM JOINT BETWEEN FORMERS 130 & 145.25 TO LEVERS AT 115.5 PORT AND STARBOARD, GROUP	1	–	B	ED1/19
1323	22.O.3506	ROD, CONTROL, BOTTOM, FROM JOINT BETWEEN FORMERS 130 AND 145.25, TO LEVERS AT 115.5 PORT AND STARBOARD, GROUP	1	–	B	ED1/20
		Spares for:–				
	44.O.3506	ROD-END, FIXED, GROUP	1	–	MR	
		Spares for:–				
28R/4665592	R. & M. CM.3/16"B	Bearing, rod-end	1	–	C	
1324	9.O.3651	ROD, CONTROL, LEVER TO LEVER, BETWEEN FORMERS 115.5 & 130, PORT AND STARBOARD, GROUP	2	–	B	ED1/21
		Spares for:–				
	25.O.3506	ROD END, ADJUSTABLE, GROUP	1	–	MR	
		Spares for:–				
28R/4665592	R. & M. CM.3/16"B	Bearing, rod end	1	–	C	
	44.O.3506	ROD-END, FIXED, GROUP	1	–	MR	
		Spares for:–				
28R/4665592	R. & M. CM.3/16"B	Bearing, rod-end	1	–	C	
	59.O.3506	ROD, CONTROL, TOP, FROM LEVER AT FORMER 115.5, TO JOINT AFT OF FORMER 101, PORT AND STARBOARD, GROUP	1	–	MR	ED1/22

CONTROLS

ENGINE, FORWARD OF FRONT SPAR, CENTRE PORTION FUSELAGE

Ref. No.	Part No.	Description 1 2 3 4	No. off	Matl. Spec.	Cl. of St. M.R.	Plate and Illust'n No.
	60.O.3506	ROD, CONTROL, BOTTOM, FROM LEVER AT FORMER 115.5 TO JOINT AFT OF FORMER 101, PORT AND STARBOARD, GROUP	1	–	MR	ED1/23
		Spares for:–				
	44.O.3506	ROD-END, FIXED, GROUP	1	–	MR	
		Spares for:–				
28R/4665592	R. & M. CM.3/16"B	Bearing, rod-end	1	–	C	
1327	20.O.3506	ROD, CONTROL, TOP AND BOTTOM, FROM FORMER 101 TO JOINT AFT OF FRONT SPAR, PORT AND STARBOARD, GROUP	2	–	B	ED1/24
		Spares for:–				
	25.O.3506	ROD-END, ADJUSTABLE, GROUP	1	–	MR	
		Spares for:–				
28R/4665592	R. & M. CM.3/16"B	Bearing, rod-end	1	–	C	
		ATTACHMENTS–CONTROL RODS, PART Nos. 20, 21, 22, 59 & 60.O.3506, 9.O.3651 and 1.O.3965				
	71.O.3506	Bolt, csk. hd., 2 BA, rod to lever	16	S94, 95 or 96	MR	ED1/25
	72.O.3506	Bolt, 2 BA, rod joint	12	–	MR	ED1/26
28M/5808573	A27/CS	Nut, slotted, 2 BA	28	–	C	
28P/9527619	SP90/C7	Pin, split, 1/16" dia.	28	–	C	
28W/9419402	SP13/C	Washer, 2 BA	16	–	C	
28W/9419404	SP16/C	Washer, 2 BA	12	–	C	

CONTROLS

ENGINE, FORWARD OF FRONT SPAR, CENTRE PORTION FUSELAGE

SUMMARY OF STANDARD ITEMS

Stores Ref.		No. off	Stores Ref.		No. off	Stores Ref.		No. off
Section	Ref. No.		Section	Ref. No.		Section	Ref. No.	
28D	12571	2	28P	833	96	28W	1009699	96
28D	1011024	6	28P	9527619	30	28W	9418921	2
28D	1212168	2	28P	9710567	96	28W	9419402	142
28D	1214091	12				28W	9419404	12
28D	9436920	108				28W	9419466	2
			28R	13504	12			
28M	14833	2						
28M	1278190	70						
28M	5808573	28						
28M	9480017	2						

PLATE No ED1
ISSUE 1

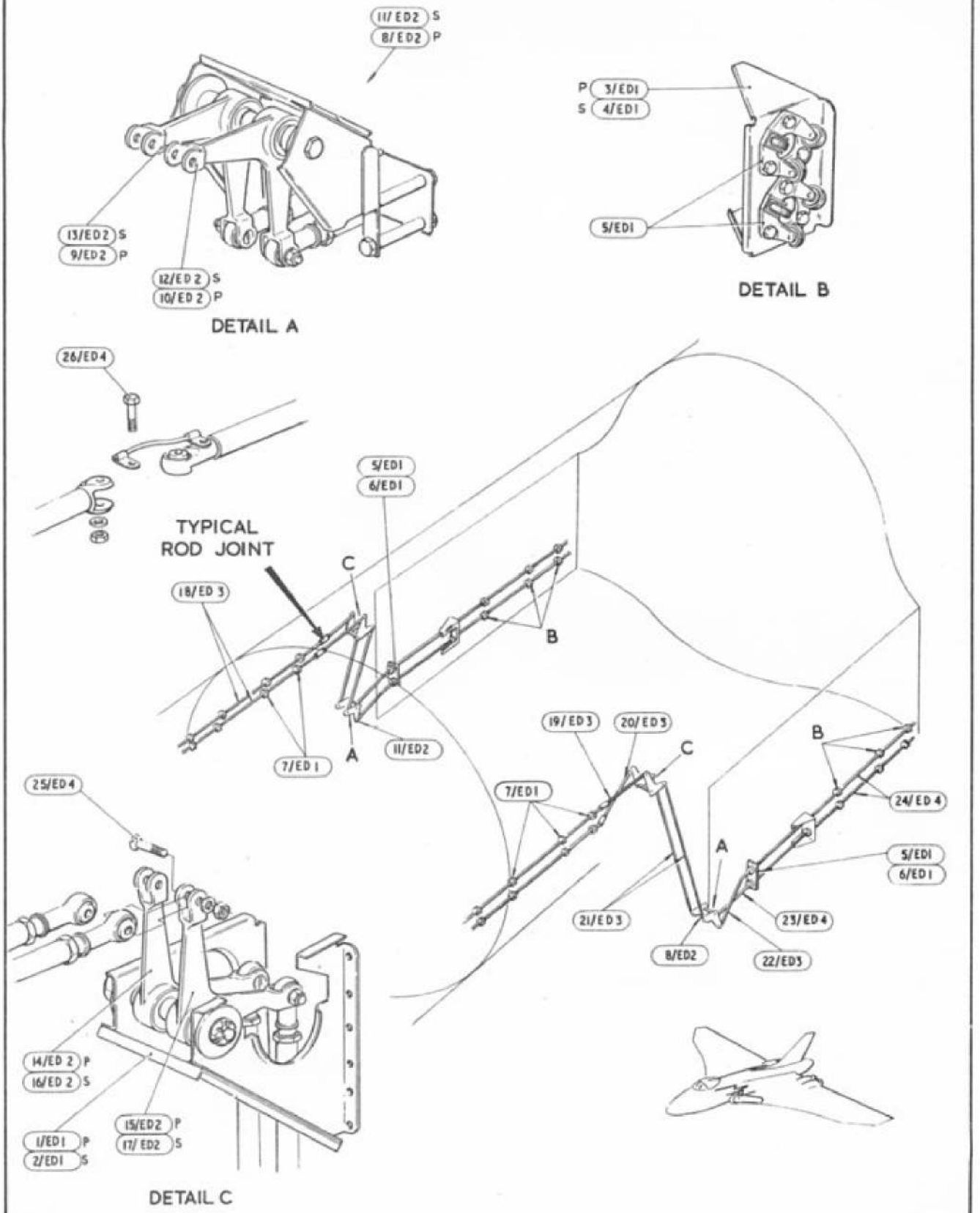

CONTROLS

ENGINE, FORWARD OF FRONT SPAR, CENTRE PORTION FUSELAGE

This file was downloaded
from the RTFM Library.

Link: www.scottbouch.com/rtfm

Please see site for usage terms,
and more aircraft documents.