ENGINE, AFT OF FRONT SPAR, IN CENTRE PORTION FUSELAGE

Ref. No.	Part No.	Description 1 2 3 4	No. off	Matl. Spec.	Cl. of St. / M.R.	Plate and Illust'n No.
		CONTROLS, ENGINE, AFT OF FRONT SPAR, IN CENTRE PORTION FUSELAGE, PORT AND STARBOARD (3 & 4.O.3948) (Mods. 120 & 1544)				
		Spares for:–				
	HONEYWELL MDH3211Q/N1	Actuator, port and starboard	4	–		EE1/1
	101.O.3948	Bracket, limit switch mounting, port and starboard	1	–		EE1/2
	102.O.3948	Bracket, limit switch mounting, port	1	–		EE2/3
	103.O.3948	Bracket, limit switch mounting, starboard	1	–		EE1/4
		ATTACHMENTS–BRACKET, PART Nos. 101, 102 & 103.O.3948				
28D/9133012	A25/3C	Bolt, 2 BA	12	–	C	
28W/9419402	SP13/C	Washer, 2 BA	12	–	C	
	HONEYWELL 5PA/3	Cover, terminal, port and starboard (Mod. 1856)	4	–		EE1/5
		ATTACHMENTS–COVER, PART No. 5PA/3				
28DU/9480231	A116/8B	Bolt, pan hd., No. 6 UNC 2A	16	–	C	
28W/9157971	SP126/B	Washer, No. 6	16	–	C	
	23.O.3518	FAIRLEAD, BRACKET, AT RIB 63.5, PORT, GROUP	1	–		EE2/6
	24.O.3518	FAIRLEAD, BRACKET, AT RIB 63.5, STARBOARD, GROUP	2	–		EE1/7
		Spares for:–				
	77.O.3948	FAIRLEAD, ROLLER, GROUP	2	–	MR	
		Spares for:–				
	77a.O.3948	ROLLER, GROUP	3	–	MR	
	42.O.3948	FAIRLEAD, BRACKET, AT BULKHEAD 63.19, STARBOARD, GROUP	1	–		EE1/8
		Spares for:–				
	77.O.3948	FAIRLEAD, ROLLER, GROUP	1	–	MR	
		Spares for:–				
	77a.O.3948	ROLLER, GROUP	3	–	MR	
		ATTACHMENTS–ROLLER, PART No. 77a.O.3948				
28P/7132521	SP/4/Y/B7	Pin	21	–	C	
28P/9710567	SP90/C4	Pin, split, 1/16" dia. (SP9/C5)	27	–	C	
28W/9419454	SP10/C	Washer, 2 BA	27	–	C	
		ATTACHMENTS–FAIRLEAD, PART No. 77.O.3948				
28D/9436920	A25/1C	Bolt, 2 BA	27	–	C	
28M/1012015	AGS2001/C1/66	Nut, stiff, 2 BA	27	–	C	
28W/9419402	SP13/C	Washer, 2 BA	27	–	C	

CONTROLS

ENGINE, AFT OF FRONT SPAR, IN CENTRE PORTION FUSELAGE

Ref. No.	Part No.	Description 1 2 3 4	No. off	Matl. Spec.	Cl. of St. / M.R.	Plate and Illust'n No.
		LEVER, FOR CONTROL RODS ON RIB 63.5 AND FRONT ENGINE BULKHEAD 63.19, PORT AND STARBOARD (1 & 2.O.3949)		–		EE1/9
		Spares for:–				
1433802	3.O.3652	BRACKET, TOP, PORT, GROUP	1	–	C	
	4.O.3652	BRACKET, TOP, STBD., GROUP	1	–	MR	
	5.O.3652	BRACKET, CENTRE, PORT, GROUP	1	–	MR	
	6.O.3652	BRACKET, CENTRE, STBD., GROUP	1	–	MR	
	7.O.3652	BRACKET, BOTTOM, PORT, GROUP	1	–	MR	
	8.O.3652	BRACKET, BOTTOM, STBD., GROUP	1	–	MR	
		ATTACHMENTS–BRACKET, PART Nos. 3, 4, 5, 6, 7 & 8.O.3652				
28D/9436920	A25/1C	Bolt, 2 BA	42	–	C	
28M/1012015	AGS2001/C1/66	Nut, stiff, 2 BA	42	–	C	
28W/9419402	SP13/C	Washer, 2 BA	42	–	C	
1433801	3.O.3949	LEVER, CONTROL, C/W BEARING, PORT, GROUP	2	–	C	
1433195	4.O.3949	LEVER, CONTROL, BOTTOM, C/W BEARING, STARBOARD, GROUP	1	–	C	
1510569	5.O.3949	LEVER, CONTROL, TOP, C/W BEARING, STARBOARD, GROUP	1	–	C	
		Spares for:–				
2A/9500413	R. & M. CK.3/8"C	Bearing	2	–	C	
		ATTACHMENTS–LEVER, PART Nos. 3, 4 & 5.O.3949				
28D/1214459	AS2504/38J	Bolt, 3 /8" BSF	2	–	C	
28M/4199616	A58/JS	Nut, slotted, 3/8" BSF	2	–	C	
28P/9527619	SP90/C7	Pin, split, 1/16" dia.	2	–	C	
28W/9419466	SP13/J	Washer, 3/8"	2	–	C	
12651	70.O.3948	LEVER, AT RIB 113.3, INBOARD ENGINE BAY, PORT AND STARBOARD, GROUP	1	–	B	EE1/10
		Spares for:–				
2A/9500412	SKEFCO CBS.3	Bearing	2	–	C	
	7F8532	Bush	2	S1		EE1/11
	71.O.3948	Bush	4	S1		EE1/12
28N/2001688	AGS2030/22	Circlip	1	–	C	
	2F.8733	LEVER, GROUP				
		ATTACHMENTS–LEVER, PART No. 70.O.3948				
28D/9434880	A59/13G	Bolt, 5/16" BSF	2	–	C	
28M/4095895	A24/GS	Nut, slotted, 5/16" BSF	2	–	C	
28P/9527619	SP90/C7	Pin, split, 1/16" dia.	2	–	C	
28W/9419403	SP13/G	Washer, 5/16"	2	–	C	
28W/9419488	SP16/G	Washer, 5/16"	2	–	C	

ENGINE, AFT OF FRONT SPAR, IN CENTRE PORTION FUSELAGE

Ref. No.	Part No.	Description 1 2 3 4	No. off	Matl. Spec.	Cl. of St. / M.R.	Plate and Illust'n No.
	128.O.3948	LEVER, INTERMEDIATE, AFT FRONT ENGINE BULKHEAD, OUTBOARD ENGINE BAY, STARBOARD, GROUP	1	–		EE1/13
		Spares for:–				
	61.O.3948	BOX, BEARING, GROUP	1	–	MR	
		Spares for:–				
2A/9501177	R. & M. KLNJ.1/2"	Bearing	2	–	C	
	23.O.3948	Housing, bearing	2	DTD130		
	25.O.3948	Tube, distance	1	DTD133		
	107.O.3948	Lever	1	DTD130		
28M/4095917	A24/JS	Nut, slotted, 3/8" BSF	1	–	C	
28P/9527619	SP90/C7	Pin, split, 1/16" dia.	1	–	C	
	20.O.3948	Spindle	1	S96	MR	
7787	24.O.3948	Washer, cup	1	S1	C	
		ATTACHMENTS–LEVER PART No. 128.O.3948				
28D/9133011	A25/2C	Bolt, 2 BA	4	–	C	
28W/9419402	SP13/C	Washer, 2 BA	4	–	C	
		MOUNTING, SERVO MOTORS, AFT FRONT ENGINE BULKHEAD, INBOARD AND OUTBOARD ENGINE BAYS, PORT AND STBD. (1 & 2.O.4143 AND 1 & 2.O.4142)				EE1/14
		Spares for:–				
5K/7000230	AS3360/B3B	Lead, bonding	1	–	C	
		ATTACHMENTS–BONDING LEAD PART No. AS.3360/B3B				
28D/1010658	A25/1B	Bolt, 4 BA	4	–	C	
28M/1278189	AGS2001/B/1	Nut, stiff, 4 BA	4	–	C	
28W/9419465	SP13/B	Washer, 4 BA	4	–	C	
	120.O.3948	Lever, port (Pre-Mod. 2263)	1	–	MR	
	119.O.3948	Lever, starboard (Pre-Mod. 2263)	1	–	MR	
		ATTACHMENTS–LEVER, PART Nos. 119 & 120.O.3948				
28D/1010030	A25/7C	Bolt, 2 BA	4	–	C	
28M/5808573	A27/CS	Nut, slotted, 2 BA	4	–	C	
28P/9710567	SP90/C4	Pin, split, 1/16" dia. (SP9/C5)	4	–	C	
28W/9419402	SP13/C	Washer, 2 BA	4	–	C	
6TB/1692	–	Motor, servo, type "B" (Pre-Mod. 2263)	1	–	A	
6T/1873	–	Mounting, servo motor (Pre-Mod. 2263)	1	–	A	
		ATTACHMENTS–MOUNTING REF. No. 6T/1873				
28M/1011467	A27/ES	Nut, slotted, 1/4" BSF	24	–	C	
28P/9527619	SP90/C7	Pin, split, 1/16" dia.	24	–	C	
	143.O.3948	Stud (Pre-Mod. 2263)	8	–	MR	
	144.O.3948	Stud (Pre-Mod. 2263)	4	–	MR	
28W/9428921	SP13/E	Washer, 1/4"	12	–	C	
28W/1007777	AGS2034/E	Washer, shakeproof	12	–	C	

CONTROLS

ENGINE, AFT OF FRONT SPAR, IN CENTRE PORTION FUSELAGE

Ref. No.	Part No.	Description 1 2 3 4	No. off	Matl. Spec.	Cl. of St. M.R.	Plate and Illust'n No.
	22.O.3506	ROD, CONTROL, TOP AND BOTTOM, ... OUTBOARD OF RIB 63.5, FROM JOINT AFT OF FRONT SPAR TO JOINT FORWARD FAIRLEAD BRACKET, PORT AND STARBOARD, GROUP	2	–		EE1/15
		Spares for:–				
	44.O.3506	ROD, END, FIXED, GROUP	1	–	MR	
		Spares for:–				
28R/4665592	R & M CM.3/16"B	Bearing, rod end	1	–	C	
	3.O.3516	ROD, CONTROL, TOP AND BOTTOM, ... OUTBOARD OF RIB 63.5, FROM JOINT FORWARD FAIRLEAD BRACKET, TO JOINT FORWARD FRONT ENGINE BULKHEAD, PORT AND STARBOARD, GROUP	2	–	MR	EE1/16
		Spares for:–				
	25.O.3506	ROD, END, ADJUSTABLE, GROUP	1	–	MR	
		Spares for:–				
28R/4665592	R & M CM3/16"B	Bearing, rod end	1	–	C	
	44.O.3506	ROD, END, FIXED, GROUP	1	–	MR	
		Spares for:–				
28R/4665592	R & M CM3/16"B	Bearing, rod end	1	–	C	
1337	21.O.3518	ROD, CONTROL, TOP AND BOTTOM	2	–	B	EE1/17
		OUTBOARD RIB 63.5, FROM LEVER AFT FRONT ENGINE BULKHEAD TO JOINT FORWARD FRONT ENGINE BULKHEAD, PORT AND STBD., GROUP				
		Spares for:–				
	44.O.3506	ROD, END, FIXED, GROUP	1	–	MR	
		Spares for:–				
28R/4665592	R & M CM3/16"B	Bearing, rod end	1	–	C	
	5.O.3948	ROD, CONTROL, TOP, FROM LEVER RIB ... 63.5 TO CONTROL SPINDLE INBOARD ENGINE BAY, PORT, GROUP	1	–	MR	EE2/18
	6.O.3948	ROD, CONTROL, TOP, FROM LEVER RIB ... 63.5 TO CONTROL SPINDLE INBOARD ENGINE BAY, STARBOARD, GROUP	1	–	MR	EE1/19
		Spares for:–				
	14.O.3948	ROD-END, ADJUSTABLE, GROUP	1	–	MR	
		Spares for:–				
28R/4665593	R & M CM3/16"BL	Bearing, rod end	1	–	C	
	33.O.3518	ROD, END, ADJUSTABLE, GROUP	1	–	MR	
		Spares for:–				
28R/4665592	R & M CM3/16"B	Bearing, rod end	1	–	C	

ENGINE, AFT OF FRONT SPAR, IN CENTRE PORTION FUSELAGE

Ref. No.	Part No.	Description 1 2 3 4	No. off	Matl. Spec.	Cl. of St. M.R.	Plate and Illust'n No.
22324	196.O.3948	ROD, CONTROL, SPINDLE TO INTER-MEDIATE LEVER INBOARD ENGINE BAY, PORT, GROUP (Pre Mod. 2452)	1	—	B	EE2/20
		Spares for:—				
	106a.O.3948	ROD, END, FIXED, GROUP	1	—		
		Spares for:—				
28R/4665592	R & M CM3/16"B	Bearing rod-end	1	—	C	
	25.O.3506	ROD, END, ADJUSTABLE, GROUP	1	—	MR	
		Spares for:—				
28R/4665592	R & M CM3/16"B	Bearing, rod-end	1	—	C	
	125.O.3948	ROD, CONTROL, FROM INTERMEDIATE LEVERS TO SERVO MOTOR, INBOARD ENGINE BAY, PORT, GROUP (Pre Mod. 2263)	1	—		EE2/21
	126.O.3948	ROD, CONTROL, FROM INTERMEDIATE LEVERS TO SERVO MOTOR, INBOARD ENGINE BAY, STARBOARD, GROUP (Pre Mod. 2263)	1	—		EE1/22
		Spares for:—				
	33.O.3518	ROD, END, ADJUSTABLE, GROUP	1	—	MR	
		Spares for:—				
28R/4665592	R & M CM3/16"B	Bearing rod-end	1	—	C	
	14.O.3948	ROD, END, ADJUSTABLE, GROUP	1	—	MR	
		Spares for:—				
28R/4665592	R & M CM3/16"B	Bearing, rod-end	1	—	C	
	171.O.3948	ROD, CONTROL, BOTTOM, FROM JOINT INBOARD ENGINE BAY TO LEVER RIB 113.3 PORT GROUP (Mod. 1544)	1	—	MR	EE2/23
		Spares for:—				
	44.O.3506	ROD, END FIXED, GROUP	1	—	MR	
		Spares for:—				
28R/4665592	R & M CM3/16"B	Bearing, rod-end	1	—	C	
7556	18.O.3948	ROD, CONTROL, BOTTOM, FROM LEVER RIB 63.5 TO JOINT INBOARD ENGINE BAY, STARBOARD, GROUP	1	—	B	EE1/24
		Spares for:—				
	33.O.3518	ROD, END, ADJUSTABLE, GROUP	1	—	MR	
		Spares for:—				
28R/4665592	R & M CM3/16"B	Bearing, rod-end	1	—	C	
8735	63.O.3948	ROD, CONTROL, BOTTOM, FROM JOINT INBOARD ENGINE BAY, TO LEVER RIB 311.3 STARBOARD GROUP	1	—	B	EE1/25
		Spares for:—				
	44.O.3506	ROD, END, FIXED, GROUP	1	—	MR	
		Spares for:—				
28R/4665592	R & M CM3/16"B	Bearing, rod-end	1	—	C	

CONTROLS

ENGINE, AFT OF FRONT SPAR, IN CENTRE PORTION FUSELAGE

Ref. No.	Part No.	Description 1 2 3 4	No. off	Matl. Spec.	Cl.of St. M.R.	Plate and Illust'n No.
	172.O.3948	ROD, CONTROL, FROM LEVER RIB 113.3 ..... TO INTERMEDIATE LEVER OUTBOARD ENGINE BAY, PORT, GROUP	1	—	MR	EE2/26
		Spares for:—				
	33.O.3518	ROD, END, ADJUSTABLE, GROUP	1	—	MR	
		Spares for:—				
28R/4655592	R & M CM3/16"B	Bearing, rod-end	1	—	C	
8734	64.O.3948	ROD, CONTROL, FROM LEVER RIB 113.3 ..... TO CONTROL SPINDLE OUTBOARD ENGINE BAY, STARBOARD, GROUP	1	—	B	EE1/27
		Spares for:—				
	33.O.3518	ROD, END, ADJUSTABLE, GROUP	1	—	MR	
		Spares for:—				
28R/4665592	R & M CM3/16"B	Bearing, rod-end	1	—	C	
22323	123.O.3948	ROD, CONTROL, FROM INTERMEDIATE ..... LEVERS TO CONTROL SPINDLES OUTB'D ENGINE BAY, PORT, GROUP	1	—	B	EE2/28
		Spares for:—				
	33.O.3518	ROD, END, ADJUSTABLE, GROUP	1	—	MR	
		Spares for:—				
28R/4665592	R & M CM3/16"B	Bearing, rod-end	1	—	C	
	14.O.3948	ROD, END, ADJUSTABLE, GROUP	1	—	MR	
		Spares for:—				
28R/4665593	R & M CM3/16'BL	Bearing, rod-end	1	—	C	
22324	106.O.3948	ROD, CONTROL, FROM CONTROL SPINDLE, . TO INTERMEDIATE LEVERS, OUTB'D ENGINE BAY, STARBOARD, GROUP (Pre Mod. 2452)	1	—	B	EE1/20
		Spares for:—				
	106a.O.3948	ROD, END, FIXED, GROUP	1	—		
		Spares for:—				
28R/4665592	R & M CM3/16"B	Bearing, rod-end	1	—	C	
	25.O.3506	ROD, END, ADJUSTABLE, GROUP ..... (Pre Mod. 2452)	1	—	MR	
		Spares for:—				
28R/4665592	R & M CM3/16"B	Bearing, rod-end	1	—	C	
	124.O.3948	ROD, CONTROL, FROM CONTROL SPINDLE .. TO SERVO MOTOR OUTB'D ENGINE BAY PORT, GROUP (Pre Mod. 2263)	1	—	MR	EE2/29

ENGINE, AFT OF FRONT SPAR, IN CENTRE PORTION FUSELAGE

Ref. No.	Part No.	Description 1 2 3 4	No. off	Matl. Spec.	Cl. of St. M.R.	Plate and Illust'n No.
	127.O.3948	ROD, CONTROL, FROM INTERMEDIATE LEVERS TO SERVO MOTOR, OUTBD ENGINE BAY, STARBOARD, GROUP (Pre-Mod. 2263)	1	—	MR	EE1/30
		Spares for:—				
	33.O.3518	ROD, END, ADJUSTABLE, GROUP	1	—	MR	
		Spares for:—				
28R/4665592	R & M CM3/16"B	Bearing, rod-end	1	—	C	
	14.O.3948	ROD, END, ADJUSTABLE, GROUP	1	—	MR	
		Spares for:—				
28R/4665593	R & M CM3/16"BL	Bearing, rod-end	1	—	C	
		ATTACHMENTS—CONTROL RODS, PART Nos. 5, 6, 18, 63, 64, 106, 123, 124, 125, 126, 127, 171 & 172.O.3948, 21.O.3518, 22.O.3506 & 3.O.3516				
	71.O.3506	Bolt, cs'k. h'd., rod to lever	26	—	MR	
	72.O.3506	Bolt, rod joint	13	—	MR	
28D/1213609	A58/9G	Bolt, 5/16" BSF, rod to lever	4	—	C	
28M/5808573	A27/CS	Nut, slotted, 2BA	39	—	C	
28M/4095895	A24/GS	Nut, slotted, 5/16" BSF	4	—	C	
28P/9527619	SP90/C7	Pin, split, 1/16" dia.	43	—	C	
28W/9419402	SP13/G	Washer, 2 BA	39	—	C	
28W/9419403	SP13/G	Washer, 5/16"	4	—	C	
	191.O.3948	SHAFT, TORQUE, FROM CONTROL SPINDLE, AFT FRONT ENGINE BULKHEAD, TO INBOARD AND OUTB'D ENGINES, PORT AND STBD. (Mod. 1544)	2	—	MR	EE1/31
		Spares for:—				
28D/1214256	A59/2C	Bolt, 2 BA	4	—	C	
	186.O.3948	COUPLING, TORQUE, GROUP	1	—		
		Spares for:—				
17080	162.O.3948	Coupling, torque	1	—	C	
	165.O.3948	End, attachment	1	S96		
17080	162.O.3948	Coupling, torque	1	—	C	
28M/5808573	A27/CS	Nut, slotted, 2BA	4	—	C	
28P/9527619	SP90/C7	Pin, split, 1/16" dia	4	—	C	
	164.O.3948	Plate, coupling	2	S513	MR	
28W/9419402	SP13/C	Washer, 2BA	12	—	C	
		ATTACHMENTS—TORQUE SHAFT, PART No. 191.O.3948				
	184.O.3948	Bolt, special	4	—	MR	
28M/1011467	A27/ES	Nut, slotted, 1/4" BSF	4	—	C	
28P/9527619	SP90/C7	Pin, split, 1/16" dia.	4	—	C	
28W/9418921	SP13/E	Washer, 1/4"	4	—	C	

CONTROLS

ENGINE, AFT OF FRONT SPAR, IN CENTRE PORTION FUSELAGE

Ref. No.	Part No.	Description 1 2 3 4	No. off	Matl. Spec.	Cl. of St. M.R.	Plate and Illust'n No.
		SPINDLE, CONTROL, AFT FRONT ENGINE ... BULKHEAD, INB'D ENGINE BAY, PORT (177.O.3948)) (Pre Mod. 2452)	—	—	—	EE2/32
		SPINDLE CONTROL AND SUPPORTS, AFT ... FRONT ENGINE BULKHEAD, IN'BD ENGINE BAY, PORT (193.O.3948) (Mod. 2452)	—	—		
		Spares for:—				
	47.O.3948	Bracket, reinforcing (Pre Mod. 980)	1	—		
	150.O.3948	Bracket, reinforcing (Mod. 980)	1	—		
		ATTACHMENTS—BRACKET, PART No. 47.O.3948 OR 150.O.3948				
28D/9436920	A25/1C	Bolt, 2 BA	9	—	C	
28W/9419402	SP13/C	Washer, 2 BA	9	—	C	
17550	129.O.3948	LEVER, INTERMEDIATE, GROUP ..... (Pre Mod. 2452)	1	—	B	EE2/33
	192.O.3948	PILLAR, INTERMEDIATE, GROUP (Mod. 2452)	1	—	MR	
		Spares for:—				
	61.O.3948	BOX, BEARING, GROUP	1	—		
		Spares for:—				
	R & M					
2A/9501177	KLNJ1/2	Bearing	2	—	C	
	23.O.3948	Housing, bearing	2	DTD130		
	25.O.3948	Tube, distance	1	DTD133		
	139.O.3948	Lever (Pre Mod. 2452)	1	DTD130		
28M/4095917	A24/JS	Nut, slotted, 3/8" BSF	1	—	C	
28P/9527619	SP90/C8	Pin, split, 1/16" dia	1	—	C	
	20.O.3948	Spindle	1	S96		
7787	24.O.3948	Washer, cup	1	S1	C	
		ATTACHMENTS—LEVER, PART No. 129.O.3948				
28D/9133011	A25/2C	Bolt, 2 BA	4	—	C	
28W/9419402	SP13/C	Washer, 2 BA	4	—	C	
	1.O.4312	SPINDLE, CONTROL, GROUP (Mod. 1544) ..	1	—		EE2/34
		Spares for:—				
1433932	9.O.4150	BOX, BEARING, GROUP	1	—	B	
		Spares for:—				
	R & M					
2A/9501177	KLNJ1/2"	Bearing	2	—	C	
	23.O.3948	Housing, bearing	2	DTD130		
	141.O.3948	Lever	1	S95		
28M/4095917	A24/JS	Nut, slotted, 3/8" BSF	1	—	C	
28P/9527619	SP90/C7	Pin, split, 1/16" dia	1	—	C	
7785	36.O.3948	Spindle	1	S96	C	
1505474	173.O.3948	Spinning	1	L72	C	
7787	24.O.3948	Washer, cup	1	S1	C	
	163.O.3948	Coupling, torque	1	—	MR	
	26.O.3948	Fork-end, control arm	1	S96	MR	
		ATTACHMENTS—CONTROL SPINDLE PART No. 1.O.4312				
28D/9436920	A25/1C	Bolt, 2 BA	3	—	C	
28W/9419402	SP13/C	Washer, 2 BA	3	—	C	

ENGINE, AFT OF FRONT SPAR, IN CENTRE PORTION FUSELAGE

Ref. No.	Part No.	Description (1 2 3 4)	No. off	Matl. Spec.	Cl. of St. M.R.	Plate and Illust'n No.
		SPINDLE, CONTROL, AFT FRONT ENGINE BULKHEAD, OUTB'D ENGINE BAY, PORT (179.O.3948)				
		Spares for:—				
	130.O.3948	Bracket, reinforcing	1	—		
		ATTACHMENTS—BRACKET, PART No. 130.O.3948				
28D/9436920	A25/1C	Bolt, 2 BA	7	—	C	
28W/9419402	SP13/C	Washer, 2 BA	7	—	C	
	13.O.3948	LEVER, INTERMEDIATE, GROUP	1	—	MR	EE2/36
		Spares for:—				
	61.O.3948	BOX, BEARING, GROUP	1	—	MR	
		Spares for:—				
2A/9501177	R & M KLNJ.1/2"	Bearing	2	—	C	
	23.O.3948	Housing, bearing	2	DTD130		
	25.O.3948	Tube, distance	1	DTD133		
7789	19.O.3948	Lever	1	DTD688	C	
28M/4095917	A24/JS	Nut, slotted, 3/8" BSF	1	—	C	
28P/9527619	SP90/C7	Pin, split, 1/16" dia.	1	—	C	
	20.O.3948	Spindle	1	S96		
7787	24.O.3948	Washer, cup	1	S1	C	
		ATTACHMENTS—LEVER, PART No. 13.O.3948				
28D/9436920	A25/1C	Bolt, 2 BA	4	—	C	
28W/9419402	SP13/C	Washer, 2 BA	4	—	C	
	3.O.4312	SPINDLE, CONTROL, GROUP (Mod. 1544)	1	—		EE2/37
		Spares for:—				
1432732	7.O.4150	BOX, BEARING, GROUP	1	—	B	
		Spares for:—				
2A/9501177	R & M KLNJ1/2"	Bearing	2	—	C	
	23.O.3948	Housing, bearing	2	DTD130		
	133.O.3948	Lever	1	S95		
28M/4095917	A24/JS	Nut, slotted, 3/8" BSF	1	—	C	
28P/9527619	SP90/C7	Pin, split, 1/16" dia.	1	—	C	
7785	36.O.3948	Spindle	1	S96	C	
1505475	174.O.3948	Spinning	1	L72	C	
7787	24.O.3948	Washer, cup	1	S1	C	
	163.O.3948	Coupling, torque	1	—	MR	
	26.O.3948	Fork-end, control arm	1	S96	MR	
		ATTACHMENTS—CONTROL SPINDLE PART No. 3.O.4312				
28D/9436920	A25/1C	Bolt, 2 BA	2	—	C	
28M/1012015	AGS2001/C1/66	Nut, stiff, 2 BA	2	—	C	
28W/9419402	SP13/C	Washer, 2 BA	2	—	C	

CONTROLS

ENGINE, AFT OF FRONT SPAR, IN CENTRE PORTION FUSELAGE

Ref. No.	Part No.	Description 1 2 3 4	No. off	Matl. Spec.	Cl. of St. M.R.	Plate and Illust'n No.
		SPINDLE, CONTROL, AFT FRONT ENGINE .. BULKHEAD, INBOARD ENGINE BAY, STBD. (176.O.3948)	–	–		EE1/38
		Spares for:–				
	153.O.3948	Bracket, reinforcing	1	–		
		ATTACHMENTS–BRACKET, PART No. 153.O.3948				
28D/9436920	A25/1C	Bolt, 2 BA	10	–	C	
28W/9419402	SP13/C	Washer, 2 BA	10	–	C	
	2.O.4312	SPINDLE, CONTROL, GROUP (Mod. 1544) .	1	–		
		Spares for:–				
13110	6.O.4150	BOX, BEARING, GROUP	1	–	C	
		Spares for:–				
	R & M					
2A/9501177	KLNJ.1/2"	Bearing	2	–	C	
	23.O.3948	Housing, bearing	2	DTD130		
	134.O.3948	Lever	1	S95		
28M/4095917	A24/JS	Nut, slotted, 3/8" BSF	1	–	C	
28P/9527619	SP90/C7	Pin, split, 1/16" dia.	1	–	C	
7785	36.O.3948	Spindle	1	S96	C	
1505474	173.O.3948	Spinning	1	L72	C	
7787	24.O.3948	Washer, Cup	1	S1	C	
	163.O.3948	Coupling, torque	1	–	MR	
	26.O.3948	Fork-end, control arm	1	S96	MR	
		ATTACHMENTS–CONTROL SPINDLE, PART No. 2.O.4312				
28D/9436920	A25/1C	Bolt, 2 BA	2	–	C	
28W/9419402	SP13/C	Washer, 2 BA	2	–	C	
		SPINDLE, CONTROL, AFT FRONT ENGINE .. BULKHEAD, OUTB'D ENGINE BAY, STARBOARD (178.O.3948)	–	–		EE1/39
		Spares for:–				
	148.O.3948	Bracket, reinforcing	1	–		
		ATTACHMENT–BRACKET, PART No. 148.O.3948				
28D/9436920	A25/1C	Bolt, 2 BA	5	–	C	
28W/9419402	SP13/C	Washer, 2 BA	5	–	C	
	4.O.4312	SPINDLE, CONTROL, GROUP (Mod. 1544) .	1	–		
		Spares for:–				
1505476	8.O.4150	BOX, BEARING, GROUP	1	–	C	
		Spares for:–				
	R & M					
2A/9501177	KLNJ.1/2"	Bearing	2	–	C	
	23.O.3948	Housing, bearing	2	DTD130		
	105.O.3948	Lever	1	S95		
28M/4095917	A24/JS	Nut, slotted, 3/8" BSF	1	–	C	
28P/9527619	SP90/C7	Pin, split, 1/16" dia.	1	–	C	
7785	36.O.3948	Spindle	1	S96	C	
	175.O.3948	Spinning	1	L72	C	
7787	24.O.3948	Washer, cup	1	S1	C	

ENGINE, AFT OF FRONT SPAR, IN CENTRE PORTION FUSELAGE

Ref. No.	Part No.	Description 1 2 3 4	No. off	Matl. Spec.	Cl. of St. M.R.	Plate and Illust'n No.
		SPINDLE, CONTROL, GROUP (4.O.4312) (Mod. 1544) (Cont'd)				
	163.O.3948	Coupling, torque	1	—	MR	
	26.O.3948	Fork-end, control arm	1	S96	MR	
		ATTACHMENTS—CONTROL SPINDLE, PART No. 4.O.4312				
28D/9436920	A25/1C	Bolt, 2 BA	2	—	C	
28W/9419402	SP13/C	Washer, 2 BA	2	—	C	
5CW/7889	HONEYWELL 1/HS/N2	Switch, Limit	4	—	B	EE1/40

CONTROLS

ENGINE, AFT OF FRONT SPAR, IN CENTRE PORTION FUSELAGE

Ref. No.	Part No.	1 2 3 4	Description	No. off	Matl. Spec.	Cl. of St. / M.R.	Plate and Illust'n No.

CONTROLS

ENGINE, AFT OF FRONT SPAR, IN CENTRE PORTION FUSELAGE

SUMMARY OF STANDARD ITEMS

Stores Ref.		No. off	Stores Ref.		No. off	Stores Ref.		No. off
Section	Ref. No.		Section	Ref. No.		Section	Ref. No.	
28D	13412	5	28N	2001688	2	28W	9157971	16
28D	1010030	4				28W	9418921	16
28D	1010658	4				28W	9419402	224
28D	1213609	4	28P	833	27	28W	9419403	6
28D	1214459	2	28P	9419488	2	28W	9419454	27
28D	1214526	16	28P	9527619	98	28W	9419465	4
28D	9133011	8	28P	9710567	31	28W	9419466	2
28D	9133012	2				28W	9419488	2
28D	9434880	2						
28D	9436920	113	28R	13504	31			
			28R	13505	6			
28DU	9480231	16						
28M	13267	6						
28M	13412	7						
28M	14833	2						
28M	1011467	28						
28M	1278189	4						
28M	1278190	71						
28M	5808573	59						

PLATE No EE 1
ISSUE 1

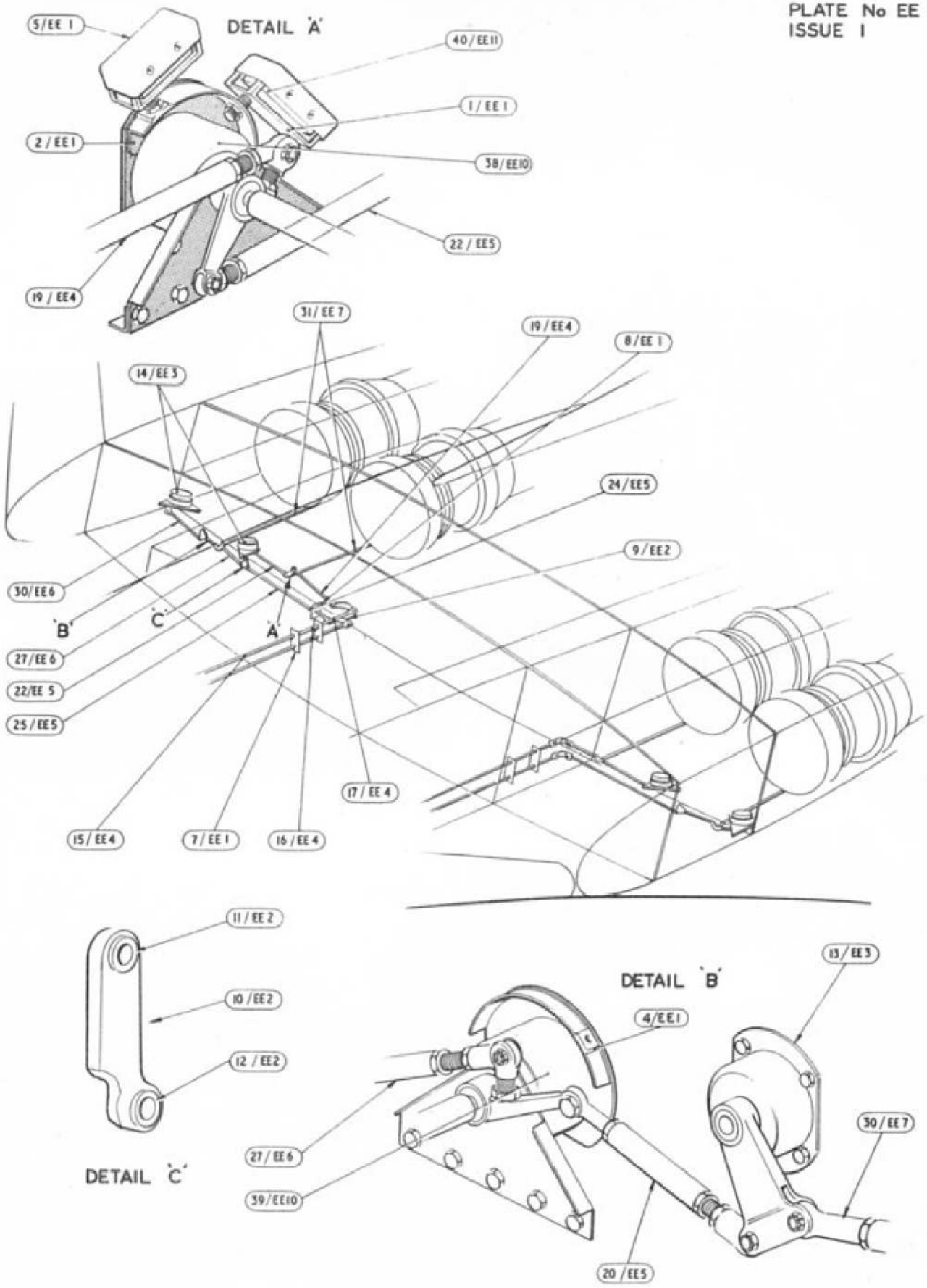

CONTROLS

ENGINE, AFT OF FRONT SPAR, IN CENTRE PORTION FUSELAGE

PLATE No EE 2
ISSUE 1

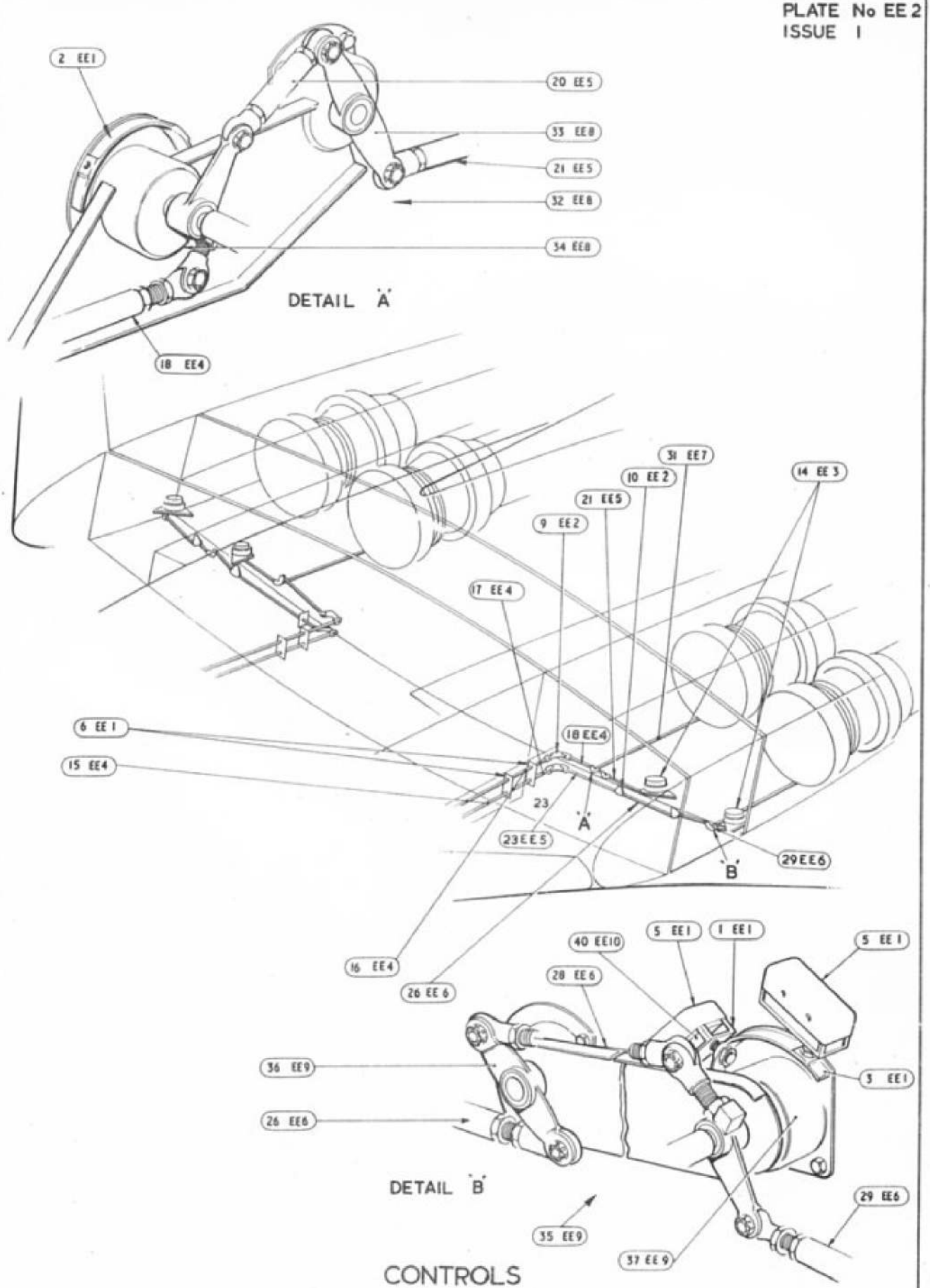

CONTROLS

ENGINE, AFT OF FRONT SPAR, IN CENTRE PORTION FUSELAGE

This file was downloaded
from the RTFM Library.

Link: www.scottbouch.com/rtfm

Please see site for usage terms,
and more aircraft documents.