FLYING, IN CREW'S NACELLE

Ref. No.	Part No.	Description 1 2 3 4	No. off	Matl. Spec.	Cl. of St. M.R.	Plate and Illust'n No.
		CONTROL'S FLYING, ASSEMBLIES IN CREW'S NACELLE (1R4206)				
		Spares for:—				
		BEARING AT FORMER 316, PORT AND STARBOARD (1 & 2R3626)				EF2/1
		Spares for:—				
	1R3460	Base, bearing	2P 1S	DTD271	MR	EF2/2
	3R3626	Packing, piece, tapered	2P 1S	DTD142A	MR	
	4R3626	Packing, port	1	L72		
	1R4410	Roller, bearing, special	6P 3S	—	MR	EF2/3
	DSS2811	Washer, tapered	6P 3S	—		EF2/4
		ATTACHMENTS—BEARING, PART Nos. 1 & 2R3626				
28D/9709461	AS1242/3C	Bolt, 2 BA, csk. hd.	3	—	C	
28D/1007976	AS1242/4C	Bolt, 2 BA, csk. hd.	3	—	C	
28D/1013172	AS1242/5C	Bolt, 2 BA, csk. hd.	3	—	C	
28D/1008145	A25/6E	Bolt, 1/4" BSF, hex. hd.	9	—	C	
28M/9433473	AGS2002/C/1	Nut, 2 BA	9	—	C	
28M/9480017	AGS2001/E/66	Nut, 1/4" BSF	9	—	C	
	1R4422	BEARING, AT FORMER 260, RUDDER, AND ELEVATOR, GROUP	2	—	MR	EF2/5
	2R4422	BEARING, AT FORMER 260, AILERON, GROUP	1	—	MR	EF2/6
		Spares for:—				
	1R4410	Roller, bearing, special	3	—	MR	EF2/7
		ATTACHMENTS—ROLLER, PART No. 1R4410				
28D/1008145	A25/6E	Bolt, 1/4" BSF	3	—	C	EF2/8
28M/9480017	AGS2001/E1/66	Nut, 1/4" BSF	3	—	C	
		ATTACHMENTS—BEARING, PART Nos. 1 & 2R4422				
28D/9133011	A25/2C	Bolt, 2 BA	3	—	C	
28D/9133012	A25/3C	Bolt, 2 BA	6	—	C	
28M/1012015	AGS2001/C1/66	Nut, 2 BA	9	—	C	
28W/9419402	SP13/C	Washer, 2 BA	9	—	C	
8246	GROUP	BEARING AND SEALING, ON REAR PRESSURE BULKHEAD AT FORMER 204 (R4089)	1	—	B	
		Spares for:—				
28N/4186899	HOFFMAN CJ8 or ROSE BROS. RBJ208	Bearing	3	—	C	EF2/9
	GLACIER LTD. 08.DU.10	Bearing, dry	3	—	MR	EF2/10
5869	3R4089	Bush, special	3	DTD130	C	EF2/11
	6R4089	Cap, end	3	S1		EF2/12
	8R4089	Circlip	3	—	MR	EF2/13
	2R4089	Housing, bearing	3	DTD130		EF2/14
	91R3577	Packing, taper	3	DTD130		EF2/15
	ANGUS LTD. 90R3577	Seal, "Gaco" 3/32" thick x 1-3/4"	3	—	MR	EF2/16

CONTROLS

FLYING, IN CREW'S NACELLE

Ref. No.	Part No.	Description 1 2 3 4	No. off	Matl. Spec.	Cl. of St. M.R.	Plate and Illust'n No.
		BEARING AND SEALING, ON REAR PRESSURE BULKHEAD AT FORMER 204 (R4089) (Cont'd.)				
	4R4089	Washer, special	3	L32 or DTD130	MR	EF2/17
	5R4089	Washer, special	3	DTD552A	MR	EF2/18
		ATTACHMENTS—BEARING, PART No. 1R4089				
28D/1200119	A25/4C	Bolt, 2 BA	12	—	C	
28M/5808573	A27/CS	Nut, 2 BA	12	—	C	
28P/9527619	SP90/C7	Pin, split (SP9/C8)	12	—	C	
28W/9419402	SP13/C	Washer	12	—	C	
	87R3577	Bolt, special, rod attachment, formers 246-260	3	—	MR	EF2/19
	4SS4645	Bush, fork-end, 13/32" o/d x 5/16" i/d x .14" long	3	S93	MR	EF2/20
	5SS4645	Bush, fork-end, 13/32" o/d x 5/16" i/d x .18" long	5	S93	MR	EF1/21
	6SS4654	Bush, fork-end, 13/32" o/d x 5/16" i/d x .2" long	1	S93	MR	EF3/22
7918	5SS4646	Bush, fork-end, 11/32" o/d x 1/4" i/d x .18" long	2	S93	C	EF1/23
6632	4R4206	Bush, for rudder connecting link at pilot's control units, 1-5/16" dia. x .2" long	4	DTD130	C	EF1/24
6633	5R4206	Bush, for rudder connecting link at pilot's control units, 1-5/16" dia. x .25" long	6	DTD130	C	EF1/25
	86R3577	Eye-end adjustable, at rear pressure bulkhead, for control rods	3	S1		EF2/26
		INSTALLATION, PILOT'S CONTROL UNIT, COCKPIT (31R3563) Spares for:—				
4604	25R3563	Bolt, special, for mounting brackets	24	—	C	EF1/27
4605	26R3563	Bolt, special, for mounting brackets	14	—	C	EF1/28
4606	27R3563	Bolt, special, for mounting brackets	4	—	C	EF1/29
		CONTROL, ASSEMBLY, PORT, AND STARBOARD (32 & 33R3563) Spares for:—				
2978	14R3563	Bolt, special, attachment pedal link at link arm	2	S96	C	EF1/30
2979	15R3563	Bolt, special, attachment pedal link at link arm	2	S96	C	EF1/31
	16aR3662	Bracket, mounting, starboard	1	DTD683		EF1/32
	17aR3662	Bracket, mounting, port	1	DTD683		EF1/33
	23R3563	Bracket, mounting	1	DTD410		EF1/34
20251	6R3563	Housing, for socket	1	DTD298	C	EF1/35
20252	7R3563	Housing, for socket	1	DTD298	C	EF1/36
	12R3563	Lever, arm	2	DTD130		EF1/37
2976	13R3563	LINK, PEDAL, GROUP Spares for:—	2	—	C	EF1/38
	13bR3563	Bush, "Oilite", 9/16" dia. x 3/16" long	2	—	MR	EF1/38a
	16R3563	Piece, distance, 3/8" o/d x 1/4" long	4	S96	MR	EF1/39

Ref. No.	Part No.	Description (1 2 3 4)	No. off	Matl. Spec.	Cl. of St. M.R.	Plate and Illust'n No.
		CONTROL, ASSEMBLY, PORT AND STARBOARD (32 & 33R3563)(Cont'd)				
		UNIT, CONTROL, PILOT'S, PORT AND STARBOARD (50 & 51R3574)				
		Spares for:—				
1649	1R3603	ADJUSTER, RUDDER PEDALS, GROUP	1	—	C	EF1/40
		Spares for:—				
	16R3574	Collar	1	DTD130	MR	
	6R3603	Handle	1	L65		
	55R3574	Screw, adjusting	1	S96	MR	
13609	1R3602	ARM, PIVOT, CONTROL COLUMN PORT, GROUP	1	—	A	EF1/41
13610	2R3602	ARM, PIVOT, CONTROL COLUMN, STARBOARD, GROUP	1	—	A	EF1/42
		Spares for:—				
2A/9500418	HOFFMAN T.13	Bearing	1	—	C.	EF1/43
2A/9500383	HOFFMAN LS7.ACD	Bearing	2	—	C	EF1/44
28N/2001716	AGS2030/26	Circlip	1	—	C	EF1/45
1655	11R3574	Gear, bevel	1	K.Monel	C	EF1/46
	6R3602	Housing	1	DTD364B		EF1/47
	14R3602	LEVER, PORT, GROUP	1	—		EF1/48
		Spares for:—				
2A/9500463	SKEFCO CBA2	Bearing	1	—	C	
5K/7000517	AS3360/C3E	Lead, bonding	1	—	C	
17940	1SS5880	Plate, securing	1	—	C	
	15R3602	LEVER, STARBOARD, GROUP	1	—		EF1/49
		Spares for:—				
2A/9500465	SKEFCO I.132498	Bearing	1	—	C	EF1/50
2A/9500463	SKEFCO CBA2	Bearing	1	—	C	EF1/51
5K/7000517	AS3360/3CE	Lead, bonding	1	—	C	
17940	1SS5880	Plate, securing	1	—	C	
17942	2SS5880	Plate, securing	1	—	C	
	7R3602	Locknut	1	DTD364B		EF1/52
28N/9156370	SP.21	Nipple, grease	1	—	C	EF1/53
	8R3602	Ring, clamp	1	DTD364B		EF1/54
	11R3602	Stud	2	S96	MR	EF1/55
	55R3574	Screw, adjusting	1	S96	MR	EF1/56
	9R3602	Tube, distance, 1" dia. x 2-1/8"	1	DTD364B		EF1/57

CONTROLS

FLYING, IN CREW'S NACELLE

Ref. No.	Part No.	Description (1 2 3 4)	No. off	Mati. Spec.	Cl. of St. / M.R.	Plate and Illust'n No.
		UNIT, CONTROL, PILOT'S, PORT AND STARBOARD (50 & 51R3574) (Cont'd)				
8799	45R3574	BEARING, GROUP	1	–	B	EF3/58
		Spares for:–				
	HOFFMAN CJ13 or ROSE BROS. RBJ213	Bearing	1	–		
	GLACIER 20DU16	Bush	1	–		
	45dR3574	Circlip	1	–		
28N/2001547	AGS2031/29	Circlip	1	–	C	
	45aR3574	Housing	1	DTD130		
2A/9500418	HOFFMAN T13	Bearing, at spigot, port	1	–	C	EF1/59
2A/9500413	SKEFCO 400015	Bearing, port	1	–	C	EF3/60
2A/9500422	SKEFCO I.132246	Bearing	3	–	C	EF1/61
2A/9500427	SKEFCO I.132627	Bearing	4	–	C	EF3/62
	41R3574	BLOCK, TOE BRAKE, R.H. GRP.	1	–		EF1/63
	42R3574	BLOCK, TOE BRAKE, L.H. GRP.	1	–		EF1/64
		Consisting of:–				
	104SS3553	Adaptor, special	2	DTD364B	MR	EF1/65
28F/9439106	AGS1105/A	Adaptor	2	–	C	EF1/66
28F/9423236	AGS1132/A	Banjo	2	–	C	EF1/67
	41bR3574	Block, junction, R.H.	1	–	MR	EF1/68
	42bR3574	Block, junction, L.H.	1	–	MR	EF1/69
28F/4051723	AGS1173/A	Bolt, banjo	2	–	C	EF1/70
28F/9128952	AGS1174	Screw, bleed	2	–	C	EF1/71
1433243	27R3574	Bolt, special, through spool	2	DTD130	C	EF1/72
	32R3574	BRACKET, FORK MOUNTING, PORT, GROUP	1	–		EF1/73
		Spares for:–				
	20R3574	Bush, 7/8" dia. x 1/4" long	2	S1	MR	
	19Q1903	Bracket, foot motor pipes (Make from 352SS3075, Ref. 26DC/8049)	1	DTD364B		EF1/74
	20Q1903	Bracket, foot motor pipes (Make from 352SS3075, Ref. 26DC/8049)	1	DTD364B		EF1/75

Ref. No.	Part No.	Description (1 2 3 4)	No. off	Matl. Spec.	Cl. of St. M.R.	Plate and Illust'n No.
		UNIT, CONTROL, PILOT'S, PORT AND STARBOARD (50 & 51R3574) (Cont'd)				
	6R3574	CAP, HOUSING, STARBOARD, GROUP	1	—		EF1/77
		Spares for:—				
26FP/13044	1SS3260	Plate, serial number	1	—	C	
1510450	17R3574	Collar, for bevel gear on forward mounting rail	3	DTD142A	C	EF1/78
	16R3574	Collar, for trunnion on pedal adjuster	1	DTD130	MR	EF1/79
	38R3574	Collar, screwed, for pedal adjuster	1	DTD130		EF1/80
12761	1R4425	COLUMN, AILERON CONTROL, GROUP	1	—	B	EF1/81
8858	56R3574	COVER, DUST, GROUP	2	—	C	EF1/82
	2R3646	Cover, control unit, top	1	Rubber	MR	EF1/83
	3R3646	Cover, control unit, bottom	1	Rubber	MR	EF1/84
27VA/5165	DUNLOP AC13812	Cylinder, master	2	—	A	EF1/85
1433008	10R3574	Gear, bevel	1	K. Monel	C	EF1/86
1433007	14R3574	Gear, bevel	1	K. Monel	C	EF1/87
27J/1503260	DUNLOP AC61320	Handgrip (Mod. 2338)	1	—	B	EF1/88
1510346	GROUP	Housing, c/w cap. port (3 & 5.R.3574)	1	DTD721	C	EF1/89
	4R3574	HOUSING, STARBOARD, GROUP	1	—		EF1/90
		Spares for:—				
	20R3574	Bush	2	S1	MR	
20255	1R4357	LEVER, AILERON, AND SUPPORT FOR CONTROL UNIT, PORT, GROUP	1	—	B	
	1R3566	LEVER, AILERON, AND SUPPORT FOR CONTROL UNIT, STARBOARD, GROUP	1	—		
		Spares for:—				
2A/9500427	SKEFCO TTS18-1/2	Bearing	1	—	B	EF3/91
2A/9500410	SKEFCO CBS2	Bearing on levers	6	—	B	EF3/92
2986	6R3566	Bolt, special, 1/4" BSF x 0.6875" long	1	S96	C	EF3/93
2987	5R3566	Bolt, special, 1/4" BSF x 1.4375" long	1	S96	C	EF4/94
	11R3566	Bolt, adjustment, 2" long	1	S96	MR	EF3/95
2985	12R3566	Bolt, adjustment, 1-1/4" long	1	S96	C	EF3/96
	AS3360/C3G	Lead, bonding	1	—		
	3R4357	LEVER, PORT, GROUP	1	—		EF3/97
	3R3566	LEVER, STARBOARD, GROUP	1	—		EF3/98
		Spares for:—				
2A/9500465	SKEFCO I.132498	Bearing	1	—	B	
17942	2SS5880	Plate, securing	1	—	C	
	7R3566	Tube, distance	2	T4		EF3/99

CONTROLS

FLYING, IN CREW'S NACELLE

Ref. No.	Part No.	Description (1 2 3 4)	No. off	Matl. Spec.	Cl. of St. M.R.	Plate and Illust'n No.
		UNIT, CONTROL, PILOT'S, PORT AND STARBOARD (50 & 51R3574) (Cont'd)				
13184	13R3574	LEVER, AILERON LINKAGE, STARBOARD, GROUP	1	—	B	EF3/100
		Spares for:—				
2A/9500465	SKEFCO I.132498	Bearing	2	—	C	EF3/101
2A/9500413	SKEFCO 400015	Bearing	1	—	C	EF3/102
	AS3360/C3G	Lead, bonding	2	—		
17942	2SS5880	Plate, securing	3	—	C	
10752	60R3574	LEVER, RUDDER, INTERMEDIATE, PORT, GROUP (Mod. 808)	1	—	B	EF1/103
		Spares for:—				
2A/9500465	SKEFCO I.132498	Bearing	2	—	C	EF1/104
2A/9500418	HOFFMAN T13	Bearing	1	—	C	EF1/105
17942	2SS5880	Plate, securing	2	—	C	
17945	11SS5880	Plate, securing	1	—	C	
28N/9156370	SP21	Nipple, grease	2	—	C	
	57R3574	PLATFORM, PEDAL, L.H., GROUP	1	—	MR	EF1/107
8131	58R3574	PLATFORM, PEDAL, R.H., GROUP	1	—	B	EF1/108
		Spares for:—				
	8cR3574	Bush, "Oilite"	2	—	MR	
		PLATE, COVER FOR CONTROL COLUMN HOUSING, PORT AND STARBOARD (1R3649) (1R3650)				
		Spares for:—				
	3R3649	Plate, cover, bottom, port	1	L72	MR	EF1/109
	3R3650	Plate, cover, bottom, starboard	1	L72	MR	EF1/110
2992	2R3649	Plate, cover, top, port	1	L72	C	EF1/111
	2R3650	Plate, cover, top, starboard	1	L72	MR	EF1/112
	21R3574	Screw, shouldered, for trunnion	2	S96	MR	EF1/113
4608	31R3574	Screw, grub, 3/8" long, for pivot arm	1	S96	C	EF1/114
	33R3574	Spigot, port	1	S96		EF1/115
5862	46R3574	SPOOL, PEDAL, GROUP	2	—	B	EF1/116
		Spares for:—				
	46aR3574	Bush, 1-3/4" x 1-1/8" x 5/8"	1	DTD130		
	46bR3574	Bush, 1-1/8" dia. x 5/8" long	1	DTD130		
	46dR3574	Bush, Oilite, 3/4" dia. x 5/16" long	2	—		
17239	7R3574	STIRRUP, RUDDER PEDAL, GROUP	2	—	C	EF1/117
		Spares for:—				
4061	7bR3574	Bush, 3/4" dia. x 1/4" long	2	S96	C	

Ref. No.	Part No.	Description (1 2 3 4)	No. off	Matl. Spec.	Cl. of St. / M.R.	Plate and Illust'n No.
		UNIT, CONTROL, PILOT'S, PORT AND STARBOARD (50 & 51R3574) (Cont'd)				
	AS4568	Strap, toe	2	–	MR	EF1/118
1647	15R3323	TREAD, TOE BRAKE, GROUP	2	–	C	EF1/119
	19R3574	TRUNNION, PEDAL ADJUSTER, GROUP	1	–	MR	EF1/120
		Spares for:–				
28N/9156370	SP21	Nipple, grease	1	–	C	
28W/4674500	AS1905/E10	Washer, saddle	2	–	C	
13767	61R3574	Tube, distance, 1.2" long, port	1	L62	C	EF1/121
1510552	62R3574	Tube, distance, 0.2" long, port	1	DTD130	C	EF1/122
6786	28R3574	Tube, distance, for bolt through pedal spool	2	T35	C	EF1/123
13218	26R3574	Tube, distance, for linkage lever attachment	1	L63	C	EF3/124
	39R3574	Tube, torque	1	S110		EF1/125
13217	25R3574	Washer, laminated, for linkage lever attachment	2	–	C	EF3/126
	35R3574	Washer, special, for spigot, port	1	DTD130		EF1/127
2982	17R3563	Eyebolt, lower	2	S96	C	EF1/128
2981	18R3563	Eyebolt, upper	2	S96	C	EF1/129
1510347	19R3563	STRUT, TUBULAR, GROUP	2	–	MR	EF1/130
	1R4356	LEVER, AILERON AND MOUNTING BRACKET, GROUP	1	–	MR	EF2/131
		Spares for:–				
2A/9500420	SKEFCO I.132626	Bearing	1	–	C	EF2/132
	1R4092	BRACKET, MOUNTING, GROUP	1	–	MR	EF2/133
		Spares for:–				
	11R4085	Shaft, 1-3/8" o/d x 5"	1	DTD464A		
	5R3568	Collar, 1-3/4" dia. x 7/8" long	1	DTD142A		EF2/134
5K/1037444	AS3360/C4C	Lead, bonding	1	–	C	
	1R4355	LEVER, AILERON, GROUP	1	–		EF2/135
		Spares for:–				
	5R4087	BOSS, CENTRE, GROUP	1	–		
		Spares for:–				
2A/9500420	SKEFCO I.132626	Bearing	1	–	C	EF2/136
	13SS5880	Plate, securing	1	–	C	
17947	4R4087	Weight, balance, 3-3/8" dia. x 1-1/4"	1	S1	MR	EF2/137
	4R3568	Tube, distance, 1-1/2" o/d x 1" long	1	T4		EF2/138
28W/9536512	AS103/C12	Washer, saddle	2	–	C	EF2/139

CONTROLS

FLYING, IN CREW'S NACELLE

Ref. No.	Part No.	Description (1 2 3 4)	No. off	Matl. Spec.	Cl. of St. M.R.	Plate and Illust'n No.
7927	1R4434	LINK, INTERCONNECTING, BETWEEN CONTROL COLUMN AND ELEVATOR LEVER, GROUP	2	—	B	EF4/140
		Spares for:—				
	2SS2819	Clip, bonding lead (Make from Ref. 9611198)	1	L70	LM	
	AS3360/C3G	Lead, bonding	1	—		
	A3GSS4222	Lead, bonding	1	—		
1657	2R3605	LINK, EYE-END, SWIVEL, GROUP	1	—	B	EF3/141
		Spares for:—				
	SKEFCO					
2A/9500415	CBS4	Bearing	1	—	C	EF4/142
2A/9500413	400015	Bearing	1	—	C	EF4/143
	4R3605	Cap, screwed	1	DTD130		
	8R3605	EYE-END, GROUP	1	—		EF4/144
		Spares for:—				
	SKEFCO					
2A9500465	I.132498	Bearing	1	—	C	
17942	2SS5880	Plate, securing	1	—	C	
	3R3605	Piece, distance	1	DTD130		EF4/145
1658	7R3605	Screw, grub	1	S1	C	EF4/146
		MOUNTING, RUDDER AND ELEVATOR LEVERS, PORT (1R3568)				
		Spares for:—				
	SKEFCO					
2A/9500420	I.132626	Bearing	2	—	C	EF4/147
28D/1011021	A25/16C	Bolt, hex. hd., 2 BA	2	—	C	EF4/148
	5R3568	Collar, bearing, retaining	2	DTD142A		EF4/149
5K/1037444	AS3360/C4C	Lead, bonding	1	—	C	EF4/150
	1R3570	LEVER, ELEVATOR, GROUP	1	—		EF4/151
	1R3571	LEVER, RUDDER, GROUP	1	—		
		Spares for:—				
	4R3570	BOSS, CENTRE, GROUP	1	—		
		Spares for:—				
	SKEFCO					
2A/9500420	I.132626	Bearing	1	—	C	EF4/153
17947	13SS5880	Plate, securing	1	—	C	
	5R3570	Bush, spacing	3	—		EF4/154
		LEVER, BALANCE, FOR RUDDER LEVER (7R3570)				
		Spares for:—				
4612	6R3570	Weight, balance	2	Lead	C	EF4/155
28W/9536512	AS1903/C12	Washer, saddle	2	—	C	EF4/156
26FP/15393	CSS157	Washer, taper	1	—	C	EF4/157
	12R3577	Plate, link, aileron connecting rod and lever on elevator torque shaft	2	L72	MR	EF3/158

Ref. No.	Part No.	Description (1 2 3 4)	No. off	Matl. Spec.	Cl. of St. M.R.	Plate and Illust'n No.
7922	1R4431	ROD, CONTROL, ADJUSTABLE RUDDER, AT PILOT'S CONTROL UNIT, GROUP	1	—	B	EF2/159
		Spares for:—				
	55SS1973	Clip, bonding	2	—		
5K/3403	AS3360/C6C	Lead, bonding	1	—	C	
	AS3360/B3G	Lead, bonding	1	—		
4099	77R3577	Locknut, R.H. thread	1	DTD364B	C	EF4/160
4100	78R3577	Locknut, L.H. thread	1	DTD364B	C	EF4/161
7923	95R3577	EYE-END, ADJUSTABLE, GROUP	1	—	B	EF4/162
		Spares for:—				
	SKEFCO					
2A/9500465	I.132498	Bearing	1	—	C	
17942	2SS5880	Plate, securing	1	—	C	
4101	79R3577	Screw, adjustment	1	T45	C	EF4/163
4130	128R3577	ROD, CONTROL, ELEVATOR, LEVER BELOW PILOT'S FLOOR TO JOINT BETWEEN FORMERS 316 & 330, PORT, GROUP	1	—	B	EF2/164
4131	129R3577	ROD, CONTROL, ELEVATOR, LEVER BELOW PILOT'S FLOOR TO JOINT BETWEEN FORMERS 316 & 330, STARBOARD, GROUP	1	—	B	EF2/165
		Spares for:—				
	123R3577	EYE-END, GROUP	1	—		EF2/166
		Spares for:—				
	SKEFCO					
2A/9500465	I.132498	Bearing	1	—	C	
17942	2SS5880	Plate, securing	1	—	C	
4179	126R3577	FORK-END, GROUP	1	—	B	EF2/167
		Spares for:—				
1660	102R3577	Bush, 9/16" o/d x 3/16" long	1	—	C	
	AS3360/B3G	Lead, bonding	1	—		
7919	1R4429	ROD, AILERON CONTROL, ADJUSTABLE, GROUP	1	—	B	EF3/106
		Spares for:—				
20253	2R4429	Fork, end, screwed	1	DTD364B	C	
4099	77R3577	Locknut, R.H. thread	1	DTD364B	C	EF4/160
4100	78R3577	Locknut, L.H. thread	1	DTD364B	C	EF4/161
4101	79R3577	Screw, adjusting	1	S1	C	EF4/163
	130R3577	ROD, CONTROL, BETWEEN FORMERS 316F & 330F TO JOINT BETWEEN FORMERS 204F & 218F, GROUP	2	—	MR	EF2/168
		Spares for:—				
4150	121R3577	EYE-END, GROUP	1	—	B	EF2/169
		Spares for:—				
	SKEFCO					
2A/9500465	I.132498	Bearing	1	—	C	
17942	2SS5880	Plate, securing	1	—	C	

CONTROLS

FLYING, IN CREW'S NACELLE

Ref. No.	Part No.	Description 1 2 3 4	No. off	Matl. Spec.	Cl. of St. M.R.	Plate and Illust'n No.
		ROD CONTROL, BETWEEN FORMERS 316F & 330F TO JOINT BETWEEN FORMERS 204F & 218F (130R35 & 77) (Cont'd)				
	124R3577	EYE-END, GROUP	1	—		EF2/170
		Spares for:—				
1664	103bR3577	Bush, 1/2" dia. x 5/16" long	1	S96	C	
5K/7000230	AS3360/B3B	Lead, bonding	2	—	C	
	AS3360/B3G	Lead, bonding	2	—		
	87R3296	NUT, ADJUSTMENT, GROUP	2	—		EF2/171
4133	131R3577	ROD, CONTROL, AILERON, BETWEEN FORMERS 246F & 260F TO JOINT BETWEEN FORMERS 204F & 218F, GROUP	1	—	B	EF2/172
		Spares for:—				
	125R3577	FORK-END, GROUP	2	—		EF2/173
		Spares for:—				
1666	107R3577	Bush, 5/8" dia. x 3/16" long	2	S96	C	
5K/7000230	AS3360/B3B	Lead, bonding	1	—	C	
5K/7000231	AS3360/B3C	Lead, bonding	1	—	C	
7924	1R4433	ROD, CONTROL, ELEVATOR TORQUE SHAFT TO LEVER BELOW FLOOR, PORT, GROUP	1	—	B	EF2/174
		Spares for:—				
	123R3577	EYE-END, GROUP	1	—		EF2/175
		Spares for:—				
2A/9500465	SKEFCO I.132498	Bearing	1	—	C	
17942	2SS5880	Plate, securing	1	—	C	
	3SS4181	Lead, bonding	1	—		
	AS3360/B3G	Lead, bonding	1	—		
4178	177R3577	ROD, CONTROL, ADJUSTABLE, STARBOARD, GROUP	1	—	B	EF2/176
		Spares for:—				
	21SS1973	Clip, bonding	2	—		
7923	95R3577	EYE-END, GROUP	1	—	B	EF2/177
		Spares for:—				
2A/9500465	SKEFCO I.132498	Bearing	1	—	C	
17942	2SS5880	Plate, securing	1	—	C	
	126R3577	FORK, END, GROUP	1	—		EF2/178
		Spares for:—				
1660	102R3577	Bush, 9/16" dia. x 3/16" long	2	S96	C	

Ref. No.	Part No.	Description 1 2 3 4	No. off	Matl. Spec.	Cl. of St. M.R.	Plate and Illust'n No.
		ROD, CONTROL, ADJUSTABLE, STARBOARD (177R3577) (Cont'd)				
5K/1037443	AS3360/C6C	Lead, bonding	1	—	C	
	AS3360/B3G	Lead, bonding	1	—		
	3SS4210	Lead, bonding	1	—		
4099	77R3577	Locknut, R.H. thread	1	DTD364B	C	EF4/160
4100	78R3577	Locknut, L.H. thread	1	DTD364B	C	EF4/161
4101	79R3577	Screw, adjusting	1	S1	C	EF4/163
7925	1R4432	ROD, RUDDER CONNECTING, ADJUSTABLE, GROUP	1	—	B	
		Spares for:—				
	2SS2819	Clip, cover (Make from Ref. 9611198)	1	L70	LM	
	55SS1973	Clip, bonding	2	—		
7926	2R4432	FORK-END, SWIVEL, GROUP	1	—	B	EF1/183
		Spares for:—				
2A/9500415	SKEFCO CBS4	Bearing	1	—	C	EF4/184
2A/9500413	SKEFCO 40015	Bearing	1	—	C	EF4/185
	4R3605	Cap, screwed	1	DTD130		EF4/186
	3R4432	Fork-end, swivel	1	S96		EF4/187
	3R3605	Piece, distance	1	DTD130		EF4/188
	4R4432	Fork, end	1	DTD364B		EF4/189
5K/1037443	AS3360/C6C	Lead, bonding	1	—	C	
5K/1051839	AS3360/B6E	Lead, bonding	1	—	C	
4099	77R3577	Locknut, R.H. thread	1	DTD364	C	EF4/160
4100	78R3577	Locknut, L.H. thread	1	DTD364B	C	EF4/161
4101	79R3577	Screw, adjustment	1	S1	C	EF4/163
1658	7R3605	Screw, grub	1	S1	C	EF4/146
	100R3577	Sleeve, screwed	1	DTD364B		EF4/194
7920	1R4430	ROD, AILERON CONTROL, STARBOARD, GROUP	—	—	B	EF2/195
		Spares for:—				
	123R3577	EYE-END, GROUP	1	—		EF2/196
		Spares for:—				
2A/9500465	SKEFCO I.132498	Bearing	1	—	C	
17942	2SS5880	Plate, securing	1	—	C	
	AS3360/B3G	Lead, bonding	2	—		
4150	1R4116	ROD, ELEVATOR AND RUDDER CONTROL, GROUP	2	—	B	EF2/197
		Spares for:—				
	125R3577	EYE-END, GROUP	1	—		EF4/198
		Spares for:—				
2A/9500465	SKEFCO I.132498	Bearing	1	—	C	
17942	2SS5880	Plate, securing	1	—	C	
5K/7000230	AS3360/B3B	Lead, bonding	1	—	C	
5K/7000231	AS3360/B3C	Lead, bonding	1	—	C	

CONTROLS

FLYING, IN CREW'S NACELLE

Ref. No.	Part No.	Description 1 2 3 4	No. off	Matl. Spec.	Cl.of St. M.R.	Plate and Illust'n No.
7450	6R4206	ROD, ELEVATOR CONTROL, GROUP	1	—	B	EF2/199
		Spares for:—				
7820	121R3577	EYE-END, GROUP	1	—		EF2/200
		Spares for:—				
	SKEFCO					
2A/9500465	I.132498	Bearing	1	—	C	
17942	2SS5880	Plate, securing	1	—	C	
	124R3577	EYE-END, GROUP	1	—		EF4/201
		Spares For:—				
1664	103bR3577	Bush, 1/2" dia. x 5/16" long	1	S96	C	
5K/7000230	AS3360/B3B	Lead, bonding	1	—	C	
	AS3360/B3G	Lead, bonding	1	—		
6634	1R4359	ROD, RUDDER CONTROL, ADJUSTABLE, ... GROUP	1	—	B	EF1/202
		Spares for:—				
	2SS2819	Clip, cover (Make from Ref. 9611198)	1	L70	LM	
	2R4359	FORK, END, SWIVEL, GROUP	1	—		EF1/203
		Spares for:—				
	SKEFCO					
2A/9500415	CBS4	Bearing	1	—	C	EF4/184
	SKEFCO					
2A/9500413	400015	Bearing	1	—	C	EF4/185
	4R3605	Cap, screwed	1	DTD130		EF4/186
6636	3R4359	Fork-end, swivel	1	S96	C	EF4/207
	3R3605	Piece, distance	—	DTD130		EF4/188
6635	5R4359	Fork-end	1	DTD130	C	EF1/209
	AS3360/B6G	Lead, bonding	1	—		
5K/1037443	AS3360/C6C	Lead, bonding	1	—	C	
5K/4691289	AS3360/C4G	Lead, bonding	1	—		
4099	77R3577	Locknut, R.H. thread	1	DTD364B	C	EF4/160
4100	78R3577	Locknut, L.H. thread	1	DTD364B	C	EF4/161
4101	79R3577	Screw, adjustment	1	S1	C	EF4/163
1658	7R3605	Screw, grub	1	S1	C	EF4/146
	100R3577	Sleeve, screwed	1	DTD364B		EF4/194
1433520	1R4969	SHAFT, TORQUE, ELEVATOR (Mod. 2183)	1	—	C	EF1/216
		Spares for:—				
4614	14R3575	Bolt, 1/4" BSF, attachment of shaft to floor	18	—	C	EF1/215
	2R4969	SHAFT, TORQUE, ELEVATOR, GROUP ..... (Mod. 2183)	1	—	MR/B	EF1/216
		Spares for:—				
	5R4352	Arm, balance	1	S510	MR	EF1/217
	8R4352	Arm, balance	1	S510	MR	EF1/218
	3R3575	BEARING, GROUP	3	—	MR	EF1/219
		Spares for:—				
	SKEFCO					
2A/9500427	TTS18 1/2	Bearing	1	—	C	
	9R3575	Cap, bearing	1	L72		
	5R3575	Housing, bearing	1	DTD721		

Ref. No.	Part No.	Description 1 2 3 4	No. off	Matl. Spec.	Cl. of St. M.R.	Plate and Illust'n No.
		SHAFT, TORQUE, ELEVATOR (2R4969) (Cont'd)				
	36SS1973	Clip, bonding	1	—		
5K4346015	AS3360/C6E	Lead, bonding	1	—	C	
	4R4969	LEVER, GROUP	1	—	MR	EF1/220
		Spares for:—				
	SKEFCO					
2A/9500465	I.132498	Bearing	1	—	C	
	AS3360/C3G	Lead, bonding	1	—		
17942	2SS5880	Plate, securing	1	—	C	
	3R4969	LEVER, GROUP	2	—	MR	EF1/221
		Spares for:—				
	SKEFCO					
2A/9500465	I.132498	Bearing	1	—	C	
	AS3360/C3G	Lead, bonding	1	—		
17942	2SS5880	Plate, securing	1	—	C	
	5R4969	Shaft	1	T45		
	10R3575	Sleeve, retaining	1	DTD142A		EF1/222
	11R3575	Sleeve, retaining	1	DTD142A	MR	EF1/223
	12R3575	Sleeve, retaining	1	DTD142A		EF1/224
	3R4352	Sleeve, retaining	1	DTD410		EF1/225
	4R4352	Sleeve, retaining	1	DTD410		EF1/226
	AS2808/5/213	Tube, distance	2	—		EF1/227
	6R4352	Weight, balance	1	S1		EF1/228
		Attachments—Balance Weight, Part No. 6R4352				
28D/1012995	A25/22C	Bolt, hex. hd. 2 BA	3	—	C	
28M/1012015	AGS2001/C1/66	Nut, stiff, 2 BA	3	—	C	
28W/9419402	SP13/C	Washer, 2 BA	3	—	C	
		STOPS, FOR CONTROLS BETWEEN FORMERS 274F & 316F, FORT AND STARBOARD (1 & 2R4408)				
		Spares for:—				
2855	1R3952	GUARD, PORT, GROUP	1	—	B	EF2/229
2856	2R3952	GUARD, STARBOARD, GROUP	1	—	B	EF2/230
		Spares for:—				
	3R3952	Guard, formers 274F to 302F, port	1	L72		EF2/231
	4R3952	Guard, formers 274F to 302F, starboard	1	L72		EF2/232
	5R3952	GUARD, FORMER 274F TO 302F, PORT, GROUP	1	—		EF2/233
	6R3952	GUARD, FORMER 274F TO 316F, STARBOARD, GROUP	1	—		EF2/234
		ATTACHMENTS, GUARDS, PART NOS. 1 & 2R3952				
28D/1007982	AS1248/1C	Bolt, mush. hd., 2 BA	12	—	C	

CONTROLS

FLYING, IN CREW'S NACELLE

Ref. No.	Part No.	1 2 3 4	Description	No. off	Matl. Spec.	Cl. of St. / M.R.	Plate and Illust'n No.

CONTROLS

FLYING, IN CREW'S NACELLE

SUMMARY OF STANDARD ITEMS

Stores Ref.		No. off	Stores Ref.		No. off	Stores Ref.		No. off
Section	Ref. No.		Section	Ref. No.		Section	Ref. No.	
2A	9500383	2	28F	4051723	2			
2A	9500410	6	28F	9128952	2			
2A	9500413	5	28F	9423236	2			
2A	9500415	3	28F	9439106	2			
2A	9500418	3						
2A	9500420	5						
2A	9500422	3	28M	1278190	12			
2A	9500427	6	28M	5808573	12			
2A	9500463	2	28M	9433473	9			
2A	9500465	17	28M	9480017	12			
5K	3370	1	28N	19532	3			
5K	1037444	2	28N	2001547	1			
5K	7000230	5	28N	2001716	1			
5K	1051839	1	28N	9156370	4			
5K	1037443	4						
5K	7000231	2						
5K	7000517	2	28P	9527619	12			
5K	5884	1						
			28W	18967	1			
27J	667	1	28W	9419402	21			
			28W	9536512	4			
27VA	5165	2						
28D	1007976	3						
28D	1007982	12						
28D	1008145	12						
28D	1011021	2						
28D	1012995	3						
28D	1013172	3						
28D	1200119	12						
28D	9133011	3						
28D	9133012	6						
28D	9709461	3						

PLATE NO EF I
ISSUE 3

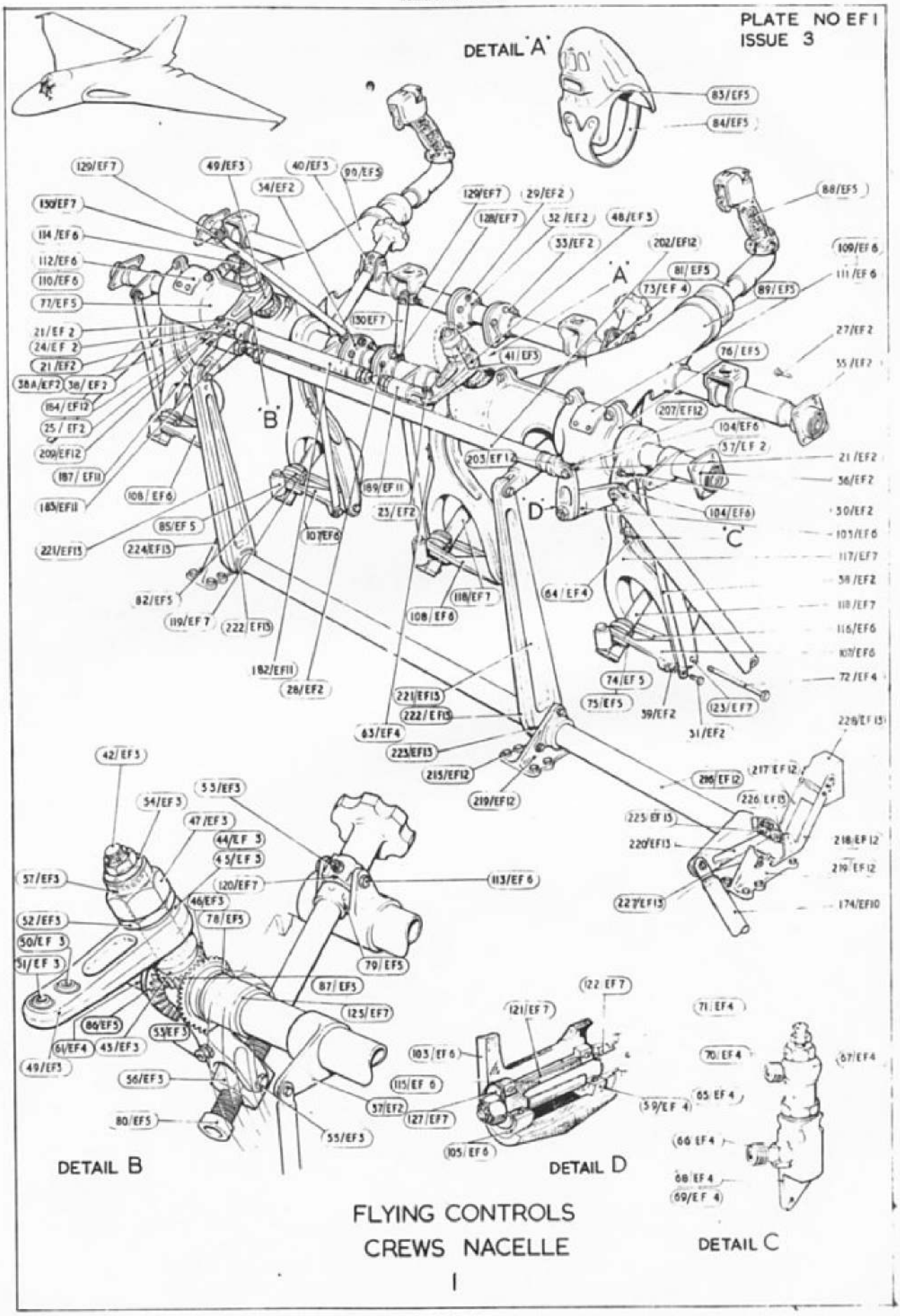

FLYING CONTROLS
CREWS NACELLE

I

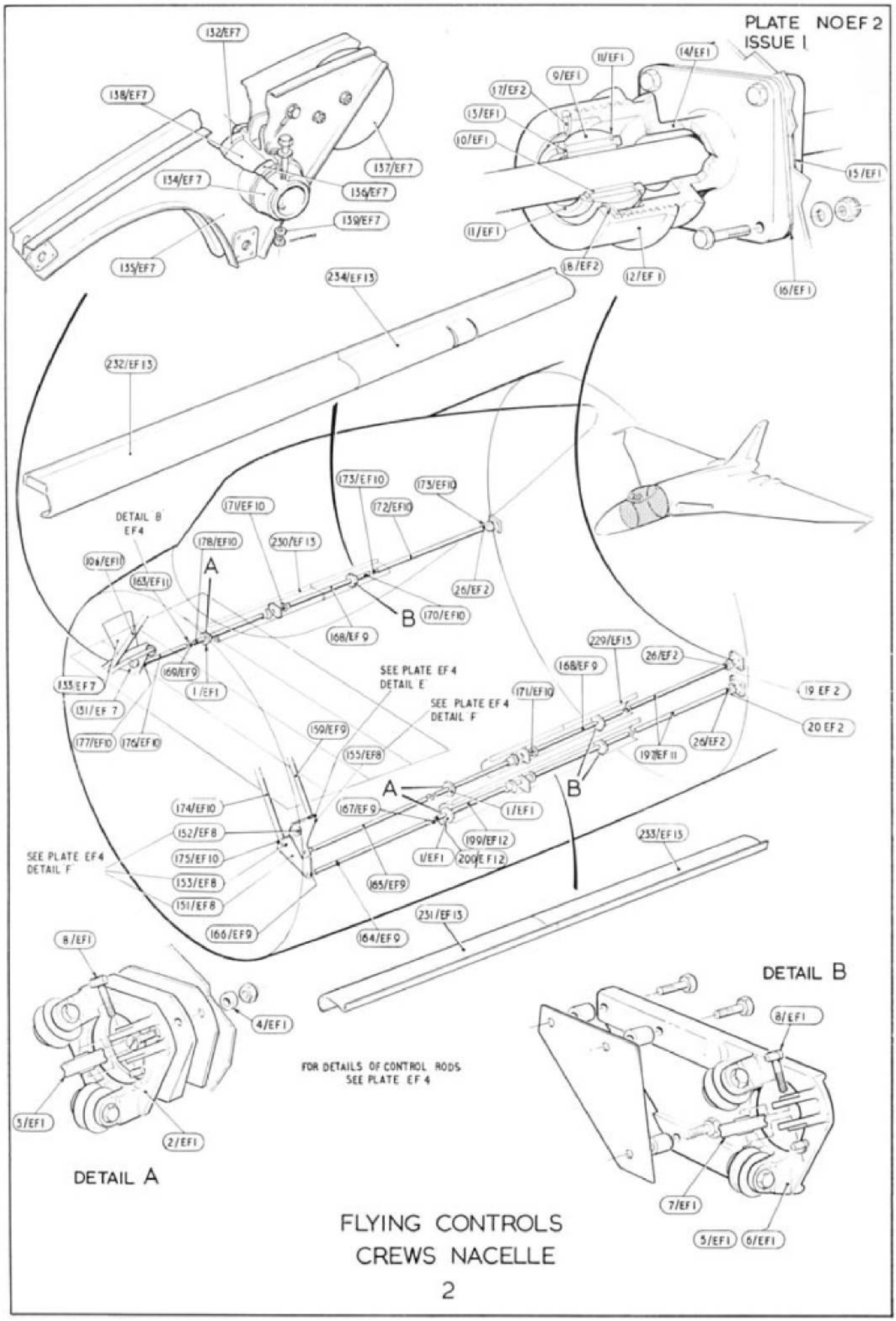

FLYING CONTROLS
CREWS NACELLE
2

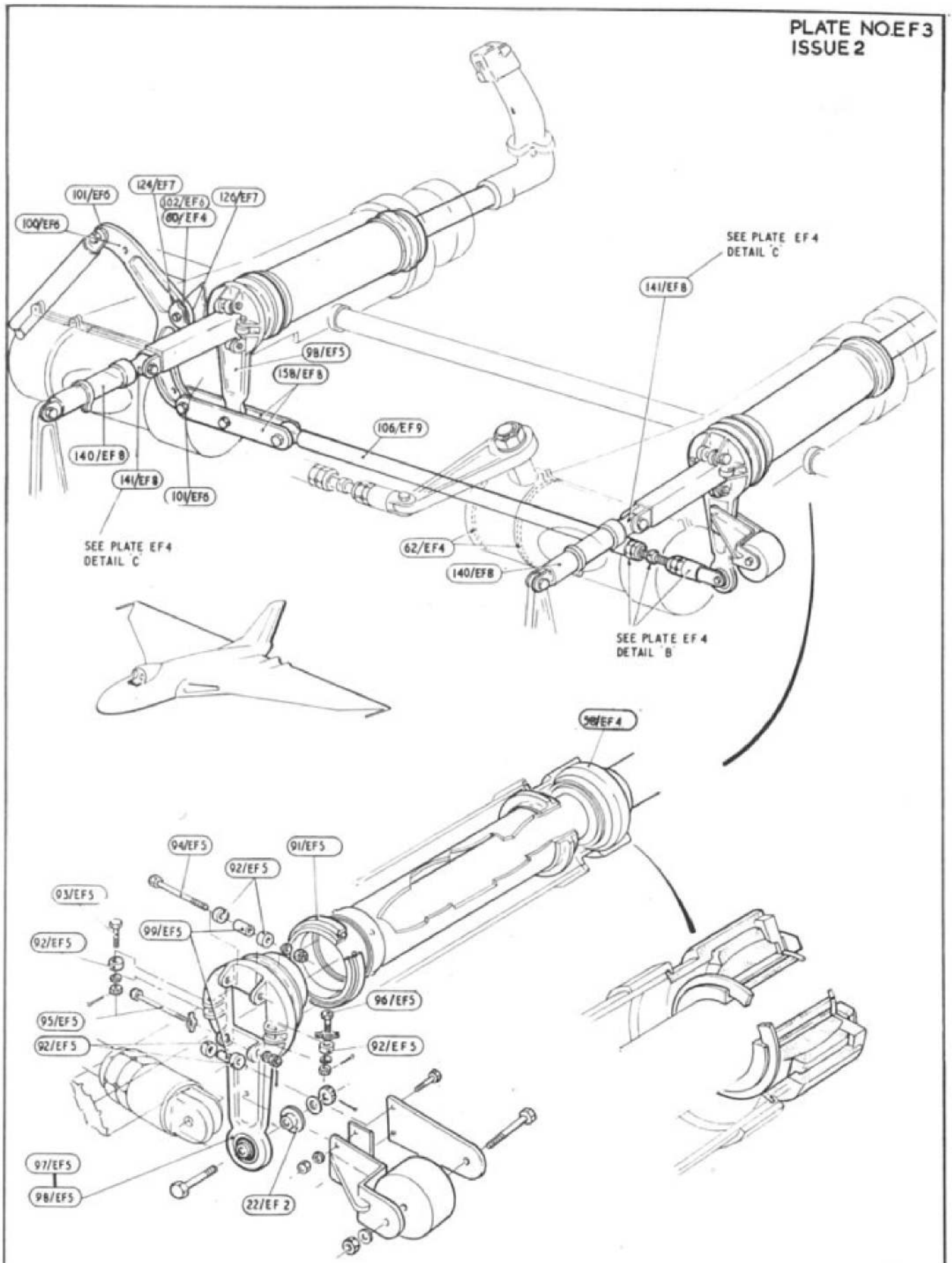

FLYING CONTROLS
CREWS NACELLE
3

PLATE NO.EF4
ISSUE 1

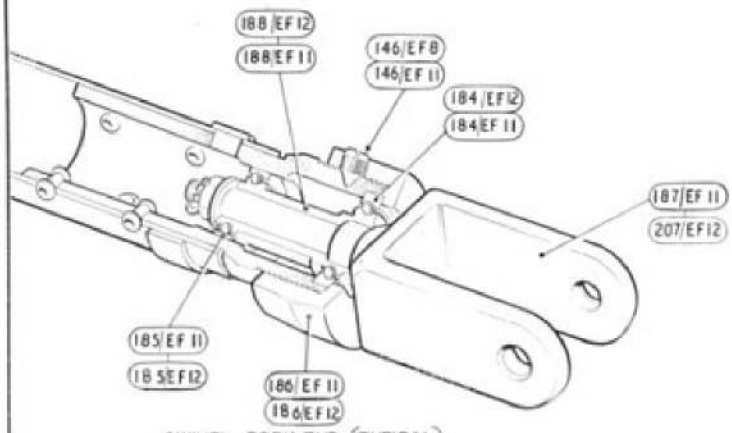

SWIVEL FORK-END (TYPICAL)
DETAIL A

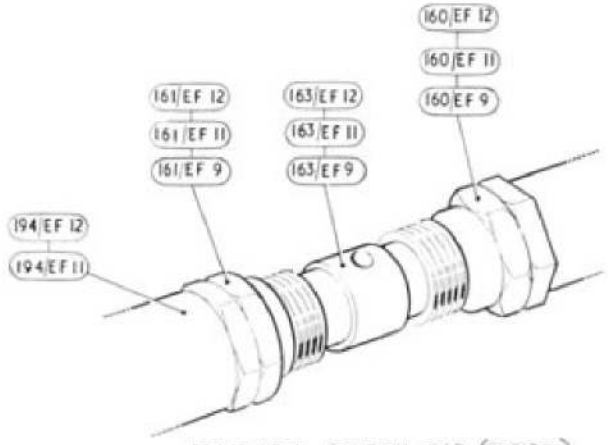

ADJUSTABLE CONTROL ROD (TYPICAL)
DETAIL B

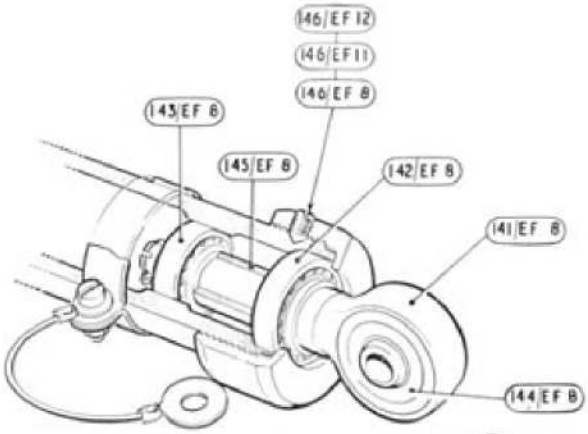

SWIVEL EYE-END (TYPICAL) DETAIL C

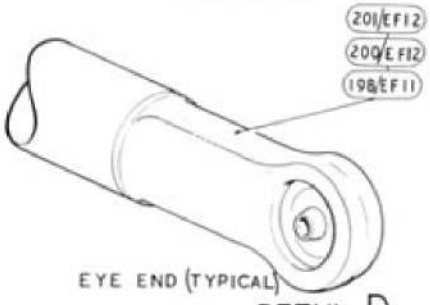

EYE END (TYPICAL)
DETAIL D

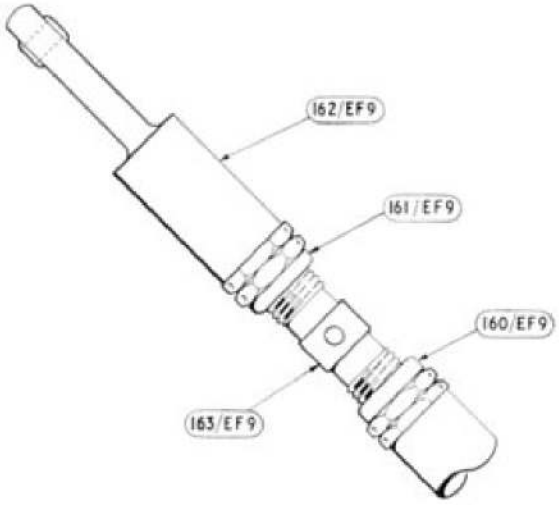

EYE-END ADJUSTABLE (TYPICAL) DETAIL E

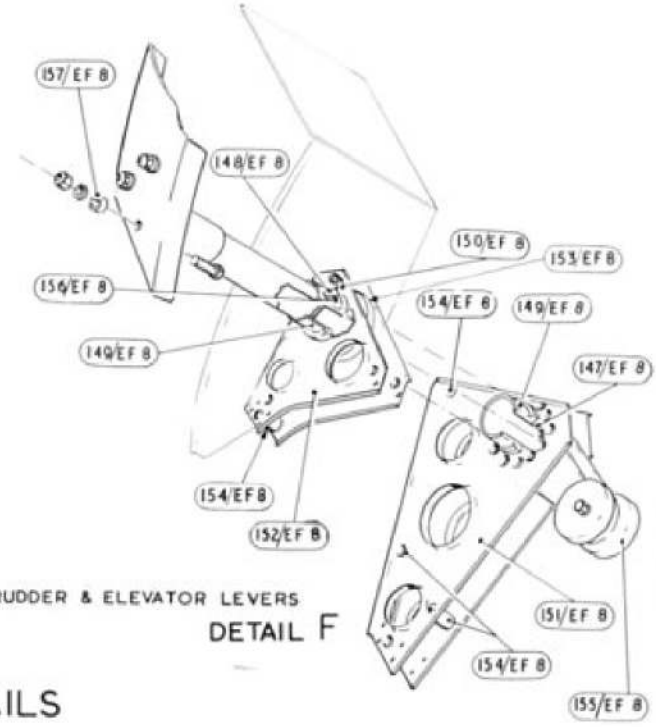

RUDDER & ELEVATOR LEVERS
DETAIL F

DETAILS

FLYING CONTROLS CREWS NACELLE

4

This file was downloaded
from the RTFM Library.

Link: www.scottbouch.com/rtfm

Please see site for usage terms,
and more aircraft documents.