EQUIPMENT SPECIAL OPERATIONAL (S.O.O.)

LONG RANGE CYLINDRICAL FUEL TANKS IN BOMB BAY (REMOVABLE FITTINGS)

Ref. No.	Part No.	Description 1 2 3 4	No. off	Matl. Spec.	Cl. of St. / M.R.	Plate and Illust'n No.
		CYLINDRICAL TANK AND FITTINGS IN FWD. OR AFT POSITION (1P3918), GROUP (Mod. 2014)				
		Spares for:–				
1505184	1P3923	BEAM, SUPPORT, GROUP	2	–	B	HM1/1
		Spares for:–				
	9P3923	BAG, STOWAGE, GROUP	1	–		
28D/1212679	A25/29L	Bolt, 7/16" BSF	2	–	C	
26DL/6002821	1SS4947	Chain, retaining	2	–	C	
28M/9129449	A27/LS	Nut, slotted, 7/16" BSF	2	–	C	
28FP/9703069	AGS2105/819	Pin, pip	2	–	C	
28P/9500929	SP90/E8	Pin, split	2	–	C	
	AS2808/8/250	Tube, distance	2	–	–	
28W/9419478	SP15/L	Washer, 7/16"	2	–	C	
1505183	9P3918	BLOCK, AND LINK, GROUP	4	–	B	HM1/2
		Spares for:–				
	AT63159	Block	1	L65	–	HM1/3
11A/5327	AT38913	Bolt, special	1	S96	C	HM1/4
	1P3928	Link	1	L77 or DTD5020	–	HM1/5
28M/13145	A27QS	Nut, slotted, 5/8" BSF	1	–	C	
28P/1221023	SP90/G12	Pin, split	1	–	C	
28W/9419481	SP15/Q	Washer, 5/8"	1	–	C	
		Attachments–Block and Link (9P3918)				
	AT37491	Bolt, special	1	S96	–	HM1/6
28M/13145	A27/QS	Nut, slotted, 5/8" BSF	1	–	C	
1432635	10P3918	Piece, distance, use at aft blocks, tank in aft position	1	L83	C	HM1/7
28P/1221023	SP90/G12	Pin, split	1	–	C	
28W/9419481	SP15/Q	Washer, 5/8"	2	–	C	
28W/9419493	SP16/Q	Washer, 5/8"	1	–	C	
28N/18394	SP121/N	Collar, 1/2"	8	–	C	HM1/8
		CRUTCHING, FOR ONE TANK IN FW'D OR AFT POSITION (1P3932)				
		Spares for:–				
1505185	6P3932	ADAPTOR, AFT STB'D, FW'D POSITION ONLY, GROUP	1	–	C	HM1/9
	or					
6116001	2P3974	ADAPTOR, AFT STB'D, FW'D POSITION ONLY, GROUP	1	–	C	
1433915	7P3932	ADAPTOR, AFT PORT, FW'D POSITION ONLY, GROUP	1	–	C	HM1/10
	or					
6116002	1P3974	ADAPTOR, AFT PORT, FW'D POSITION ONLY, GROUP	1	–	C	
6116009	2P3932	CRUTCH, FW'D STB'D, GROUP	1	–	–	HM1/11
	or					
	2P3972	CRUTCH, FW'D STB'D, GROUP	1	–		
		Spares for:–				
1433920	2bP3932	Packing, natural rubber, 3/8" thick x 13.0" x 21.75"	1	BS/154 Grade Z11	C	

EQUIPMENT SPECIAL OPERATIONAL (S.O.O.)

LONG RANGE CYLINDRICAL FUEL TANKS IN BOMB BAY (REMOVABLE FITTINGS)

Ref. No.	Part No.	Description 1 2 3 4	No. off	Matl. Spec.	Cl. of St. / M.R.	Plate and Illust'n No.
		CRUTCHING, FOR ONE TANK IN FWD. OR AFT POSITION (1P3932) (Cont'd)				
	3P3932 or	CRUTCH, FWD. PORT, GROUP	1	–	–	HM1/12
6116008	1P3972	CRUTCH, FWD. PORT, GROUP	1	–		
		Spares for:–				
1433920	2bP3932	Packing, natural rubber, 3/8" thick x ... 13.0" x 21.75"	1	BS1154 Grade Z11	C	
1510082	4P3932 or	CRUTCH, AFT STBD., GROUP	1	–	–	HM1/13
1505473	2P3973	CRUTCH, AFT STBD., GROUP	1	–		
		Spares for:–				
1433919	4bP33919	Packing, natural rubber, 3/8" thick x ... 12.0" x 25.0"	1	BS1154 Grade Z11	C	
1510083	5P3932 or	CRUTCH, AFT PORT, GROUP	1	–	–	HM1/14
1505472	1P3973	CRUTCH, AFT PORT, GROUP	1	–		
		Spares for:–				
	4bP3932	Packing, natural rubber, 3/8" thick x ... 12.0" X 25.0"	1	BS1154 Grade Z11		
		ELECTRICAL INSTALLATION, ... CYLINDRICAL TANK (1V13536)				
		Spares for:–				
	8V13536	Angle	4	–	–	HM2/15
5X/6200370	1V5650	BLOCK, TERMINAL	1	–	C	HM1/16
6A/4344788	SMITH'S BT21/33	Box, cable	1	–	C	HM1/17
	3915V7909	CABLE, (F3915), FWD. PUMP TO PLUG .. 917 FWD. POSITION OR PLUG 925 AFT POSITION, GROUP	1	–		
	3919V7909	CABLE, (2F3919), CENTRE PUMP TO ... PLUG 918 FWD. POSITION OR PLUG 926 AFT POSITION, GROUP	1	–		
	3917V7909	CABLE, (F3917), FLOAT SWITCH TO ... TERMINAL BLOCK, GROUP	1	–		
	3918V7909	CABLE, (F3918), REFUELLING VALVE . TO TERMINAL BLOCK, GROUP	1	–		
	3916V7909	CABLE, (F3916), TERMINAL BLOCK TO PLUG 919 FWD. POSITION OR PLUG 927, AFT POSITION, GROUP	1	–		
6A/11872	SMITH'S LJJ72	Cable, connector, fuel contents gauges to .. cable box	2	–	C	HM1/18

LONG RANGE CYLINDRICAL FUEL TANKS IN BOMB BAY (REMOVABLE FITTINGS)

Ref. No.	Part No.	Description (1 2 3 4)	No. off	Matl. Spec.	Cl. of St. M.R.	Plate and Illust'n No.
		ELECTRICAL INSTALLATION CYLINDRICAL TANK (1V13536) (Continued)				
6A/4344737	SMITH'S LJJ92	Cable, connector, cable box to plug 936 fw'd position or plug 938 aft position	1	—	C	HM1/19
	AS8674	Capping duct	2	—		HM1/20
	AS8674/13	Capping, duct, 13" long	1	—	C	HM1/21
	AS8674/18	Capping, duct, 18" long	1	—		HM1/22
	AS8674/20	Capping, duct, 20" long	1	—		HM1/23
	AS8674/29	Capping, duct, 29" long	1	—		HM1/24
	AS8674/30	Capping, duct, 30" long	1	—		HM1/25
	AS4825/24	Capping, duct	1	—		HM1/26
28P/9995929	AS4580/1	Clip, cable	3	—	C	HM1/27
5K/9325186	2SS4657	Clip, cable	1	—	C	HM1/28
26TA/9765	4SS3264	Clip, cable	2	—	C	HM1/29
	6SS4657	Clip, cable	1	—	MR	HM1/30
	9V13536	Clip, special	1	—		HM1/31
	11V13536	Clip, special	2	—		HM1/32
	5V13536	Duct, cable	2	—		HM1/33
	6V13536	Duct, cable	1	—		HM1/34
	7V13536	Duct, cable	1	—		HM1/35
	18SS4622	Duct, cable	1	—		HM1/36
	20SS4622	Duct, cable	1	—		HM1/37
	29SS4622	Duct, cable	1	—	MR	HM1/38
	30SS4622	Duct, cable	1	—		HM1/39
	1538V7728	Label	1	—		HM1/40
5X/4491488	15V5650	Socket, single, three tier	1	—	C	HM1/41
	2V13536	Tube, conduit, 3/8" o/d, 22SWG	1	L54		HM1/42
	3V13536	Tube, conduit, 3/8" o/d, 22G	1	L54		HM1/43
	4V13536	Tube, conduit, 3/8" o/d, 22G	1	L54		HM1/44
1432636	3P3967	Eyebolt	4	S96	C	HM1/45
1432638	2P3967	Nut, special	4	S96	C	HM1/46
17839	16P3918	Pin, shear	4	—	C	HM1/47
1433890	17P3918	Pin, shear	4	—	C	HM1/48
28P/1220820	SP90/G10	Pin, split	8	—	C	
1432634	11P3918	STRUT, FORWARD AT FORWARD TANK, TOP AT AFT TANK, GROUP	2	—	C	HM1/49
		Spares for:—				
	AGS3084	Bearing, end, R.H.	1	—		
	AGS3085	Bearing, end, L.H.	1	—		
28M/9416052	A103/QT	Nut, lock, 5/8" BSF	1	—	C	
28M/9416074	A103/QTL	Nut, lock, 5/8" BSF	1	—	C	
1433002	65P3919	TANK WITH EQUIPMENT (Mod. 2152) GROUP	1	—	A	
		Spares for:—				
	26SS4490	Clip, bonding	1	—	MR	HM1/51

EQUIPMENT SPECIAL OPERATIONAL (S.O.O.)

LONG RANGE CYLINDRICAL FUEL TANKS IN BOMB BAY (REMOVABLE FITTINGS)

Ref. No.	Part No.	Description 1 2 3 4	No. off	Matl. Spec.	Cl. of St. M.R.	Plate and Illust'n No.
		TANK WITH EQUIPMENT (65P3919) (Mod. 2152) (Continued)				
		Spares for:—				
	BG5SS4234	Clip, bonding	3	—		HM1/52
1433990	BG19SS4234	Clip, half	3	—	C	HM1/53
28E/4062141	SP91/M	Clip, hose	4	—	C	HM1/54
27FR/4526669	VICKERS ARMSTRONG A5269 Mk. A	Cock, drain	1	—	A	HM1/55
1432642	43P3919	CUP, FUEL DRIP, GROUP	3	—	C	HM2/56
1432651	8P3919	Gasket, vent pipe	1	DTD762	C	HM1/57
1432643	35P3921	Gasket, float switch	1	DTD762	C	HM1/58
1432641	38P3919	Gasket, fuel pumps	3	DTD762	C	HM2/59
1432694	53P3919	Gasket, refuelling valve	1	DTD762	C	HM1/60
6A/11869	SMITHS 237TA	Gauge, fuel contents, c/w seal (Not supplied with the assembly spare) (65P3919)	1	—	A	HM1/61
6A/11870	SMITHS 238TA	Gauge, fuel contents, c/w seal (Not supplied with the assembly spare) (65P3919)	1	—	A	HM1/62
	42P3919	Hose, rubber, 2-1/2" o/d x 3.0" long	2	DTD625A Type 3		HM1/63
		PIPING, FUEL (18P3919)	—	—		
		Spares for:—				
	14P3919	BRACKET, VALVE MOUNTING, GROUP	1	—		HM2/64
		Spares for:—				
	342SS6000	Label	1	—		
	617SS6000	Label	1	—		
1432649	AQ5SS4234	Clip, half	4	—	C	HM2/65
1432648	AQ10SS4234	Clip, half	2	—	C	HM2/66
1433874	AQ12SS4235	Clip, half	2	—	C	HM2/67
26FP/16223	AS4525/24	Clip, "P"	3	—		HM2/68
	26SS4490	Clip, bonding	21	—	MR	HM2/69
	34SS4490	Clip, bonding	2	—	MR	HM2/70
27FR/2230	FLIGHT REFUELLING FRS110/K	Connector, pipe	11	—	C	HM2/71
	FLIGHT REFUELLING FRS150/M	Connector, pipe	2	—		HM2/72
1432731	51P3919	Gasket, fuel pipes to sump	6	DTD762	C	HM2/73
	5P3474	Piece, distance	3	L72	MR	HM2/74
1432644	11P3919	PIPE, FUEL, NON-RETURN VALVES TO PUMPS, GROUP	3	—	C	HM2/75

LONG RANGE CYLINDRICAL FUEL TANKS IN BOMB BAY (REMOVABLE FITTINGS)

Ref. No.	Part No.	Description 1 2 3 4	No. off	Matl. Spec.	Cl. of St. M.R.	Plate and Illust'n No.
		PIPING, FUEL (18P3919) (Cont'd.)				
1432646	13P3919	PIPE, FLEXIBLE, GROUP	2	—	C	HM2/76
1432647	16P3919	PIPE, FUEL, MANUALLY OPERATED VALVE TO FLEXIBLE PIPE, GROUP ...	1	—	C	HM2/77
1432645	17P3919	PIPE, FUEL, MANUALLY OPERATED VALVE TO NON-RETURN VALVES, GROUP ...	1	—	C	HM2/78
1433591	50P3919	PIPE, FLEXIBLE, TO REFUELLING VALVE, GROUP	1	—	C	HM2/79
27FR/3487	FLIGHT REFUELLING 9807100/3	Valve, non-return (Not supplied with the Assembly Spare) (65P3919) ...	3	—	C	HM2/80
27FS/1444049	SAUNDERS VALVE 116AR60 Mk. 4	Valve, Aero S.P., 2" dia. (Not supplied with Assembly Spare) .	1	—	—	HM2/81
1432650	7P3919	PIPE, VENT, FROM VENT VALVE, GROUP	1	—	C	HM1/82
	40P3919	PIPE, VENT, FORMER 33.125 TO FORMER 22.125, GROUP	1	—	—	HM1/83
	41P3919	Pipe, Vent, Former 22.125 to Former 11.589	1	L56	—	HM1/84
5UE/7518	S.P.E. PAC1200 Mk. 4	Pump, fuel (Not supplied with the Assembly Spare) (65P3919)	3	—	A	HM2/85
	2P3919	Ring, attachment	2	—	—	HM1/86
		STABILISATION OF FLEXIBLE FUEL PIPES (1P3968)	—	—		
		Spares for:—				
	5P3966	BRACKET, SUPPORT, AND PLUG STOWAGE, GROUP	1	—	—	HM2/87
		Spares for:—				
	SMITHS LF14	Plug, stowage	1	—		
	PLESSEY 2Z109909	Plug, stowage	2	—		
	2Z109908	Plug, stowage	1	—		
	11P3967	BRACKET, SUPPORT, PORT, GROUP ...	1	—	MR	HM2/88
	12P3967	BRACKET, SUPPORT, STARBOARD, GROUP ...	1	—	MR	HM2/89
	13P3967	BRACKET, CLIP, PORT, GROUP	1	—	MR	HM2/90
	14P3967	BRACKET, CLIP, STARBOARD, GROUP	1	—	MR	HM2/91
	BA5SS4234	Clip, Fokker	8	—	MR	HM2/92
	BA11SS4234	Clip, Fokker	1	—	—	HM2/93
	BA12SS4234	Clip, Fokker	7	—	—	HM2/94

EQUIPMENT SPECIAL OPERATIONAL (S.O.O.)

LONG RANGE CYLINDRICAL FUEL TANKS IN BOMB BAY (REMOVABLE FITTINGS)

Ref. No.	Part No.	Description 1 2 3 4	No. off	Matl. Spec.	Cl. of St. M.R.	Plate and Illust'n No.
		TANK WITH EQUIPMENT (65P3919) (Mod. 2152) (Continued)				
	11P2831	STOP, VENT VALVE, GROUP	1	—	MR	HM1/95
		STRUCTURE, CYLINDRICAL FUEL TANK (165P3920) (Mod. 2152)	—	—		
	74P3920	BRACKET, ATTACHMENT, FORWARD, STRUT, GROUP	1	—	—	HM1/96
		Spares for:—				
	74bP3920	Block, insert	1	L83		
	106P3920	BRACKET, TRANSPORT LEG MOUNTING, GROUP	2	S510	—	HM2/97
	107P3920	BRACKET, TRANSPORT LEG MOUNTING, GROUP	2	S510	—	HM2/98
1433664	148P3920 or	BRACKET, ATTACHMENT STRUT, STRUT GROUP	2	S510	C	HM2/99
	149P3920	BRACKET, ATTACHMENT STRUT, STRUT, GROUP	2	S510		
		Spares for:—				
	20bP3920	Fork-end	1	L83		
	19P3920	Cover, vent valve	1	L72	—	HM1/100
1432653	44P3920	Gasket, pump and sump pressing	1	DTD762	C	HM2/101
1432656	141P3920	Gasket, vent valve cover	1	DTD762	C	HM1/102
	1P3922	OUTRIGGER, PORT, FORWARD, STARBOARD, AFT, GROUP	2	—	—	HM2/103
	2P3922	OUTRIGGER, STARBOARD, FORWARD PORT, AFT, GROUP	2	—	—	HM2/104
	1P3943	PRESSING, PUMP MOUNTING, GROUP	1	—	—	HM2/105
		Spares for:—				
1432654	4P3943	Adaptor, flanged	1	—	C	HM2/106
27F/4526669	VICKERS ARMSTRONG A5269 Mk. A	Cock, drain	1	—	C	HM2/107
	3P3943	RING, STUD, GROUP	6	—		
		Spares for:—				
1432655	3cP3943	Stud	17	—	C	
28F/9428953	AGS1186/B	Seal, bonded	1	—	C	
28F/9433483	AGS1186/2	Seal, bonded	6	—	C	
	18P3920	TRAY, VENT VALVE MOUNTING, GROUP	1	—	—	HM1/108
5CW/4405248	FLIGHT REFUELLING 3510100/4	Switch, float (Not supplied with assembly spare) (65P3919)	1	—	A	HM1/109
27FR/33324	FLIGHT REFUELLING 114011 Mk. 40	Valve, refuelling (Not supplied with spare) (65P3919)	1	—	A	HM1/110

LONG RANGE CYLINDRICAL FUEL TANKS IN BOMB BAY (REMOVABLE FITTINGS)

Ref. No.	Part No.	Description (1 2 3 4)	No. off	Matl. Spec.	Cl. of St. M.R.	Plate and Illust'n No.
		TANK WITH EQUIPMENT (65P3919) (Mod. 2152) (Continued)				
	15P3012	VALVE, FLOAT (Mod. 1356), GROUP	1	—	MR	HM1/111
		Spares for:—				
	2P3012	Body, valve	1	L59	MR	HM1/112
	4P3012	Float, cork	1	—	MR	HM1/113
	7P3012	Housing, spring	1	L59	MR	HM1/114
	9P3012	Housing, valve	1	L59	MR	HM1/115
	14P3012	Plate, retaining	1	—	MR	HM1/116
1433911	12P3012	Packing, 1/32" thick x 2-3/16" dia.	1	—	C	HM1/119A
	3P3012	Sleeve, float	1	L59	MR	HM1/117
	6P3012	Spring, valve, inward	1	—	MR	HM1/118
	13P3012	Spring, valve, outward	1	—	MR	HM1/119
		VENT SYSTEM, FOR ONE TANK IN FW'D. OR AFT POSITION (14P3918)	—	—		
28E/4710971	SP91/N	Clip, hose	6	—	C	HM2/120
	42SS4490	Clip, bonding	4	—	MR	HM2/121
	12P3376	Hose, rubber, 2-1/2" i/d x 4.0" long	1	DTD625A	—	HM2/122
	26P3375	Hose, rubber, 2-1/2" i/d x 13.5" long	1	DTD625A	—	HM2/123
	27P3375	Hose, rubber, 2-1/2" i/d x 2.75" long	1	DTD625A	—	HM2/124
1432639	15P3918	PIPE, ELBOW, GROUP	1	L54	C	HM2/125
1432640	25P3375	PIPE, ELBOW, GROUP	1	—	C	HM2/126
1432637	5P3918	Washer, special	4	S96	C	HM1/127

EQUIPMENT SPECIAL OPERATIONAL (S.O.O.)

LONG RANGE CYLINDRICAL FUEL TANKS IN BOMB BAY (REMOVABLE FITTINGS)

Ref. No.	Part No.	1 2 3 4	Description	No. off	Matl. Spec.	Cl. of St. / M.R.	Plate and Illust'n No.

EQUIPMENT, SPECIAL OPERATIONAL

SUMMARY OF STANDARD ITEMS

Stores Ref.		No. off	Stores Ref.		No. off	Stores Ref.		No. off
Section	Ref. No.		Section	Ref. No.		Section	Ref. No.	
28D	15405	6	28F	9428450	44	28W	9419401	4
28D	1008149	6	28F	9428453	1	28W	9419402	29
28D	1008151	10	28F	9428953	1	28W	9419404	6
28D	1010030	16	28F	9429636	336	28W	9419405	40
28D	1010658	2	28F	9433483	6	28W	9419446	1
28D	1011019	28				28W	9419454	3
28D	1011021	2				28W	9419474	22
28D	1011238	10	28M	10287	10	28W	9419475	202
28D	1011333	2	28M	10288	153	28W	9419478	4
28D	1017157	6	28M	10290	40	28W	9419481	4
28D	1200119	125	28M	13145	4			
28D	1212679	4	28M	14294	102			
28D	1213592	8	28M	9129449	4			
28D	1213593	8	28M	9416052	1			
28D	1213594	4	28M	9416074	1			
28D	1215659	15						
28D	1215667	3						
28D	1215682	1	28N	18394	8			
28D	1215686	24						
28D	7002428	18						
28D	9133011	9	28P	19129	4			
28D	9133012	109	28P	19157	8			
28D	9133013	10	28P	19234	4			
28D	9140644	18						
28D	9140645	8						
28D	9140647	4	28S	1200049	3			
28D	9140648	2	28S	9419437	2			
28D	9419452	16	28S	9435713	4			
28D	9436920	38						
28E	4062141	4						
28E	19826	6						
28FP	9703069	4						

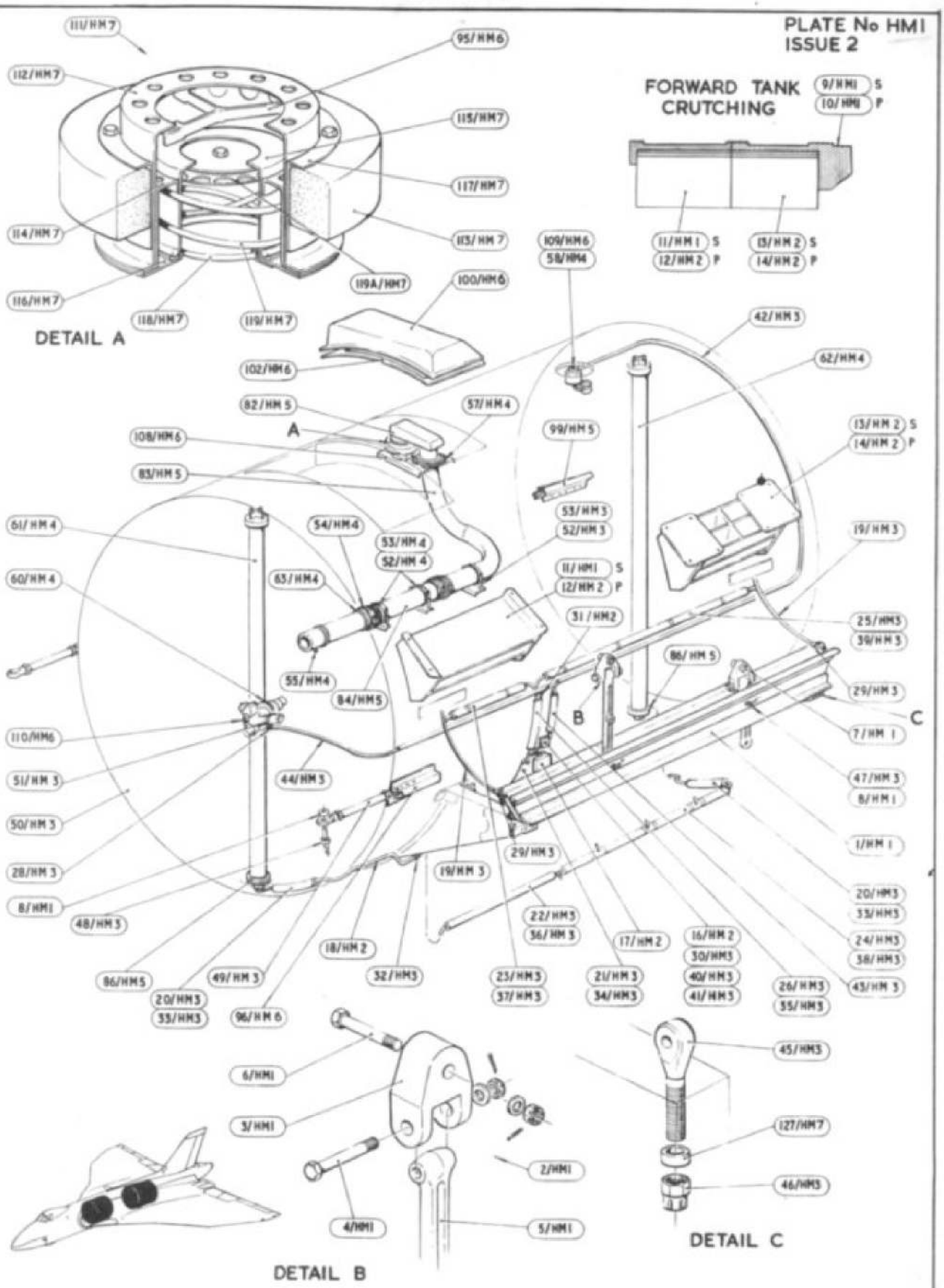

EQUIPMENT SPECIAL OPERATIONAL
LONG RANGE CYLINDRICAL FUEL TANKS IN BOMB BAY
(1)

PLATE No HM2
ISSUE 1

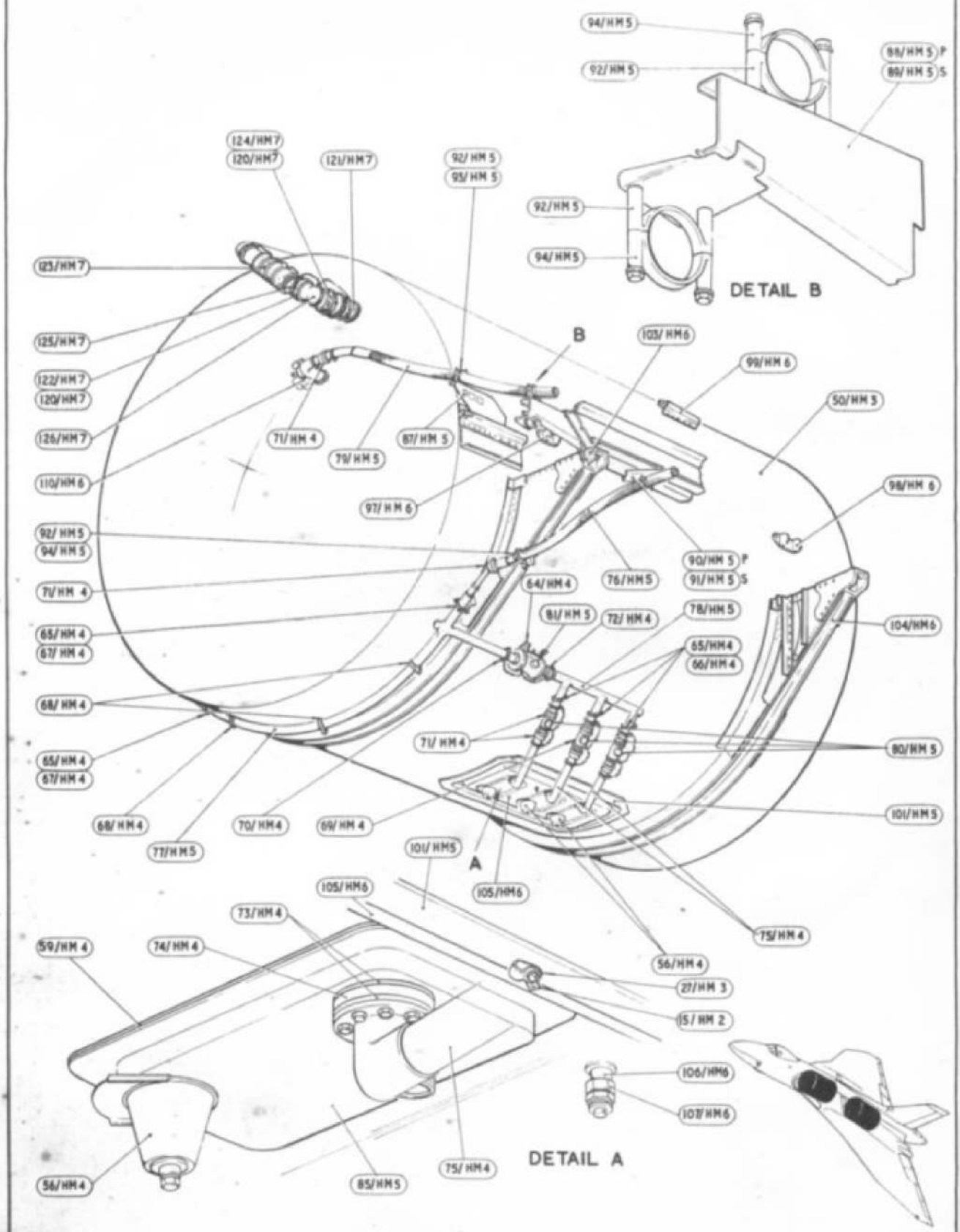

EQUIPMENT SPECIAL OPERATIONAL
LONG RANGE CYLINDRICAL FUEL TANKS IN BOMB BAY
(2)

This file was downloaded
from the RTFM Library.

Link: www.scottbouch.com/rtfm

Please see site for usage terms,
and more aircraft documents.