Ref. No.	Part No.	Description 1 2 3 4	No. off	Matl. Spec.	Cl. of St. / M.R.	Plate and Illust'n No.
		TRESTLING & SLINGING, COMPLETE AIRCRAFT & COMPONENTS				
		Consisting of:–				
	1U1503	BEAM, SLINGING, FOR ROVER A.P.U., GROUP	1	–		KH1/1
		Spares for:–				
	5U1503	Chain, 8" long	4	V15		KH1/2
28FP/4062333	A611	Pin, quick release	2	–	C	KH1/3
28FP/9433677	A619	Pin, quick release	2	–	C	KH1/4
	6U1503	Ring, split, 5/8" dia.	7	Spring Steel		KH1/5
95177	1U1347	BEAM, FOR OUTER WING STEADYING RIB 126.5", GROUP	2	–	A	KH1/6
95091	1U1220	BRACKET, ANCHOR FOR FIXED HOSE PORTION, RADOME SLINGING, GROUP	2	–	A	KH1/7
95156	AT82012	HANDLES, LOCKING BOMB CARRIERS GROUP	2	–	A	KH1/8
95083	1U1170	HOIST, FOR RADAR UNITS, GROUP	1	–	A	KH1/9
		Spares for:				
	5U1170	Bolt, special at pulley, bottom	1	–		KH1/10
	8U1170	Bolt, special	3	–		KH1/11
96197	48U1170	Bracket, bottom of hoist to floor of aircraft (Mod. 1370)	1	–	C	KH1/12
	10U1170	Chain, 9" long	4	V15		KH1/13
	14U1170	Collar	2	MS		KH1/14
	21U1170	Cover, at ratchet mechanism	1	–		KH1/15
	20U1170	Drum, rope	1	DTD364B		KH1/16
	50U1170	HANDLE, GROUP (Mod. Z1370)	1	–		KH1/17
95717	55U1170	HOOK, C/W SPLICED ROPE, GROUP (Mod. 1370)	1	–	C	KH1/18
		Spares for:–				
	37U1170	Hook	1	–		KH1/19
	45U1170	Label, ident	1	L16		KH1/20
	42U1170	Lever, cam	1			KH1/21
	39U1170	Link, swinging bottom pulley	1	DTD124A		KH1/22
	AT30420	Pawl, ratchet mechanism	1	–		KH1/23
95634	15U1170	Piece, end	2	MS	C	KH1/24
	AT30423	Pin, attachment for pawl	1			KH1/25
	18U1170	Pin, special attachment rope drum	1	S96		KH1/26
28FP/9703761	A621	Pin, quick release	1	–		KH1/27
	51U1170	Plate, attachment	1	MS		KH1/28
	38U1170	Pulley, bottom	1	–		KH1/29
	2U1170	RAIL, HOISTING, GROUP	1	–		KH1/30
	9U1170	Ring, split 1/2" dia.	7	V15		KH1/31

GROUND EQUIPMENT

TRESTLING AND SLINGING

Ref. No.	Part No.	Description 1 2 3 4	No. off	Matl. Spec.	Cl. of St. M.R.	Plate and Illust'n No.
		HOIST, FOR RADAR UNITS (1U1170) (Cont'd)				
96198	52U1170	Spacer	2	MS	C	KH1/32
	22U1170	Sprocket for ratchet mechanism	1	–		KH1/33
	AT30422	Spring, ratchet	1	–		KH1/34
95083	13U1170	Tube, 7/8" o/d x 3.875" x 189"	2	MS	C	KH1350
	24U1170	Wheel, pulley, bottom	1	–		KH1/35
	40U1170	Wheel, pulley, top		–		KH1/36
95266	1U1579	HOIST, ENGINE, OLYMPUS 2,500 LBS., GROUP	12	–	A	KH2/37
		Spares for:–				
	2U1579	Adaptor	1	DTD304		KH2/38
	RANSOME MARLES					
2A/9501342	MRJ17	Bearing, roller	2	–	C	KH2/39
	32U1579	Bolt, special, 3/8" BSF	1	S96		KH2/40
	25U1153	Bolt, special, 1/2" BSF	2	S96		KH2/41
	26U1579	Bracket, slinging	1	S96		KH2/42
	15U1579	Chain, 6" long	4	V15		KH2/43
	11U1579	Handle, lifting	1	M5		KH2/44
	4U1579	HOOK, TOP, GROUP	1	–		KH2/45
95705	13U1579	Hook, cable	1	S96	C	KH2/46
	27U1579	Label, "warning"	1	Brass		KH2/47
	1U1290	Label, "capacity"	1	Brass		KH2/48
	9U1384	Label, "warning"	1	L59		KH2/49
	35U1579	Label, handling instructions	1	L59		KH2/50
	33U1579	Nut, special, 3/8" BSF	1	S96		KH2/51
28FP/4062342	A714	Pin, quick release, 7/16" dia.	3	–	C	KH2/52
	30U1579	Plate, swivel, R.H.	1	MS		KH2/53
	31U1579	Plate, swivel, L.H.	1	MS		KH2/54
	9U1579	Plate, side, L.H.	1	MS		KH2/55
	10U1579	Plate, side, R.H.	1	MS		KH2/56
	27U1153	Pulley, top	1	MS		KH2/57
	31U1153	Pulley, bottom	1	MS		KH2/58
	14U1579	Stop, cable	2	MS		KH2/59
	12U1579	Tube, bearing, 11/16" o/d x 2.03" long	1	T45		KH2/60
	7U1579	Tube, spacing, 11/16" o/d x 1.26" long	1	T45		KH2/61
	26U1153	Tube, extension, 2" o/d x 2.0" long	1	T45		KH2/62
	3U1579	TUBE, MAIN, GROUP	1			KH2/63
	34U1153	Washer, special, 2.25" dia.	2	–		
	25SS3703	Washer, saddle	2	MS		
	26SS3703	Washer, saddle	2	MS		
	28SS3703	Washer, saddle	2	MS		
	1U1580	WINCH, 2,500 LB., GROUP	1	–		KH2/64
		Spares for:–				
	RANSOME & MARLES					
	MJT/1	Bearing, dual purpose	2	–		KH2/65

Ref. No.	Part No.	Description (1 2 3 4)	No. off	Matl. Spec.	Cl. of St. M.R.	Plate and Illust'n No.
		WINCH 2,500 LBS. (1U1580) (Cont'd.)				
	33U1580	BOX, GEAR, GROUP	1	—		KH2/66
	4U1385	Cover	1	L72 or L73		KH2/67
	37U1157	Bush	1	Phosphor Bronze		KH2/68
	38U1580	Bush, special (Mod. 1293)	1	S94		KH2/69
	30U1580	Bush	1	T35		KH2/70
	35U1580	CABLE, GROUP	1	—		KH2/71
	2U1580	Casing, drum half	1	L53 or DTD304		KH2/72
	3U1580	Casing, warm half	1	L53 or DTD304		KH2/73
	39U1580	Clutch, forward (Mod. 1293)	1	S82		KH2/74
	33U1157	Cog, clutch	1	S82		KH2/75
	19U1580	Cover	1	MS		KH2/76
	13U1580	HANDLE, WINDING, GROUP	1	—		KH2/77
		Spares for:—				
	41U1157	Block, forward	1	—		KH2/78
	1U1305	Handle	1	—		KH2/79
	46U1157	Screw, adjusting 1/2" BSF	1	S96		KH2/80
	16U1580	Handle, holding	1	—		KH2/81
	RANSOME & MARLES					
2A/9501181	KLNJ1	Journal, ball at clutch cog	2	—	C	KH2/82
2A/9501182	KLNJ/-1/4"	Journal, ball at gear box	1	—	C	KH2/83
2A/9501180	KLNJ/-7/8"	Journal, ball, forward of gearbox	1	—	C	KH2/84
	28U1580	LEVER, CAM, GROUP	1	—		KH2/85
	TECALEMIT					
96241	NA5702/1	Nipple, grease	6	—	C	KH2/86
	20U1580	Pawl, gear box	1	S82		KH2/87
	6U1385	Pinion, fixed	1	S96		KH2/88
	7U1385	PINION, FREE, GROUP	1	—		KH2/89
		Spares for:—				
	7b1385	Bush	1	—		KH2/90
	7a1385	Pinion	1	—		KH2/90
	38U1157	Plate, cover	1	MS		KH2/91
	39U1157	Plate, bearing	1	Phosphor Bronze		KH2/92
28S/1246730	A55/C5	Screw, grub (Mod. 1293)	1	MS	C	KH2/93
	8U1385	Shaft, clutch	1	S96		KH2/94
	17U1580	Spindle	1	S96		KH2/95
	22U1157	Spring, clutch	1	Spring Steel		KH2/96
	44U1157	Washer, spacer for ratchet wheel	1	MS		KH2/97
	43U1157	Washer, tab	1	MS		KH2/98
	34U1580	Washer, spacer 1.37" dia.	1	MS		KH2/99
	5U1385	Wheel, gear	1	S96		KH2/100

Ref. No.	Part No.	Description (1 2 3 4)	No. off	Matl. Spec.	Cl. of St. M.R.	Plate and Illust'n No.
		WINCH, 2,500 LB (1U1580) (Cont'd.)				
	4U1580	WHEEL, WORM, GROUP	1	—		KH2/101
		Spares for:—				
	5U1580	Body, cable drum	1	L53		KH2/102
	36U1580	Bolt, special, 3/8" BSF	5	S94 or S95		KH2/103
95701	8U1580	Cable	1	—	C	KH2/104
	6U1580	Drum, cable	1	EN3A		KH2/105
	10U1580	Ring, felt 2.9 1/2" x 7/16" x 7/32" thick	1	Soft Felt		KH2/106
28W/9419466	SP13/J	Washer, 3/8" BSF	5	—	C	
	7U1580	Wheel, worm	1	BS1208/5		KH2/107
	12U1335	WORM, GROUP	1	—		KH2/108
		Spares for:—				
	2U1335	Worm	1	—		
2A/9501243	HOFFMANN LS8	Journal, ball	1	—	C	
	RANSOME & MARLES LT—B7/8"	Page, single thrust	1	—		
4G/5967	—	HOSE ASSEMBLIES (USE WITH JACK, REF. 26DC/95090)	1	—		
95090	AT81559	JACK, HYDRAULIC, TWO STAGE FOR BOMB HOISTING, GROUP	2	—	A	KH2/109
		Spares for:—				
96092	AT37253	Adaptor, hoisting	1	S96 or S82		KH3/110
	AT37150	Bolt, special banjo, 3/8" BSP	1	S1		KH3/111
28F/9423229	C/AG5/1135	Bolt, banjo	1	—		KH3/112
	AT38588	Cap, end, small stage	1	L65		KH3/113
	AT37133	Clip, retaining	3	—	MR	KH3/114
	AT37134	Clip, retaining	3	—	MR	KH3/115
	AT37151	Clip, special, banjo, 3/8" BSP	1	DTD364B		KH3/116
	AT63003	GUARD, PIPE, GROUP	1	—	MR	KH3/117
	AT40022	Label, ident	1	Brass		
	AT62965	PIECE, BASE, GROUP	1	—		KH3/118
		Spares for:—				
5989	AT38516	Adaptor	2	L65		
	LOCKHEED AVA63C	Cap, blanking	1	—		
	AVA64C	Cap, blanking	1	—		
	AVA57C	Coupling, union half	1	—		
	AVA59C	Coupling, stud, half	1	—		
1433137	LOCKHEED KL44526	Gasket	1	—	C	
1433136	KL44516	Gasket	2	—	C	
27M/10764	LOCKHEED AS3357	Gasket	2	—	C	

Ref. No.	Part No.	Description 1 2 3 4	No. off	Matl. Spec.	Cl. of St. M.R.	Plate and Illust'n No.
		PIECE, BASE (AT62865) (Cont'd)				
	LOCKHEED KL44530	Gasket	1	—		
	LOCKHEED 2376/4	Gasket	1	—		
	LOCKHEED HC15219/4	Nut, cap	1	—		
	LOCKHEED K18711	Nut, lock	1	—		
	LOCKHEED AVA65C	Nut, union	1	—		
	AT39506	Plug, special, made from H.C.42930/4	1	—		
	LOCKHEED HC19698/4	Plug, large	1	—		
	AT39507	Plug, 3/8" BSP o/d x 0.65" long	1	S96		
	AT39508	Plug, test	1	S96		
	LOCKHEED AS4553	Plunger	1	—		
	LOCKHEED HC19703/4	Plunger, and sleeve (supplied together)	1	—		
	LOCKHEED AS3356	Retainer, spring	1	—		
	AT38514	Screw, special	2	S96		
	LOCKHEED HC18578/4	Screw, adjusting	1	—		
1432741	LOCKHEED HC26039/4	Seal	1	—	C	
1432742	LOCKHEED HC25190/4	Seal	1	—	C	
1432744	LOCKHEED HC28542/4	Seal	2	—	C	
1432743	LOCKHEED HC28541/4	Seal	1	—	C	
	LOCKHEED AS3353	Sleeve	1	—		
	LOCKHEED 10245/4	Spring	1	—		
	LOCKHEED AS4554	Spring	1	—		
	LOCKHEED HC2396/4	Spring	1	—		
96189	LOCKHEED HC26171/4	Valve	1	—		
	AT62037	Piece, end, 6" dia. x 8.94" long	1	DTD363A or DTD364B		KH3/119
	AT62035	Piston, large stage, 4.87" dia. x 3.1"	1	DTD363A or DTD364B		KH3/120
	AT62034	Piston, samll stage, 3.43" dia. x 2.85"	1	DTD363A or DTD364E		KH3/121
	2AT81559	PIPE, C/W BANJO BODY, GROUP	1	—		KH3/122

Ref. No.	Part No.	Description 1 2 3 4	No. off	Mstl. Spec.	Cl. of St. M.R.	Plate and Illust'n No.
		JACK, HYDRAULIC, TWO STAGE, FOR BOMB HOISTING (AT81559) (Cont'd)				
	AT37123	Ring, spacer, large 4.43" dia. x .4"	1	DTD363A		
	AT37120	Ring, seal retaining, 4.87" dia. x 1.09"	1	DTD363A		
	AT37122	Ring, seal spacer, small 1.7" dia. x 0.3"	1	DTD363A		
	AT37065	Ring, seal retaining 1.12" dia. x .16"	1	DTD363A		
	AT37121	Ring, steadying .75" dia. x .75"	1	DTD363A		
	AT37119	Ring, locking 5.12" dia. x 20 SWG	1	S3	C	
	AT38559	Ring, locking 3.75" x .15" thick	1	L65		
	AT37052	Ring, piston sealing	2	DTD458A	MR	
95275	AT37053	Ring, piston sealing	2	DTD458A	C	
	DOWTY					
27QA/4534376	GD1143	Ring, piston sealing	2	–	C	
	AT37050	Ring, piston, GD1139	4	BSS2K11	MR	
	AT37051	Ring, piston, GD1140	4	BSS2K11	MR	
	AT37066	Ring, piston, external GD1148	4	BSS2K11	MR	
	AT37051	Ring, spacing, .75" dia, x .31"	1	DTD363A		
	AT37118	Ring, end, 6" dia. x 1.25"	1	S82		
	AT62039	Rod, piston, small stage, 1.25" o/d x 3/4" i/d x 4' .095" long	1	T45		
	AT62040	Rod, piston, large stage 3.75" o/d x 8 SWG x 4' 1.67" long	1	T45		
	AT37335	Screw, special, attachment inner tube assembly	1	S1		
	AT37153	Screw, special, 2 BA made from A25/1C	6	–		
	DOWTY					
27QA/4534641	GD1144	Seal, "O" type	2	DTD458A	C	
	DOWTY					
27QA/4534644	GD1185	Seal, "O" type	1	DTD458A	C	
	DOWTY					
27QA/542	GD1179	Seal, "O" type	1	DTD458A	C	
	DOWTY					
27QA/1557	GD1184	Seal, "O" type	1	DTD458A		
	DOWTY					
27QA/4534642	GD1146	Seal, "O" type	1	DTD458A	C	
	DOWTY					
27QA/4534489	SP900-41	Seal, "O" type	1	–	C	
	DOWTY					
27QA/4534713	GD1147	Seal, "U" type	1	DTD458A		
	DOWTY					
	5400/25DFL	Seal, "U" type	1	DTD458A		
	AT37940	Strip, locking	1	S3	MR	
	AT62038	TUBE, INNER, GROUP	1	–		
95357	1U1585	LINK, SLING, FOR SUNSTRAND ALTERNATOR, GROUP	1	–	A	KH3/123
		Consisting of:–				
	3U1585	Chain, 6" long	1	V15		KH3/124
	1U1586	Label, ident	1	Brass		KH3/125
	2U1585	Link	1	–		KH3/126
28FP/9432063	A413	Pin, quick release, 1/4" dia.	1	–	C	KH3/127
	4U1585	Ring, split, 3/4" dia.	2	–		KH3/128

Ref. No.	Part No.	Description 1 2 3 4	No. off	Matl. Spec.	Cl.of St. M.R.	Plate and Illust'n No.
		MINILIFT EQUIPMENT				
		Consisting of:—				
95374	1U1613	Adaptor, head, use with 4G/5703 R.C.M. installation	1	—	A	KH3/129
95394	1U1625	Adaptor, head (use with 4G/5699)	1	—	A	KH3/130
95395	1U1626	Adaptor, special	1	—	C	KH3/131
	1U2038	Adaptor, hoisting top Fin, S.O.O. (Mod. 1816)	1	—		KH3/132
	DIDSBURY					
4GC/1368993	41/136	Ball, cable end	2	—	C	
4GC/4232337	41/63	Handle, switch 9"	2	—	B	
4GC/4253489	25/63	Hoist, aircraft components, 2K/63	1	—	A	
4GC/4232219	41/5	Hoist, aircraft components 250 or 280 lbs.	1	—	A	
4GC/1043793	42/1	Hoist, aircraft components 5 cwt	1	—	A	
4GC/1042863	41/76	Hook, cable winch	2	—	B	
4GC/4232220	41/63	Sheath, top (Type No. 1) hook 2.5 cwt.	1	—	B	
4GC/1046578	42/27	Sheath, top (Type No. 1) hook 5 cwt.	1	—	B	
4GC/1369389	42/50	Sheath, top, for A.A.P.U. and windows	1	—	B	
4GC/4232207	41/110	Sleeve, connecting extension tube	2	—	B	
4GC/4232204	—	Tube, extension 36"	2	—	B	
4GC/4232210	41/105	Tube, extension 84"	2	—	B	
		For Radome Hoisting use items:— 4GC/4232337, 4232204, 4232210, 1368993, 4232207, 4253489, 5428 —2 off each				
		For H.R.S. Scanner use items:— 4GC/4232337, 4232204, 4232210, 5429, 4232207, 4253489, 5428—2 off each				
		For Green Satin use items:— 4GC/4232337, 4232210, 1368993, 4253489, 5428—1 off each				
		For Air Conditioning Unit use items:— 4GC/4232337, 4232210, 1368993, 4253489, 5428—2 off each				
		For Rudder P.C.U. use items:— 4GC/4232337, 4232210—1 off each				
		For Windows Lounching use items:— 4GC/1043793, 4232337, 4232210, 1368993, 6036—2 off each				
		For Bomb Bay Doors use items:— 4GC/1043793, 4232337, 4232210, 5736, 5429—2 off each				
		For Rover A.A.P.U. use items:— 4GC/1043793, 4232337, 4232210, 1368993, 6036—1 off each				

Ref. No.	Part No.	Description (1 2 3 4)	No. off	Matl. Spec.	Cl. of St. M.R.	Plate and Illust'n No.
		MINILIFT EQUIPMENT (Cont'd)				
		For Lucas Fuel Chassis use items:— 4GC/4232204, 1U1626—1 off each				
		For R.C.M. use items:— 4GC/1043793, 4232204 and 1U1613—1 off each				
4GA/4409698 or 4GA/4409699	—	POWER PACK BOMB HOISTING, GROUP	1	—	A	
95007	1U1063	SLING FOR CREW'S NACELLE, GROUP	1	—	A	KH3/133
		Spares for:—				
	2U1063	Bar, spreader	1	—		KH3/134
28D/1213699	A25/20S	Bolt, 3/8" BSF	2	—	C	KH3/135
	12U1063	Bolt, eye, control	2	S96		KH3/136
	5U1063	CABLE, FRONT, GROUP	1	—		KH3/137
	6U1063	CABLE, REAR, GROUP	1	—		KH3/138
	ASTON CHAIN					
	9U1063	Chain, 8" long	2	—		KH3/139
28M/4043777	AGS899/18	Collar	6	—	C	KH3/140
	7U1063	Head, lifting	1	MS		KH3/141
	1U1005	Valve, identity	1	Brass		
	4U1063	Link, bar attachment	4	MS		KH3/142
	3U1063	Link, component attachment	2	MS		KH3/143
28M/4095935	A27/SS	Nut, 3/4" BSF cable attachment	2	—	C	
28FP/9703070	A815	Pin, quick release	2	—	C	KH3/144
28P/4670267	SP4Y/M18	Pin, shackle 1/2" dia.	4	—	C	KH3/145
28P/1018002	SP4Y/M19	Pin, shackle 1/2" dia.	2	—	C	KH3/146
28P/19402	SP90/H6	Pin, split	2	—	C	KH3/147
	10U/1063	Ring, split	2	MS		KH3/148
	11U1063	Washer, special, 15/16" o/d	4	MS		KH3/149
95391	1U1621	SLING, FOR REAR FUSELAGE E.C.M.	1	—	A	KH3/150
		Spares for:—				
	12U1621	Bar, spreader	1	—		KH3/505
	5U1621	Bar, spreader, end	1	—		KH3/506
	11U1621	Bar, spreader, bottom	1	—		KH3/507
28D/1213639	A25/45H	Bolt	2	—	C	KH3/508
	7U1621	CABLE, GROUP	1	—		KH3/509
	13U1621	Eye, lifting	2	—		KH3/510
	U1290	Label	1	—	C	KH3/511
28M/1011477	A27ND	Nut	2	—	C	KH3/512
28W/9419468	SP13/N	Washer	2	—	C	KH3/513

Ref. No.	Part No.	Description 1 2 3 4	No. off	Matl. Spec.	Cl. of St. M.R.	Plate and Illust'n No.
95183	1U1348	SLING, FOR CENTRE PORTION FUSELAGE, PORT AND STARBOARD Consisting of:—	2	—	A	KH3/151
	2U1139	Bar, spreader	1	—		KH3/152
	8U1065	Bobbin, upper	2	Mild Steel		KH3/153
	9U1065	Bobbin, lower	2	Mild Steel		KH3/154
	3U1348	CABLE, FROM LIFTING HEAD TO SPREADER BAR, FORWARD, GROUP	1	—		KH3/155
	4U1348	CABLE, FROM LIFTING HEAD TO SPREADER BAR, AFT, GROUP	1	—		KH3/156
	6U1065	Cable, spreader bar to component, forward	1	—		KH3/157
	7U1065	Cable, spreader bar to component, aft	1	—		KH3/158
28N/4043777	AGS899/18	Collar, 3/4" i/d x .37" long	4	—	C	KH3/159
28N/4043778	AGS899/15	Collar, 5/8" i/d x .37" long	4	—	C	KH3/160
	11U1348	Chain, 8" long	2	—		KH3/161
	2U1348	Head, lifting	1	—		KH3/162
	3U1139	Link, forward	2	Mild Steel		KH3/163
	10U1139	Link, aft	2	Mild Steel		KH3/164
	5U1348	Pin, special, attachment cable to lifting head	2	S98		KH3/165
	6U1348	Pin, special, attachment cable to spreader bar, lower	2	S98		KH3/166
	7U1348	Pin, special, attachment cable to link	2	—		KH3/167
	8U1348	Pin, special, attachment cable to spreader bar, upper	2	—		KH3/168
28P/1221024	SP90/H10	Pin, split, 5/32" dia. x 1-1/4" long	8	—	C	KH3/169
	9U1348	PIN, QUICK RELEASE, GROUP	2	—		KH3/170
	4U1139	Plate, lifting	1	Mild Steel		KH3/171
	12U1348	Ring, split, 1/2" dia. 22 swg	1	—		KH3/172
	14U1065	Tag	2	Brass		KH3/173

GROUND EQUIPMENT

TRESTLING AND SLINGING

Ref. No.	Part No.	Description (1 2 3 4)	No. off	Matl. Spec.	Cl. of St. / M.R.	Plate and Illust'n No.
95292	1U1501	SLING FOR INNER MAINPLANE, ALSO USED WITH ITEM 1U1502 FOR LIFTING COMPLETE MAINPLANE, GROUP	1	–	A	KH4/174
		Consisting of:–				
	2U1501	BAR, SPREADER, GROUP	1	–		KH4/175
	9U1066	Block, 2.5" x 2.5" x 5.125"	1	Mild Steel		KH4/176
	9U1501	Bolt, eye	2	Mild Steel		KH4/177
28D/1212761	A25/32J	Bolt, 3/8" BSF	8	–	C	KH4/178
28D/1213686	A25/32Q	Bolt, 5/8" BSF	1	–	C	KH4/179
28D/1213687	A25/35Q	Bolt, 5/8" BSF	1	–	C	KH4/180
	7U1501	Cable, front	1	–		KH4/181
	8U1501	Cable, rear	1	–		KH4/182
	13U1501	Chain, 8" long	2	V9		KH4/183
28N/4043777	AGS899/18	Collar, 3/4" i/d	2	–	C	KH4/184
	3U1501	Head, lifting, R.H.	1	–		KH4/185
	4U1501	Head, lifting, L.H.	1	–		KH4/186
	15U1501	Head, auxiliary lifting	1	–		KH4/187
	10U1501	Label, ident.	1	L59		KH4/188
	1U1290	Label, capacity	1	–		KH4/189
28M/1011476	A27/JS	Nut, slotted, 3/8" BSF	8	–	C	KH4/190
28M/4095885	A27/QS	Nut, slotted, 5/8" BSF	2	–	C	KH4/191
28P/9527619	SP90/C7	Pin, split, 1/16" dia. x 1" long	8	–	C	KH4/192
28P/9534222	SP90/H7	Pin, split, 5/32" dia. x 1-1/4" long	2	–	C	KH4/193
28P/1202570	SP90/G10	Pin, split, 1/8" dia. x 1-1/2" long	2	–	C	KH4/194
28FP/4062350	A1015	Pin, quick release	2	–	C	KH4/195
	SP4/U22	Pin, shackle, 3/4" dia.	2	–		KH4/196
	14U1501	Ring, split, 1/2" dia., 20 swg	4	–		KH4/197
	1U1502	SLING, FOR OUTER MAINPLANE, ALSO USED WITH 1U1501 FOR LIFTING COMPLETE MAINPLANE, GROUP	1	–		KH4/198
		Consisting of:–				
	2U1502	BAR, SPREADER, GROUP	1	–		KH5/199
	9U1066	Block, 2.5" x 2.5" x 4.125"	1	Mild Steel		KH5/200
	14U1066	Bolt, eye	2	–		KH5/201a
28D/1212761	A25/32J	Bolt, 3/8" BSF	8	–	C	KH5/201
28D/1213686	A25/32Q	Bolt, 5/8" BSF	1	–	C	KH5/201b
28D/1213687	A25/35Q	Bolt, 5/8" BSF	1	–	C	KH5/201c
	6U/1502	Cable, front	1	–		KH5/202
	7U1502	Cable, rear	1	–		KH5/203
	10U1502	Chain, 8" long	2	V9		KH5/204
28N/4043777	AGS899/18	Collar, 3/4" i/d	2	–	C	KH5/204a
	3U1502	Head, lifting	2	–		KH5/205
	4U1502	Head, auxiliary lifting	1	–		KH5/206
	5U1502	Label, ident	1	L59		KH5/207
	1U1290	Label, capacity	1	Brass		KH5/208

Ref. No.	Part No.	Description 1 2 3 4	No. off	Matl. Spec.	Cl. of St. M.R.	Plate and Illust'n No.
		SLING, FOR OUTER MAINPLANE, ALSO USED WITH 1U1501 FOR LIFTING COMPLETE MAINPLANE (1U1502) (Cont'd.)				
28M/1011476	A27/JS	Nut, slotted, 3/8" BSF	8	–	C	KH5/209
28M/13145	A27/QS	Nut, slotted, 5/8" BSF	2	–	C	KH5/210
28P/9527619	SP90/C7	Pin, split, 1/16" dia. x 1" long	8	–	C	KH5/211
28P/19175	SP90/G10	Pin, split, 1/8" dia. x 1.5" long	2	–	C	KH5/212
28P/9534222	SP90/H7	Pin, split, 5/32" dia. x 1.25" long	2	–	C	KH5/213
	SP4/U21	Pin, shackle, 3/4" dia. x 1.5" long	2	–		KH5/214
28FP/4062350	A1015	Pin, quick release	2	–	C	KH5/215
	11U1502	Ring, split, 1/2" dia.	4	–		KH5/216
95184	1U1350	SLING, OUTER, FOR INNER MAINPLANE, GROUP	1	–	A	KH5/217
		Consisting of:–				
	2U1350	BAR, SPREADER, GROUP	1	–		KH5/218
	9U1066	Block, 2.5" x 2.5" x 5.125"	1	Mild Steel		KH5/219
	14U1066	Bolt, eye	2	–		KH5/220
28D/1212761	A25/32J	Bolt, 3/8" BSF	8	–	C	KH5/221
28D/1213686	A25/32Q	Bolt, 5/8" BSF	1	–	C	KH5/222
28D/1213687	A25/35Q	Bolt, 5/8" BSF	1	–	C	KH5/223
	4U/1530	Cable, front	1	–		KH5/224
	5U1350	Cable, rear	1	–		KH5/225
	8U1350	Chain, 8" long	2	V15		KH5/226
28N/4043777	AGS899/18	Collar, 3/4" i/d	2	–	C	KH5/227
	3U1350	Head, lifting	2	Mild Steel		KH5/228
	8U1066	Head, auxiliary lifting	1	Mild Steel		KH5/229
	4U1350	Label, ident	1	L59		KH5/230
	1U1290	Label, capacity	1	Brass		KH5/231
28M/1011746	A27/JS	Nut, 3/8" BSF	8	–	C	KH5/232
28M/13145	A27/QS	Nut, 5/8" BSF	2	–	C	KH5/233
28P/9527619	SP90/C7	Pin, split, 1/16" dia. x 1" long	8	–	C	KH5/234
28P/19175	SP90/G10	Pin, split, 1/8" dia. x 1.5" long	2	–	C	KH5/235
28P/9534222	SP90/H7	Pin, split, 5/32" dia. x 1.25" long	2	–	C	KH5/236
28FP/4062350	A1015	Pin, quick release	2	–	C	KH5/237
28P/	SP4/U21	Pin, shackle, 3/4" dia. x 1.5" long	2	–		KH5/238
	9U1350	Ring, split, 1/2" dia.	4	–		KH5/239
95291	1U1530	SLING, INNER, FOR OUTER MAINPLANE, GROUP	1	–	A	KH4/240
		Consisting of:–				
	2U1530	BAR, SPREADER, GROUP	–	–		KH4/241
	9U1066	Block, 2.5" x 2.5" x 5.125"	1	Mild Steel		KH4/242
	14U1066	Bolt, eye	2	–		KH4/243
28D/1212761	A25/32J	Bolt, 3/8" BSF	8	–	C	KH4/244
28D/1213686	A25/32Q	Bolt, 5/8" BSF	1	–		KH4/245
	4U1530	Cable, front	1	–		KH4/246
	5U1530	Cable, rear	1	–		KH4/247

GROUND EQUIPMENT

TRESTLING AND SLINGING

Ref. No.	Part No.	Description 1 2 3 4	No. off	Matl. Spec.	Cl. of St. M.R.	Plate and Illust'n No.
		SLING, INNER, FOR OUTER MAINPLANE (1U1530) (Cont'd.)				
	10U1530	Chain, 8" long	2	V15		KH4/248
28N/4043777	AGS899/18	Collar, 3/4" i/d	2	—	C	KH4/249
	6U1530	Head, lifting, R.H.	1	Mild Steel		KH4/250
	7U1530	Head, lifting, L.H.	1	Mild Steel		KH4/251
	4U1502	Head, auxiliary lifting	1	—		KH4/252
	3U1530	Label, ident	1	L59		KH4/253
	1U1290	Label, capacity	1	Brass		KH4/254
28M/1011476	A27/JS	Nut, 3/8" BSF	8	—	C	KH4/255
28M/13145	A27/QS	Nut, 5/8" BSF	1	—	C	KH4/256
28P/9527619	SP90/C7	Pin, split, 1/16" dia. x 1" long	8	—	C	KH4/257
28P/19175	SP90/G10	Pin, split, 1/8" dia. x 1.5" long	1	—	C	KH4/258
28P/9534222	SP90/H7	Pin, split, 5/32" dia. x 1.25" long	1	—	C	KH4/259
	SP4/U21	Pin, shackle, 3/4" dia. x 1.5" dia.	1	—		KH4/260
28FP/4062350	A1015	Pin, quick release	2	—	C	KH4/261
	11U1530	Ring, split, 1/2" dia.	4	—		KH4/262
95290	1U1531	SLING, TOP, FOR OUTER MAINPLANE, GROUP	1	—	A	KH4/263
		Consisting of:—				
	8U1531	Bar, spreader	1	—		KH5/264
28D/1212752	A25/12J	Bolt, 3/8" BSF	12	—	C	KH5/265
28D/1011305	A25/20J	Bolt, 3/8" BSF	2	—	C	KH5/266
28D/1213636	A25/38N	Bolt, 1/2" BSF	6	—	C	KH5/267
28D/9133208	A25/20E	Bolt, 1/4" BSF	2	—	C	KH5/268
	13U1531	Chain, 10" long	4	V9		KH5/269
	6U1531	Collar, 2" o/d x 1.5" i/d	2	Mild Steel		KH5/270
	3U1531	Fitting, forked end	2	Mild Steel		KH5/271
	2U1531	Head, lifting	1	—		KH5/272
	5U1531	Link, forked	2	Mild Steel		KH5/273
	15U1531	Label, ident	1	L4		KH5/274
	1U1290	Label, capacity	1	—		KH5/275
28M/13123	A27/JS	Nut, slotted, 3/8" BSF	14	—	C	KH5/276
28M/13259	A27/NS	Nut, slotted, 1/2" BSF	6	—	C	KH5/277
28M/1011467	A27/ES	Nut, slotted, 1/4" BSF	2	—	C	KH5/278
28P/9560929	SP90/E8	Pin, split, 3/32" dia. x 1-1/4" long	6	—	C	KH5/279
28P/9527619	SP90/C7	Pin, split, 1/16" dia. x 1" long	16	—	C	KH5/280
28FP/4062333	A611	Pin, quick release	2	—	C	KH5/281
	7U1531	PIN, QUICK RELEASE, GROUP	2	—		KH5/282
	4U1531	Pin, handling	2	Mild Steel		KH5/283
	14U1531	Ring, split, 1-1/2" dia.	3	—		KH5/284
28W/9419468	SP13/N	Washer, 1/2" BSF	6	—	C	KH5/285
28W/9419466	SP13/J	Washer, 3/8" BSF	12	—	C	KH5/286
	11U1531	Washer, tab	4	—		KH5/287

Ref. No.	Part No.	Description 1 2 3 4	No. off	Matl. Spec.	Cl. of St. / M.R.	Plate and Illust'n No.
95011	1U1068	SLING, FOR FIN, GROUP	1	–	A	KH6/288
		Consisting of:–				
	2U1068	Bar, spreader	1	–		KH6/289
95640	12U1068	Bolt, eye	2	S96	C	KH6/290
	9U1068	Chain, 6" long	2	V9		KH6/291
28N/9153393	AGS899/4	Collar, 1/4" i/d	4	–	C	KH6/292
	4U1068	Cable, R.H. and L.H. 8' 3" long	2	–		KH6/293
	6U1068	Felt, 3/4" wide x 3/16" thick x 8" long	2	–		KH6/294
	1U1005	Label, ident	1	Brass		KH6/295
	3U1068	Link, 1/8" x 1" x 3"	4	Mild Steel		KH6/296
28P/19327	SP90/C6	Pin, split, 1/16" dia. x 3/4" long	4	–	C	KH6/297
28P/4666790	SP4Y/D7	Pin, shackle, 1/4" dia. x 0.55" long	4	–	C	KH6/298
	8U1068	Pin, pip	1	–		KH6/299
	10U1068	Ring, split, 1/2" dia.	4	–		KH6/300
	11U1068	Ring, split, 1-1/4" dia.	1	Brass		KH6/301
	7U1068	Thread, 3/25S or 3/35S	QR	F34		KH6/302
28Y/4677711	AGS136/C	Thimble, .21" dia. groove	4	Brass	C	KH6/303
	5U1068	Wire, binding, 18 SWG	QR	Copper		KH6/304
1510098	1U2232	SLING, FOR RUDDER, GROUP (Mod. 2315)	1	–	A	KH6/305
		Consisting of:–				
	3U2232	Bar, lifting, 1" dia. x 3' 5" long	1	S96		KH6/306
	10U1069	Bolt, eye, 1-1/8" dia. x 2-5/8" long	2	S96		KH6/307
	5U2232	Cable, R.H. and L.H.	2	–		KH6/308
	6U2232	Chain, 8" long	4	V9		KH6/309
28N/9153393	AGS899/4	Collar, 1/4" i/d	4	–	C	KH6/310
	2U2232	HEAD, LIFTING, GROUP	1	–		KH6/311
	1U1290	Label, ident	1	Brass		KH6/312
	3U1068	Link, 1/8" x 1" x 3"	4	Mild Steel		KH6/313
	6U1069	Lug, attachment	2	Brass		KH6/314
28P/1015710	SP4Y/D8	Pin, shackle, 1/4" dia. x 0.006" long	2	–	C	KH6/315
28P/1208472	SP4Y/D13	Pin, shackle, 1/4" dia. x 0.85" long	2	–	C	KH6/316
28P/9486478	SP90/C5	Pin, split, 1/16" dia. x 5/8" long	4	–	C	KH6/317
28FP/9469299	A409	Pin, quick release	2	–	C	KH6/318
	7U2232	Ring, split, 3/4" dia.	7	Brass		KH6/319
	4U2232	Tube, distance, bottom R.H. and L.H.	1	–		KH6/320
95185	1U1351	SLING, LIFTING, ELEVATOR, INBOARD, GROUP	1	–	A	KH7/321
		Consisting of:–				
	2U1072	Bar, spreader	1	–		KH7/322
95640	12U1068	Bolt, eye	2	S96	C	KH7/323
	12U1351	CABLE, INBOARD, GROUP	1	–		KH7/324
	13U1351	CABLE, OUTBOARD, GROUP	1	–		KH7/325
	7U1351	Chain, 8" long	2	V15		KH7/326
	3U1352	Head, lifting	1	Mild Steel		KH7/327
	1U1290	Label, capacity	1	Brass		KH7/328

GROUND EQUIPMENT

TRESTLING AND SLINGING

Ref. No.	Part No.	Description 1 2 3 4	No. off	Matl. Spec.	Cl. of St. M.R.	Plate and Illust'n No.
		SLING, LIFTING, ELEVATOR, INBOARD (1U1351) (Cont'd)				
28FP/9713920	A411	Pin, quick release	2	–	C	KH7/329
28P/4668901	SP4Y/G8	Pin, shackle, 11/16" dia. x 0.60" long	4	–	C	KH7/330
28P/1221260	SP90/E6	Pin, split, 3/32" dia. x 3/4" long	4	–	C	KH7/331
	8U1351	Ring, split, 1-1/4" dia.	1	Brass		KH7/332
	6U1351	Ring, split, 1/2" dia.	4	Spring Steel		KH7/333
95186	1U1352	SLING, LIFTING, ELEVATOR, OUTBOARD, GROUP	1	–	B	KH7/334
		Consisting of:–				
	2U1352	Bar, spreader	1	–	C	KH7/335
95640	12U1068	Bolt, eye	2	S96	C	KH7/336
	12U1352	CABLE, INBOARD, GROUP	1	–		KH7/337
	13U1352	CABLE, OUTBOARD, GROUP	1	–		KH7/338
	7U1352	Chain, 8" long	2	V15		KH7/339
	3U1352	Head, lifting	1	Mild Steel		KH7/340
	1U1290	Label, capacity	1	Brass		KH7/341
28FP/9713920	A411	Pin, quick release	2	–	C	KH7/342
28P/4668901	SP4Y/E6	Pin, shackle, 11/32" dia. x 0.60" long	4	–	C	KH7/343
28P/1221260	SP90/E6	Pin, split, 3/32" dia. x 3/4" long	4	–	C	KH7/344
	6U1352	Ring, split, 1/2" dia.	4	Spring Steel		KH7/345
	8U1352	Ring, split, 1-1/4" dia.	1	–		KH7/346
95187	1U1353	SLING, LIFTING, AILERON, INBOARD, GROUP	1	–	B	KH7/347
		Consisting of:–				
	2U1353	Bar, spreader	1	–		KH7/348
95640	12U1068	Bolt, eye	2	S96	C	KH7/349
	11U1353	CABLE, INBOARD, GROUP	1	–		KH7/350
	12U1353	CABLE, OUTBOARD, GROUP	1	–		KH7/351
	6U1353	Chain, 8" long	2	V15		KH7/352
	3U1352	Head, lifting	1	Mild Steel		KH7/353
	1U1290	Label, capacity	1	Brass		KH7/354
28FP/9713920	A411	Pin, quick release	2	–	C	KH7/355
28P/4668901	SP4Y/G8	Pin, shackle, 11/32" dia. x 0.60" long	4	–	C	KH7/356
28P/1221260	SP90/E6	Pin, split, 3/32" dia. x 3/4" long	4	–	C	KH7/357
	5U1353	Ring, split, 1/2" dia.	4	Spring Steel		KH7/358
	7U1353	Ring, split, 1-1/4" dia.	1	–		KH7/359
95188	1U1354	SLING, LIFTING, AILERON, OUTBOARD, GROUP	1	–	B	KH7/360
		Consisting of:–				
	2U1354	Bar, spreader	1	–		KH7/361
95640	12U1068	Bolt, eye	2	S96	C	KH7/361

Ref. No.	Part No.	Description 1 2 3 4	No. off	Matl. Spec.	Cl. of St. / M.R.	Plate and Illust'n No.
		SLING, LIFTING, AILERON, OUTBOARD (1U1354) (Cont'd.)				
	11U1354	CABLE, INBOARD, GROUP	1	–		KH7/363
	12U1354	CABLE, OUTBOARD, GROUP	1	–		KH7/364
	7U1354	CHAIN, 8" long	2	V15		KH7/365
	3U1352	Head, lifting	1	Mild Steel		KH7/366
	1U1290	Label, capacity	1	Brass		KH7/367
28FP/9713920	A411	Pin, quick release	2	–	C	KH7/368
28P/4668901	AP4Y/G8	Pin, shackle, 11/32" dia. x 0.60" long	4	–	C	KH7/369
28P/1220716	SP90/E4	Pin, split, 3/32" dia. x 3/4" long	4	–	C	KH7/370
	6U1354	Ring, split, 1/2" dia.	4	Spring Steel	C	KH7/371
	8U1354	Ring, split, 1-1/4" dia.	1	–		KH7/372
95070	1U1181	SLING, FOR FIN CAP, GROUP	1	–	A	KH8/373
		Consisting of:–				
	2U1103	Bar, spreader	1	–		KH8/374
95614	6U1181	Bar, tommy, 1/8" dia. x 1-1/2" long	8	Mild Steel	C	KH8/375
	7U1103	Bolt, special, 5/16" dia. x 2 BA screwed x 2.157" long, at lifting head	8	Mild Steel		KH8/376
	2U1181	Cable, 10 cwt.	4	W2		KH8/377
	7U1181	Cable, 5 cwt.	1	Wire Rope		KH8/378
	1U1005	Label, "ident"	1	Brass		KH8/379
	4U1181	Plate, lifting, LH	2	–		KH8/380
	5U1181	Plate, lifting, RH	2	–		KH8/381
28Y/4677711	AGS136/A	Thimble, 0.12" groove	8	–	C	KH8/382
28W/9419402	SP13/C	Washer, 2 BA	8	–	C	KH8/383
	3U1181	Wire, binding, 22 SWG	QR	Copper		KH8/384
	1U1268	SLING, LIFTING, P.C.U. RUDDER, GROUP	1	–		KH8/385
		Consisting of:–				
	2U1268	Bracket, sling	1	–		KH8/386
	4U1268	Chain, 3" long	1	V15		KH8/387
	1U1290	Label	1	–		KH8/388
28FP/9469299	A409	Pin, quick release	1	–	C	KH8/389
95147	1U1267	SLING, LIFTING, FOR CABIN AIR CONDITIONING UNIT, GROUP	1	–	A	KH8/390
		Consisting of:–				
	3U1267	Arm, ball ended	2	Mild Steel		KH8/391
	2U1267	Bar, spreader	1	–		KH8/392
28N/9153393	AGS899/4	Collar, 1/4" i/d	2	–	C	KH8/393
	1U1005	Label, "ident"	1	Brass		KH8/394
28P/9486478	SP90/C5	Pin, split, 1/16" dia. x 3/4" long	2	–	C	KH8/395
28P/1015710	SP4Y/D8	Pin, shackle, 1/4" dia. x 0.60" long	2	–	C	KH8/396

GROUND EQUIPMENT

TRESTLING AND SLINGING

Ref. No.	Part No.	Description 1 2 3 4	No. off	Matl. Spec.	Cl. of St. M.R.	Plate and Illust'n No.
95121	1U1241	SLING, LIFTING, FOR METAL NOSE PORTION, GROUP	1	–	A	KH8/397
		Consisting of:–				
	2U1241	Bar, spreader	1	–	A	KH8/398
	4U1241	Bolt, eye	2	Mild Steel		KH8/399
28D/1011242	A25/7E	Bolt, hex. hd., 1/4" BSF	2	–	C	KH8/400
	6U1241	Chain, 6" long	2	V15		KH8/401
	8U1241	Label, "front"	1	L16		KH8/402
	9U1241	Label, "rear"	1	L16		KH8/403
	1U1005	Label, "ident"	1	Brass		KH8/404
28M/1011475	A27/EP	Nut, 1/4" BSF	2	–	C	KH8/405
	AS2434/13	Pin, quick release	2	–		KH8/406
	5U1241	Ring, split, 1" dia.	3	–		KH8/407
	3U1241	Shackle, 6" x 7-1/4" x 1/4" dia.	1	–		KH8/408
95148	1U1256	SLING, LIFTING, FOR DINGHY PACK, GROUP	1	–	A	KH8/409
		Consisting of:–				
	2U1256	Bar, spreader	1	–		KH8/410
28D/1008145	A25/6E	Bolt, hex. hd., 1/4" BSF	3	–	C	KH8/411
	6U1256	Chain, 6" long	3	V15		KH8/412
	1U1005	Label, "ident"	1	Brass		KH8/413
	3U1256	Link, swinging, 18.3" x 1" x 3/16"	1	Mild Steel		KH8/414
	4U1256	Link, swinging, 17.6" x 1" x 3/16"	2	Mild Steel		KH8/415
28M/1011467	A27/ES	Nut, slotted, 1/4" BSF	3	–	C	KH8/416
28P/9527619	SP90/C7	Pin, split, 1/16" dia. x 1" long	3	–	C	KH8/417
28FP/4062326	A512	Pin, quick release, Mk. 4, type A	3	–	C	KH8/418
	5U/1256	Ring, split, 1" dia.	4	–		KH8/419
28W/9418921	SP13/E	Washer, 1/4" BSF	3	–	C	KH8/420
95093	1U1182	SLING, LIFTING, FOR GREEN SATIN, GROUP	1	–	A	KH8/421
		Consisting of:–				
	2U1182	Bar, spreader	1	–		KH8/422
	3U1182	Cable, front, 10 cwt. x 21.37" long	2	SW2		KH8/423
	5U1182	Cable, rear, 10 cwt. x 23.62" long	2	SW2		KH8/424
95646	8U1182	Pad, soft solid rubber	2	–	C	KH8/425
95645	7U1182	PLATE, LIFTING, GROUP	1	–	C	KH8/426
28Y/4677711	AGS136/A	Thimble, 0.12" dia. groove	4	–	C	KH8/427
	4U1182	Wire, binding	QR	–		KH8/428
95228	1U1319	SLING, BOMB DOOR, GROUP	1	–	A	KH9/429
		Consisting of:–				
	2U1319	Bar, spreader	1	–		KH9/430
	3U1319	CABLE, GROUP	1	–		KH9/431

Ref. No.	Part No.	Description 1 2 3 4	No. off	Matl. Spec.	Cl. of St. M.R.	Plate and Illust'n No.
		SLING, BOMB DOOR (1U1319) (Cont'd.)				
	5U1319	Chain, 8" long	2	V15		KH9/432
	4U1319	Link	4	S92		KH9/433
	AS2444/23	Pin, quick release	2	—		KH9/434
28P/9458747	SP4Z/D9	Pin, solid	4	—	C	KH9/435
28P/9710567	SP90/C4	Pin, split	4	—	C	KH9/436
	4U1319	Ring, split, 1" dia.	4	Spring Steel		KH9/437
	7U1319	Strap, 1" webbing x 9' 0" long	2	—		KH9/438
	8U1319	Strap, attachment, 1" webbing x 18-1/2" long	2	NF100		KH9/439
95073	1U1271	SLING, LIFTING, FOR BOMB DOORS, GROUP	1	—	C	KH9/440
		Consisting of:—				
	2U1271	Cable, 20 cwt. x 26" long approx.	1	SW2		KH9/442
	1U1005	Label, ident	1	Brass		KH9/444
	4U1271	Ring, split, 1" dia.	2	Spring Steel		KH9/446
	3U1271	Wire, binding	QR	Copper		KH9/447
95094	1U1236	SLING, FOR N.B.C. CALCULATORS, CREW'S NACELLE, GROUP	1	—	A	KH9/448
		Consisting of:—				
	2U1236	Bar, spreader	1	—		KH9/449
	5U1236	Chain	2	V16		KH9/450
	3U1236	Hook	1	—		KH9/451
	1U1290	Label, ident	1	—		KH9/452
28FP/9485292	A405	Pin, quick release	2	—	C	KH9/453
	6U1236	Ring, split, 1/2" dia.	4	—		KH9/454
95365	1U1574	SLING, FOR MAIN UNDERCARRIAGE UNIT, GROUP	1	—	A	KH9/455
		Consisting of:—				
28D/1213631	A25/32N	Bolt, 1/2" BSF	1	—	C	KH9/456
	3U1574	Bracket, dual attachment	1	S514		KH9/457
	2U1574	CABLE, GROUP	1	—		KH9/458
	6U1574	Chain, 10" long	1	V15		KH9/459
	7U1574	Chain, 22" long	1	V15		KH9/460
	1U1290	Label	1	—		KH9/461
	4U1574	Link, forward	1	—		KH9/462
	5U1574	Link, rear	1	—		KH9/463
28M/1011001	A24/NS	Nut, slotted, 1/2" BSF	1	—	C	KH9/464
28P/9560929	SP90/E8	Pin, split, 3/32" dia. x 1-1/4" long	1	—	C	KH9/465
	AS2438/31	Pin, quick release, drop nose type	1	—		KH9/466
28FP/979	AS2438/38	Pin, quick release, drop nose type	1	—	C	KH9/467
	AS2438/34	Pin, quick release, drop nose type	2	—		KH9/467a
	8U1574	Ring, split, 1" dia.	5	—		KH9/468

GROUND EQUIPMENT

TRESTLING AND SLINGING

Ref. No.	Part No.	Description (1 2 3 4)	No. off	Matl. Spec.	Cl. of St. M.R.	Plate and Illust'n No.
95366	1U1575	SLING, FOR NOSE UNDERCARRIAGE UNIT, GROUP	1	—	A	KH9/469
		Consisting of:—				
	2U1575	CABLE, FRONT, GROUP	1	—		KH9/470
	8U1575	Chain, 8" long	2	V15		KH9/471
	1U1290	Label, capacity	1	—		KH9/472
	5U1575	Link, front	2	S514		KH9/473
	6U1575	Link, rear	2	S514		KH9/474
	3U1575	LOOP, CABLE, FRONT, GROUP	1	—		KH9/475
	4U1575	LOOP, CABLE, REAR, GROUP	1	—		KH9/476
	A608	Pin, quick release	2	—		KH9/479
	7U1575	Ring, split, 1/2" dia.	2	Spring Steel		KH9/480
	9U1575	Ring, split, 1" dia.	1	Spring Steel		KH9/481
	AS2808/8/08	Tube, distance	2	T35		KH9/482
	AS2808/9/08	Tube, distance	2	T35		KH9/483
95372	1U1620	SLING, FOR SUNSTRAND ALTERNATOR, GROUP	1	—	A	KH9/484
		Consisting of:—				
	3U1620	Cable, assembly	1	—		KH9/485
	5U1620	Chain, 5" long	1	V15		KH9/486
	2U1620	Head, lifting	1	—		KH9/487
	1U1586	Label, "ident"	1	Brass		KH9/488
28FP/9433676	A421	Pin, quick release	1	—	C	KH9/489
	4U1620	Ring, split, 3/4" or 1"	2	—		KH9/490
95398	1U1637	SLING, FOR JET PIPE, GROUP	1	—	A	KH9/491
		Consisting of:—				
	2U1637	Bar, spreader	1	—		KH9/492
28D/1212596	A25/35E	Bolt, 1/4" BSF	2	—	C	KH9/493
	4U1637	Cable, 5 cwt.	2	BS6.W2		KH9/494
	6U1637	Chain, 6" long	2	V15		KH9/495
	1U1290	Label, ident	1	Brass		KH9/496
28M/1011467	A27/ES	Nut, slotted, 1/4" BSF	2	—	C	KH9/497
28P/12462	SP9/C8	Pin, split, 1/16" dia. x 1" long	2	—	C	KH9/498
28FP/4069946	A437	Pin, quick release	2	—	C	KH9/499
28R/5410	AGS890/A	Ring, lifting	1	—	C	KH9/500
	7U1637	Ring, split, 3/4" dia.	2	Spring Steel		KH9/501
	3U1637	Strap, webbing	2	—		KH9/502
28Y/4677710	B/AGS/136	Thimble, 0.17" dia., groove	2	—	C	KH9/503
28Y/4677711	C/AGS/136	Thimble, 0.21" dia., groove	2	—	C	KH9/504

Ref. No.	Part No.	Description 1 2 3 4	No. off	Matl. Spec.	Cl. of St. / M.R.	Plate and Illust'n No.
	FB209004	SLING, ENGINE, "WORKSHOP USE", GROUP	1	–		
	AT62058	TOOLS, FOR JACK ASSEMBLY Consisting of:–	1	–		
	T425866	Guide, piston	1	–		
	T425867	Guide, piston	1	–		
	T425870	Plate, draw	1	–		
	T425872	Plug, taper	1	–		
	AT39058	Plug, test (for use on Jack Base Assembly)	1	S96		
	T425868	Ring, draw	1	–		
	T425869	Ring, draw	1	–		
	T425864	Ring, taper	1	–		
	T425865	Ring, taper	1	–		
	T425871	Ring, taper	1	–		
	AGS1186/F	Seal, 3/4" BSP (for use on Jack Base Assembly)	1	–		
	T511248	Spanner, "C"	1	–		
	T511246	Spanner, cruciform	1	–		
95382	T425873	Spanner, special	1	–	B	
	T425874	Spanner, special	1	–		
	T425875	Spanner, special	1	–		
	T425876	Spanner, special	1	–		
4Q/4230813	GM10101	TRESTLE, MK. 1, GROUP	2	–	A	
4Q/4230814	GM10102	TRESTLE, MK. 2 FOR 25 TON JACK, GROUP (See Ground Equipment and Jacking)	4	–	A	
	–	TRESTLE, U.J. NO. 16, FOR OUTER WING STEADING, DURING U/C. TEST, GROUP	2	–		
	–	TRESTLE, U.J. NO. 18, WITH TYPE A OR B BRACKETS LESS BEAM, GROUP (See Ground Equipment and Jacking)	1	–		

PLATE No. KH1
ISSUE 1

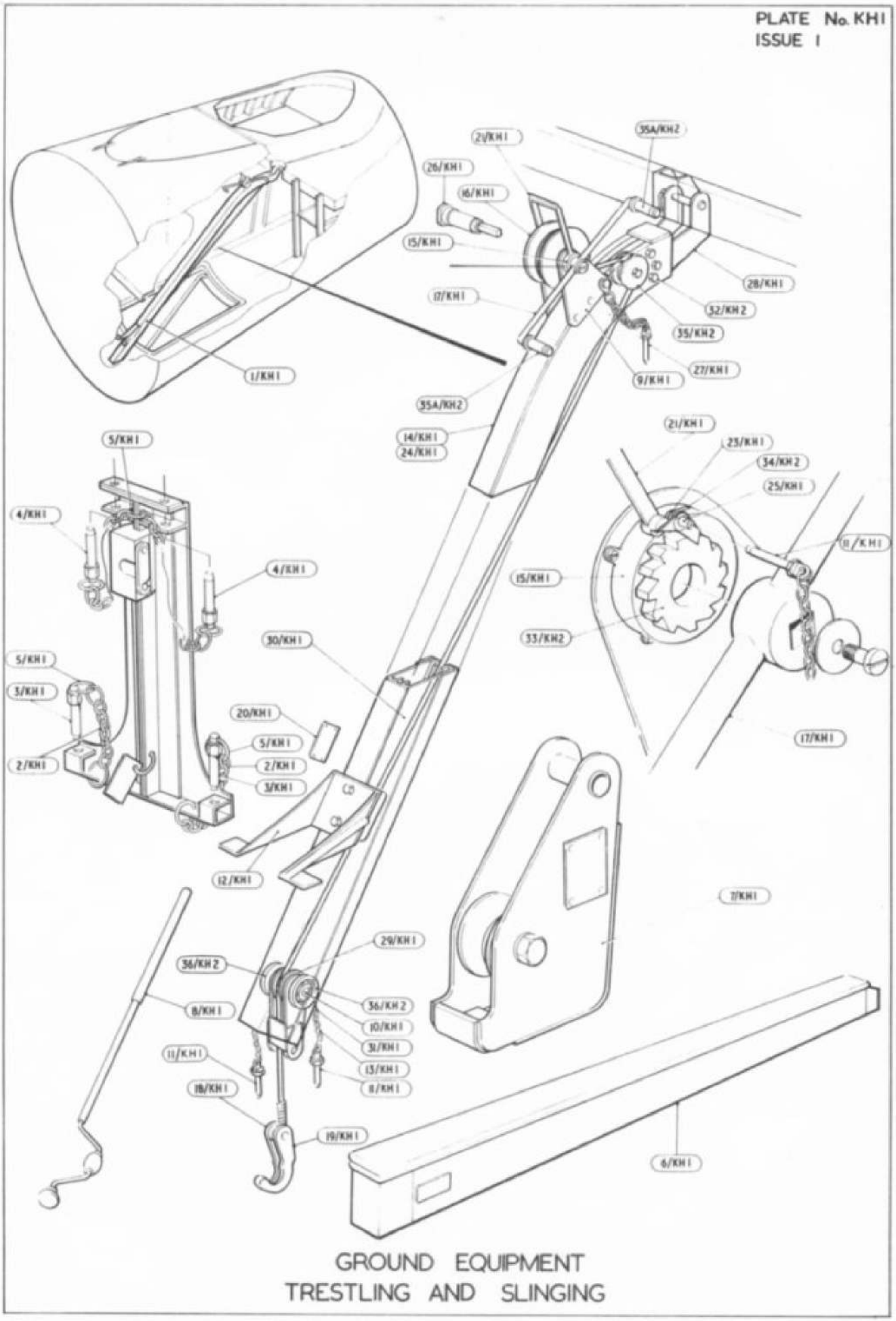

GROUND EQUIPMENT
TRESTLING AND SLINGING

PLATE No. KH2
ISSUE 1

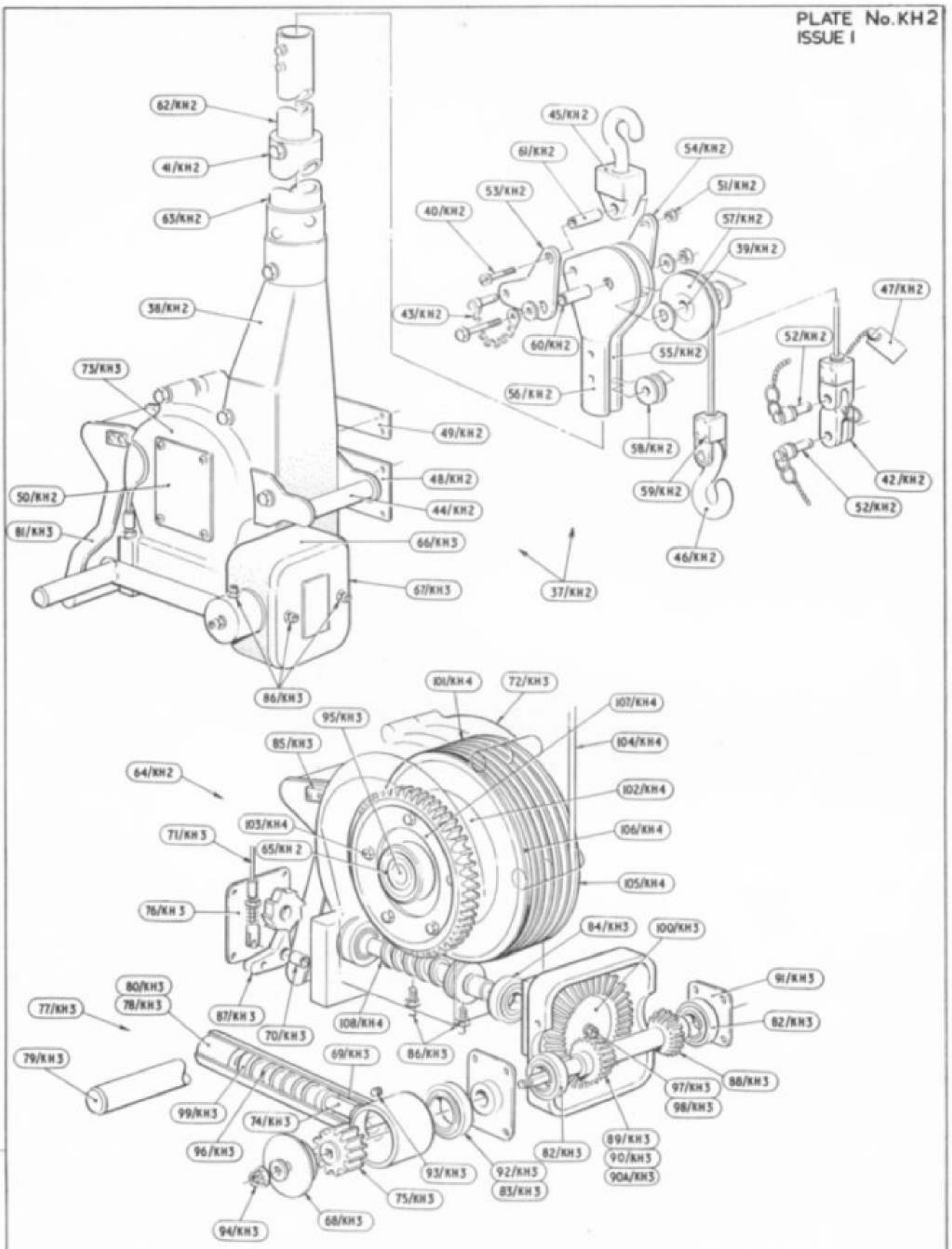

GROUND EQUIPMENT
TRESTLING AND SLINGING

PLATE No KH3
ISSUE 1

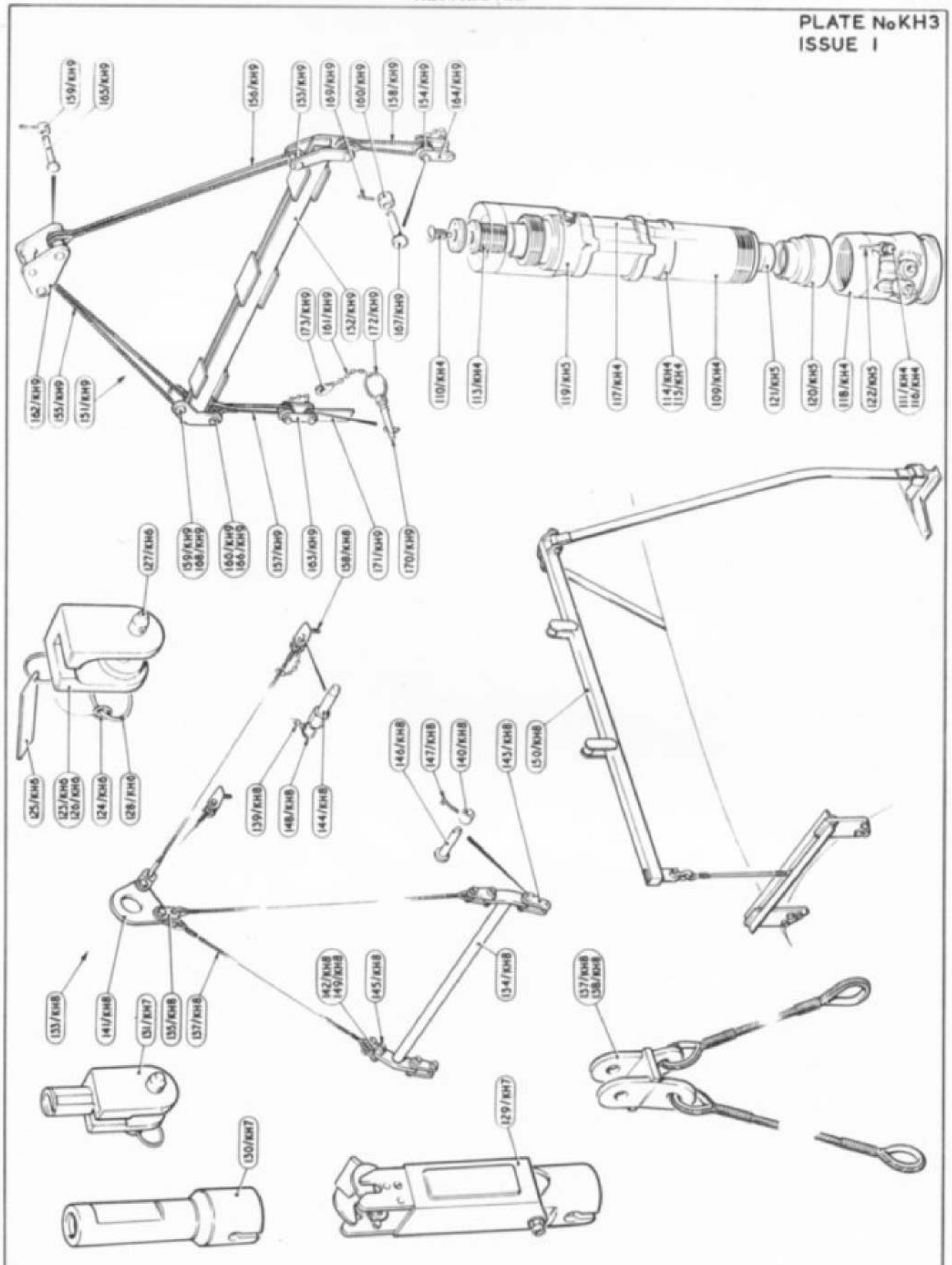

GROUND EQUIPMENT
TRESTLING AND SLINGING

PLATE No. KH. 4
ISSUE 1.

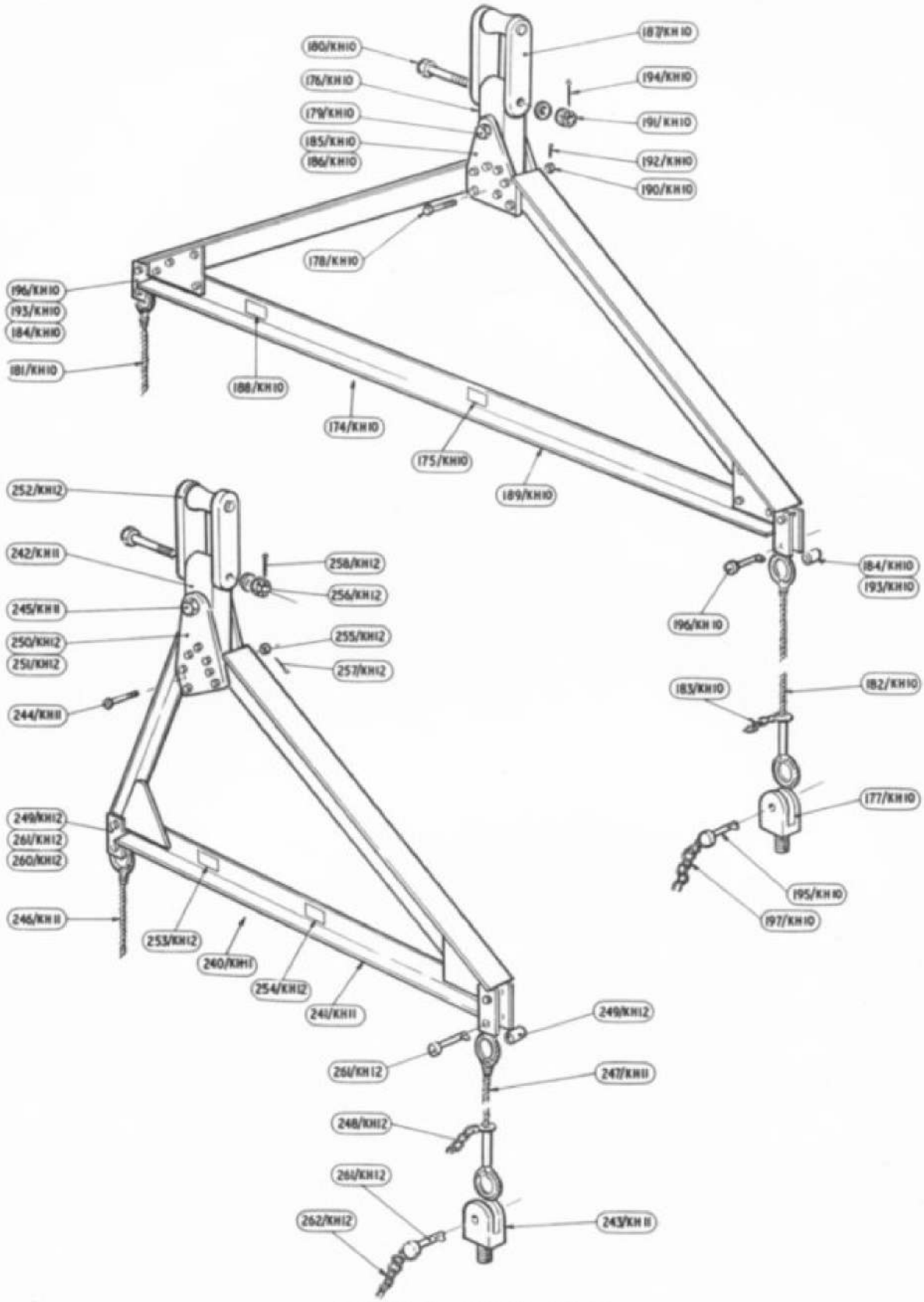

GROUND EQUIPMENT
TRESTLING AND SLINGING

PLATE No. KH. 5
ISSUE 1

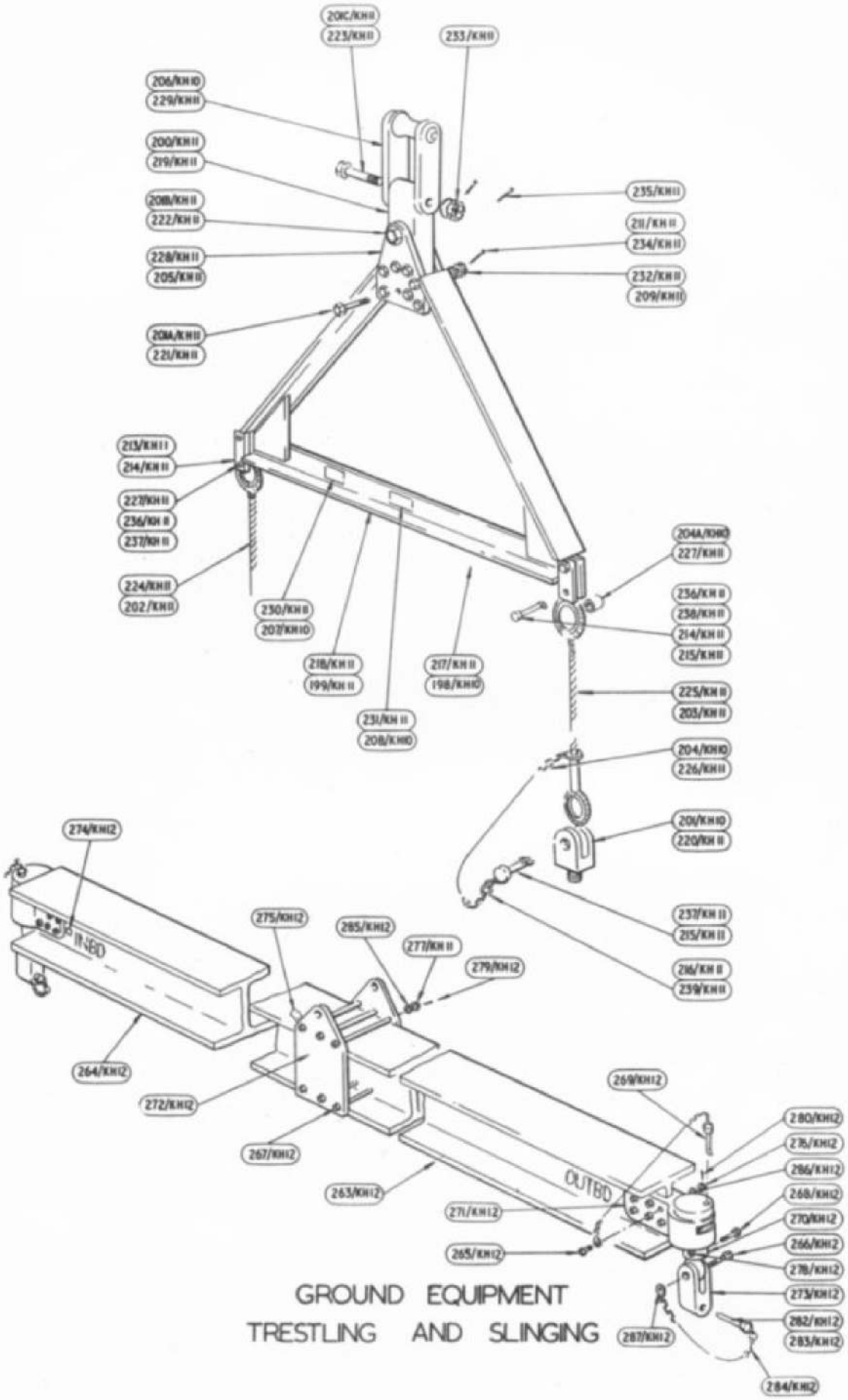

GROUND EQUIPMENT
TRESTLING AND SLINGING

PLATE No. KH6
ISSUE 1

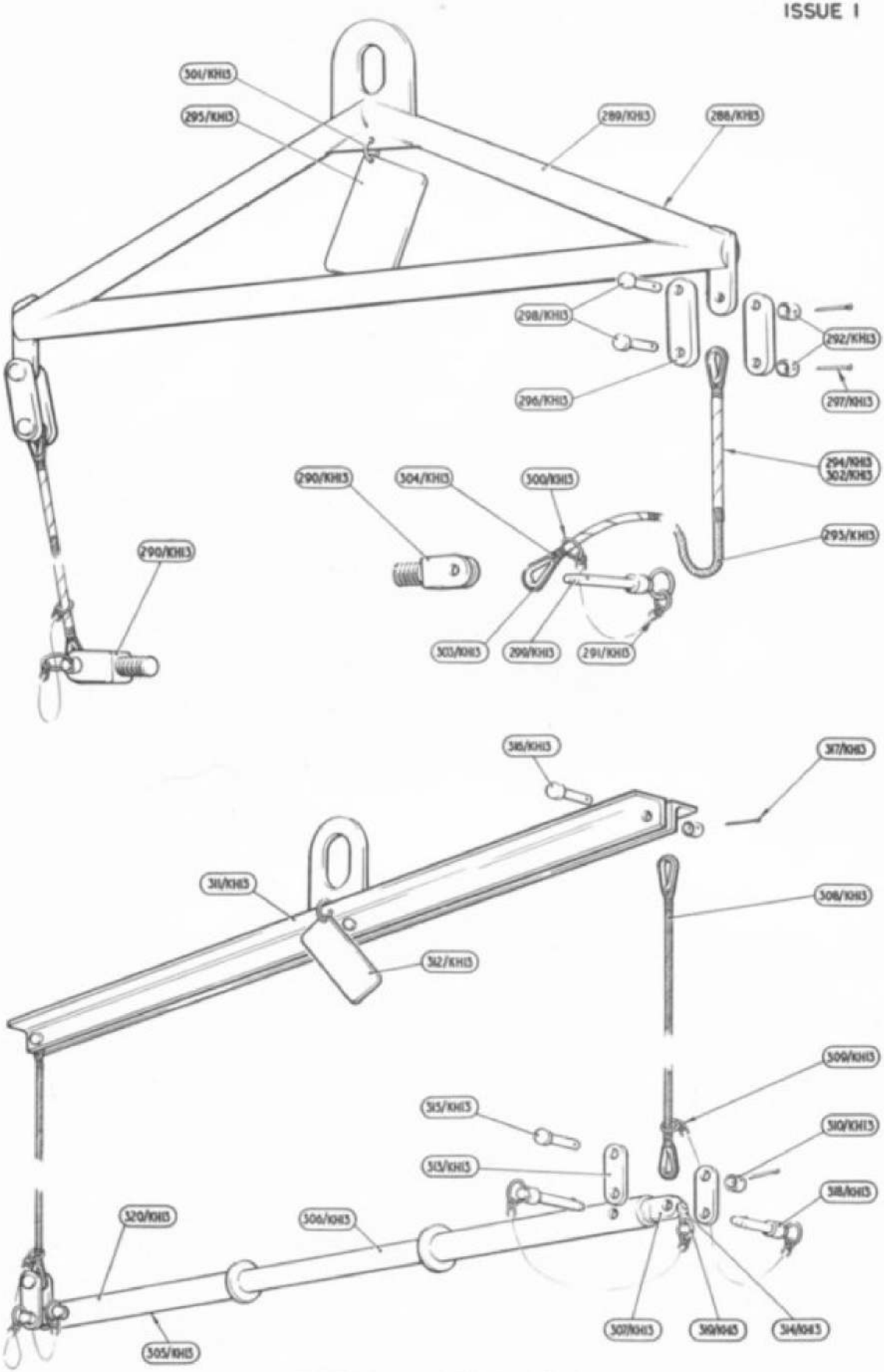

GROUND EQUIPMENT
TRESTLING AND SLINGING

PLATE No. KH7
ISSUE 1

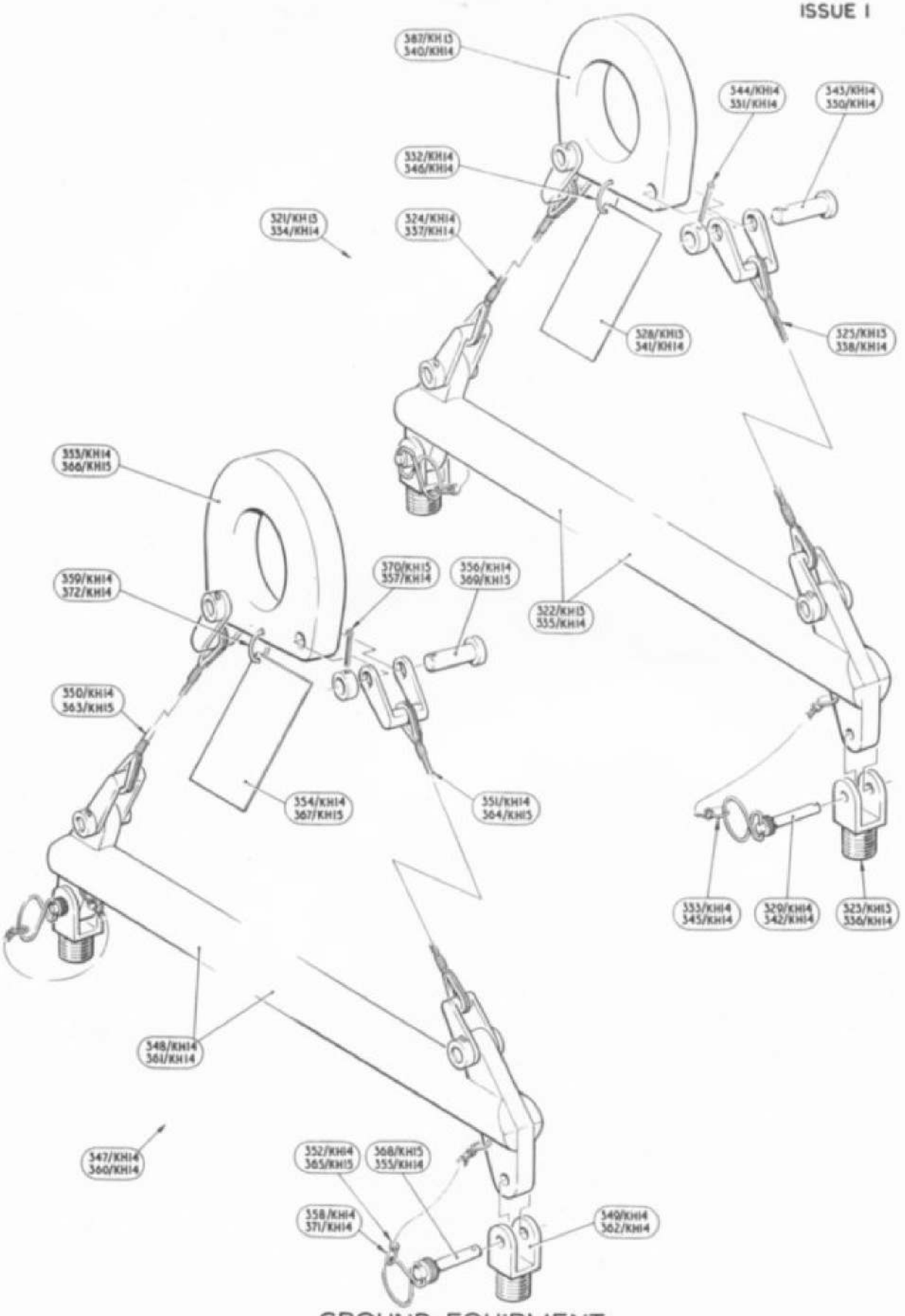

GROUND EQUIPMENT
TRESTLING AND SLINGING

PLATE No. KH8
ISSUE 1

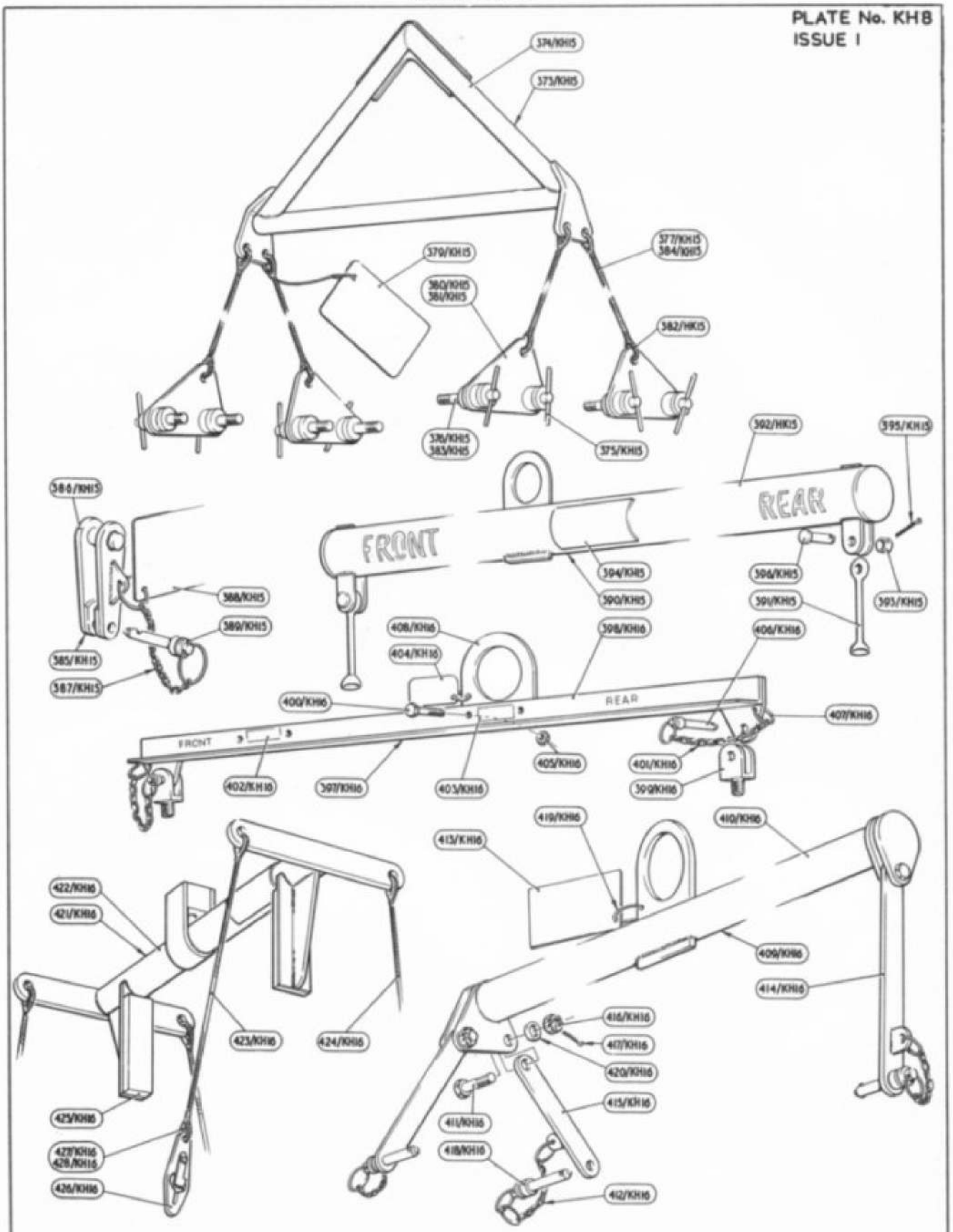

GROUND EQUIPMENT
TRESTLING AND SLINGING

PLATE No. KH 9
ISSUE 1

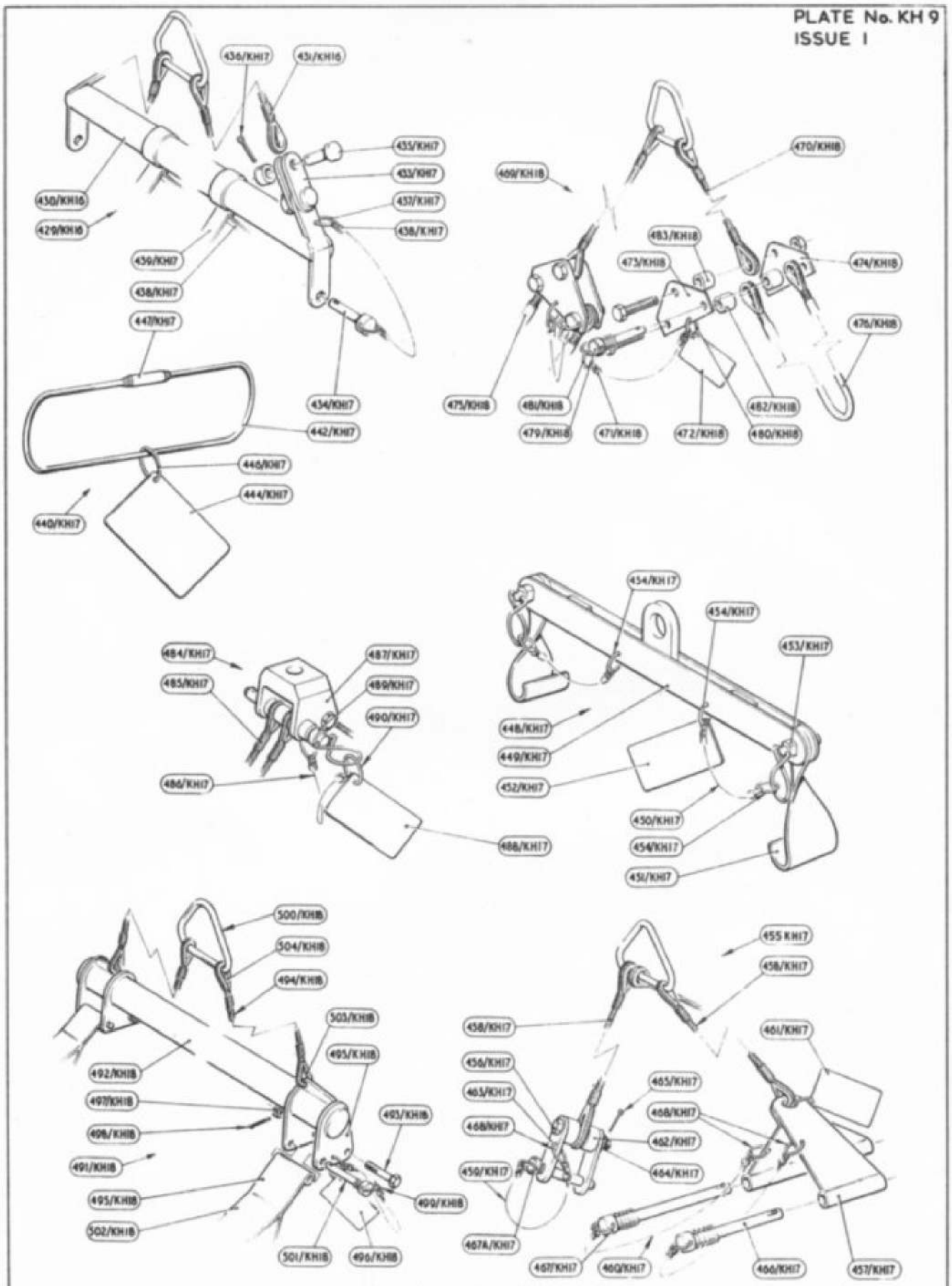

GROUND EQUIPMENT
TRESTLING AND SLINGING

This file was downloaded
from the RTFM Library.

Link: www.scottbouch.com/rtfm

Please see site for usage terms,
and more aircraft documents.