MAINPLANES

ELEVATOR INBOARD

(ELEVON INBOARD INNER)

Ref. No.	Part No.	Description 1 2 3 4	No. off	Matl. Spec.	Cl. of St. M.R.	Plate and Illust'n No.
515	85F7851	ELEVATOR, INBOARD, PORT, GROUP (Pre-Mod. 891)	1	—	A	MB1/1
552	89F7851	ELEVATOR, INBOARD, PORT, GROUP (Mod. 891)	1	—	A	
708	89F7851/C	ELEVATOR, INBOARD, PORT, GROUP	1	—	A	
725	89F7851/P	ELEVATOR, INBOARD, PORT, GROUP	1	—	A	
1432852	89F7851/PC	ELEVATOR, INBOARD, PORT, GROUP (Mod. 2129)	1	—	A	
516	86F7851	ELEVATOR, INBOARD, STARBOARD, ... GROUP (Pre-Mod. 891)	1	—	A	
553	90F7851	ELEVATOR, INBOARD, STARBOARD, ... GROUP (Mod. 891)	1	—	A	
709	90F7851/C	ELEVATOR, INBOARD, STARBOARD, ... GROUP	1	—	A	
726	90F7851/P	ELEVATOR, INBOARD, STARBOARD, ... GROUP	1	—	A	
1432853	90F7851/PC	ELEVATOR, INBOARD, STARBOARD, ... GROUP (Mod. 2129)	1	—	A	
		(Complementary parts e.g. inter-component attachments are not supplied with this assembly, but are listed in the complementary items at the end of the Mainplane Inner)				
		Spares for:—				
		BALANCE, MASS, PORT AND ..... STARBOARD (35 and 36.F8049)	—	—		MB1/2
		Spares for:—				
	1F8256	BALANCE, MASS, PORT, GROUP	1	—	MR	
	2F8256	BALANCE, MASS, STARBOARD, ... GROUP	1	—	MR	
		Attachments—Balances, Part Nos. 1 and 2F8256				
28H/4070303	AGS920/EM	Ferrule	56	—	C	
28H/4663996	AGS920/ES	Ferrule	38	—	C	
28R/7135393	AGS935/B	Rod, tie 4 BA x 1.75" long	47	—	C	
	12F8049	Weight)	3			
	18F8049	Weight)	1			
28D/1212792	AS1248—8C	Bolt) (Mod. 2475)	12	—	C	
28D/1212804	AS1248—12C	Bolt)	4	—	C	
28M/1012015	AGS2001C1/66	Nut)	16	—	C	
28W/9419402	SP13C	Washer (Mod. 2475)	16			
6586	1F9872	BEARING, CONTROL, RIB No. 17, ... PORT AND STARBOARD, GROUP	1	—	C	MB1/3
		Spares for:—				
	SKEFCO					
2A/9501524	22206	Bearing	1	—	C	
6584	7R4152	Bush, inboard	1	S1	C	MB1/4
6585	8R4152	Bush, outboard	1	S1	C	MB1/5
6560	AS4570/53	Circlip	1	—	C	
	5F9872	Housing, bearing	1	L65		
		Attachments—Bearing, Part No. 1F9872				
28D/1213449	A59/12J	Bolt, 3/8" BSF	2	—	C	
28D/9435056	A59/13J	Bolt, 3/8" BSF	2	—	C	
28W/9419466	SP13/J	Washer, 3/8"	4	—	C	
	or					
28W/9419456	SP10/J	Washer, 3/8"	4	—	C	

MAINPLANES
ELEVATOR OUTBOARD
(ELEVON INBOARD INNER)

Ref. No.	Part No.	Description (1 2 3 4)	No. off	Matl. Spec.	Cl. of St. M.R.	Plate and Illust'n No.
		PANEL, ACCESS, ARRANGEMENT AT RIBS 2 AND 3, PORT AND STARBOARD (1 & 2F8260)	—	—		MB1/6
		Spares for:—				
2208	1F8259	PANEL, DOOR, PORT, GROUP	1	—	B	
2209	2F8259	PANEL, DOOR, STARBOARD, GROUP	1	—	B	
		Spares for:—				
	5F8259	Hinge (Make from AS1880/5)	1	—		
		Attachments—Panels, Part Nos. 1 & 2F8259				
28D/1007975	AS1242/1C	Bolt, csk. hd., 2 BA	10	—	C	
28D1214091	AS1242/2C	Bolt, csk. hd., 2 BA	7	—	C	
28D/9709461	AS1242/3C	Bolt, csk. hd., 2 BA	1	—	C	
26FP/13043	1SS3259	Plate, mod record	1	—	C	
		Attachments—Plate, Part No. 1SS3259				
28S/9992525	A32/B12	Screw, rd. hd., 4 BA	4	—	C	
26FP/13044	1SS3260	Plate, serial	1	—	C	
12167	1F7978	RIB, HINGE, No. 1, PORT, GROUP	1	—	C	MB1/7
	2F7978	RIB, HINGE, No. 1, STARBOARD, GROUP	1	—		
		Spares for:—				
	SKEFCO					
2A/9501524	22206	Bearing	1	—	C	
2094	24F7978	Bush	2	S1	C	
	22F8013	Housing, bearing	1	S11		
		Attachments—Housing, Part No. 22F8013				
28D/1213592	A59/12E	Bolt, 1/4" BSF	4	—	C	
28D/1214034	AS1242/12C	Bolt, csk. hd., 2 BA	1	—	C	
28M/1011475	A27/EP	Nut, 1/4" BSF	4	—	C	
28M/9403520	A27/CP	Nut, 2 BA	1	—	C	
28W/9419405	SP15/E	Washer, 1/4"	4	—	C	
28W/7133548	AS1903/C10	Washer, saddle	1	—	C	
	AS2811/6/072	Tube, distance	4	—	C	
12186	1F7996	RIB, HINGE, No. 18, PORT, GROUP	1	—		MB1/8
	2F7996	RIB, HINGE, No. 18, STARBOARD, GROUP	1	—		
		Spares for:—				
	SKEFCO					
2A/9501524	22206	Bearing	1	—	C	
2206	55F7996	Bush	2	S1	C	
2207	1H2429	Cap, dust	1	S3	C	
2090	4H2355	Collar	1	S2 or S11	C	
	41F7996	Housing, bearing, port	1	S96		
	40F7996	Housing, bearing, starboard	1	S96		

Ref. No.	Part No.	Description (1 2 3 4)	No. off	Matl. Spec.	Cl. of St. M.R.	Plate and Illust'n No.
		RIB, HINGE, No. 18, PORT AND STARBOARD, GROUP (1 & 2F7996) (Cont'd.)				
		Attachments—Housings, Part Nos. 40 & 41F7996				
28D/1213592	A59/12E	Bolt, 1/4" BSF	4	—	C	
28D/1214034	AS1242/12C	Bolt, csk. hd. 2 BA	1	—	C	
28M/1011475	A27/EP	Nut, 1/4" BSF	4	—	C	
28M/9403520	A27/CP	Nut, 2 BA	1	—	C	
28W/9419405	SP15/E	Washer, 1/4"	4	—	C	
28W/9419475	SP15/C	Washer, 2 BA	1	—	C	
28N/9156370	SP21	Nipple, grease	1	—	C	
	AS2811/6/069	Tube, distance	4	—	C	
		SKIN, BOTTOM, BETWEEN RIBS 14 AND 18, PORT AND STARBOARD (25 & 26F8263)				MB1/9
		Spares for:—				
8010	1F10934	PANEL, DETACHABLE, PORT	1	—	C	
8011	2F10934	PANEL, DETACHABLE, STARBOARD,	1	—	C	
		Attachments—Panel, (Part Nos. 1 & 2F10934)				
28D/1007975	AS1242/1C	Bolt, csk. hd. 2 BA	7	—	C	
28D/1214091	AS1242/2C	Bolt, csk. hd. 2 BA	5	—	C	
		SPAR, INBOARD ELEVATOR, PORT, AND STARBOARD (74 & 75F7976)				MB1/10
		Spares for:—				
8242	5Z7647	BRACKET, ANGLE, FORWARD FOR CONTROL SURFACE INDICATOR CONNECTING ROD, GROUP	1	—	MR/C	
26FP/13043	1SS3259	Plate, mod record	1	—	C	
		Attachments—Plate, Part No. 1SS3259				
28D/1007979	AS1246/1B	Bolt, rd. hd. 4 BA	4	—	C	
26FP/13044	1SS3260	Plate, serial	1	—	C	
	1F8251	Strip, rubbing, bottom, rib 9	1	BSS668	MR	
	1F8252	Strip, rubbing, top, rib 9	1	BSS668	MR	
	2F8251	Strip, rubbing, bottom, rib 13	1	BSS668	MR	
	2F8252	Strip, rubbing, top, rib 13	1	BSS668	MR	
	6F8251	Strip, rubbing, bottom, rib 5	1	BSS668	MR	
	6F8252	Strip, rubbing, top, rib 5	1	BSS668	MR	

MAINPLANES
ELEVATOR OUTBOARD
(ELEVON INBOARD INNER)

Ref. No.	Part No.	Description 1 2 3 4	No. off	Matl. Spec.	Cl.of St. / M.R.	Plate and Illust'n No.

MAINPLANES
ELEVATOR OUTBOARD
(ELEVON OUTBOARD INNER)

Ref. No.	Part No.	Description (1 2 3 4)	No. off	Matl. Spec.	Cl. of St. M.R.	Plate and Illust'n No.
513	1F9724	ELEVATOR, OUTBOARD, PORT, GROUP (Pre-Mod. 891)	1	—	A	MB1/11
550	11F9724	ELEVATOR, OUTBOARD, PORT, GROUP (Mod. 891)	1	—	A	
720	111F9724/C	ELEVATOR, OUTBOARD, PORT, GROUP	1	—	A	
723	111F9724/P	ELEVATOR, OUTBOARD, PORT, GROUP	1	—	A	
1432854	111F9724/PC	ELEVATOR, OUTBOARD, PORT, GROUP (Mod. 2129)	1	—	A	
514	2F9724	ELEVATOR, OUTBOARD, STARBOARD GROUP (Pre-Mod. 891)	1	—	A	
551	112F9724	ELEVATOR, OUTBOARD, STARBOARD, GROUP (Mod. 891)	1	—	A	
721	112F9724/C	ELEVATOR, OUTBOARD, STARBOARD, GROUP	1	—	A	
724	112F9724/P	ELEVATOR, OUTBOARD, STARBOARD, GROUP	1	—	A	
1432855	112F9724/PC	ELEVATOR, OUTBOARD, STARBOARD, GROUP (Mod. 2129)	1	—	A	
		(Complementary parts e.g. inter-component attachments are not supplied with this assembly, but are listed in the complementary items at the end of the Mainplane Inner)				
		Spares for:—				
		BALANCE, MASS, PORT AND STARBOARD	—	—		MB1/12
	1F9867	BALANCE, MASS, PORT, GROUP	1	—	MR	
	2F9867	BALANCE, MASS, STARBOARD, GROUP	1	—	MR	
		Attachments—Balance, Part Nos. 1 & 2F9867				
28H/4070303	AGS920/EM	Ferrule	56	—	C	
28H/4663996	AGS920/ES	Ferrule	34	—	C	
28R/7135393	AGS935/B	Rod, tie, 4 BA	45	—	C	
	103F9724	Angle)	1			
	104F9724	Angle)	2			
	107F9724	Piece, packing)	1			
	99F9724	Weight) (Mod. 2475)	1			
	100F9724	Weight)	1			
28D/1212803	AS1248-21C	Bolt)	6		C	
28M/1012015	AGS2001C1/66	Nut)	6		C	
28W/9419402	SP13C	Washer)	6		C	
6583	2F9872	BEARING, CONTROL, AT RIB 20, PORT AND STARBOARD, GROUP	1	—	C	MB1/13
		Spares for:—				
	SKEFCO					
2A/9501524	22206	Bearing	1	—	C	
6584	7R4152	Bush	1	S1	C	MB1/14
6585	8R4152	Bush	1	S1	C	MB1/15
6560	AS4570/53	Circlip	1	—	C	
12788	7F9872	Housing, bearing	1	L65	C	
		Attachments—Bearing, Part No. 2F9872				
28D/1213449	A59/12J	Bolt, 3/8" BSF	2	—	C	
28D/9435056	A59/13J	Bolt, 3/8" BSF	2	—	C	
28W/9419466	SP13/J	Washer, 3/8"	4	—	C	
	or					
28W/9419456	SP10/J	Washer, 3/8"	4	—	C	

MAINPLANES
ELEVATOR OUTBOARD
(ELEVON OUTBOARD INNER)

Ref. No.	Part No.	Description (1 2 3 4)	No. off	Matl. Spec.	Cl. of St. / M.R.	Plate and Illust'n No.
		HINGE, OUTBOARD, RIB 35, PORT AND STARBOARD (92F9724)	1	—		MB1/16
		Spares for:—				
	SKEFCO 22207	Bearing	1	—		
28N/2001546	AGS2031/28	Circlip	1	—	C	
28M/1011475	A27/EP	Nut, 1/4" BSF	3	—	C	
	11SS4185	Pin, taper	3	—		
	94F9724	Spigot, hinge	1	S96		
	93F9724	Tube	1	L65		
28W/9418920	SP10/E	Washer, 1/4"	3	—	C	
6582	95F9724	Washer, seal	1	S1	C	
26FP/13043	1SS3259	Plate, mod record	1	—	C	
		Attachments—Plate, Part No. 1SS3259				
28S/992525	A32/B12	Screw, rd. hd., 4 BA	4	—	C	
26FP/13044	1SS3260	Plate, serial	1	—	C	
4445	10H2378	Plug, for lifting point	1	L1	C	
		RIB, HINGE, No. 19, PORT AND STARBOARD (1 & 2F9760)	—	—		MB1/17
		Spares for:—				
	7F9760	BEARING, HINGE, PORT, GROUP	1	—		
	8F9760	BEARING, HINGE, STARBOARD, GROUP	1	—		
		Spares for:—				
	SKEFCO 22206	Bearing	1	—	C	
2206	55F7996	Bush	2	S1	C	
2207	1H2429	Cap, dust	1	S3	C	
2090	4H2355	Collar	1	S2 or S11	C	
	40F7996	Housing, bearing, port	1	S96		
	41F7996	Housing, bearing, starboard	1	S96		
28N/9156370	SP21	Nipple, grease	1	—	C	
		Attachments—Bearing, Part Nos. 7 & 8F9760				
28D1213592	A59/12E	Bolt, 1/4" BSF	4	—	C	
28D/1214034	AS1242/12C	Bolt, csk. hd., 2 BA	1	—	C	
28M/1011475	A27/EP	Nut, 1/4" BSF	4	—	C	
28M/9403520	A27/CP	Nut, 2 BA	1	—	C	
28W/9419405	SP15/E	Washer, 1/4"	4	—	C	
28W/9419475	SP15/C	Washer, 2 BA	1	—	C	
	AS2811/6/069	Tube, distance	4	—		
	—	SKINNING, BOTTOM, BETWEEN RIBS 19 & 23, FORWARD OF STAR, PORT AND STARBOARD (1 & 2F10919)	—	—		MB1/18
		Spares for:—				
7538	1F101916	PANEL, DETACHABLE, PORT, GROUP	1	—	C	
7539	2F10916	PANEL, DETACHABLE, STBD., GROUP	1	—	C	

Ref. No.	Part No.	Description (1 2 3 4)	No. off	Matl. Spec.	Cl. of St. M.R.	Plate and Illust'n No.
		SKINNING, BOTTOM, BETWEEN RIBS 19 AND 23, FORWARD OF SPAR, PORT AND STARBOARD (1 & 2F10919) (Cont'd.)				
		Attachments—Panels, Part Nos. 1 & 2F10916				
28D/1007975	AS1242/1C	Bolt, csk. hd. 2 BA	6	—	C	
28D/1214091	AS1242/2C	Bolt, csk. hd. 2 BA	5	—	C	
		SKINNING, TOP, BETWEEN RIBS 19 & 23, FORWARD OF SPAR, PORT AND STARBOARD (1 & 2F10920)				
		Spares for:—				
	7F8042	Block, for screwed plug	1	DTD364		
		Attachments—Block, Part No. 7F8042				
28D/9419397	A25/12C	Bolt, 2 BA	4	—	C	
28M/9403520	A27/CP	Nut, 2 BA	4	—	C	
28W/9419475	SP15/C	Washer, 2 BA	4	—	C	
4445	10H2378	Plug, for lifting point	1	L1	C	
		SPAR, INBOARD, ELEVATOR, PORT AND STARBOARD (1 & 2F9759)				
		Spares for:—				
8242	5Z7647	BRACKET, ANGLE, FORWARD, FOR CONTROL SURFACE INDICATOR CONNECTING ROD, GROUP	1	—	MR/C	
26FP/13043	1SS3259	Plate, mod record	1	—	C	
		Attachments—Plate, Part No. 1SS3259				
28D/1007979	AS1426/1B	Bolt, rd. hd. 4 BA	4	—	C	
26FP/13044	1SS3260	Plate, serial	1	—	C	
	3F8251	Strip, rubbing, bottom, rib 24	1	BSS669		
	3F8252	Strip, rubbing, top, rib 24	1	BSS668		
	4F8251	Strip, rubbing, bottom, rib 28	1	BSS668		
	4F8252	Strip, rubbing top, rib 28	1	BSS668		
	5F8251	Strip, rubbing, bottom, rib 32	1	BSS668		
	5F8252	Strip, rubbing, top, rib 32	1	BSS668		

MAINPLANES

ELEVATOR OUTBOARD

(ELEVON OUTBOARD INNER)

Ref. No.	Part No.	Description 1 2 3 4	No. off	Matl. Spec.	Cl. of St. / M.R.	Plate and Illust'n No.

MAINPLANES

ELEVATORS (ELEVONS)

SUMMARY OF STANDARD ITEMS

Stores Ref.		No. off	Stores Ref.		No. off	Stores Ref.		No. off
Section	Ref. No.		Section	Ref. No.		Section	Ref. No.	
28D	1007975	46	28H	6442	144	28R	6124	184
28D	1007979	8	28H	7859	224			
28D	1213449	4						
28D	1213592	24				28S	9992525	8
28D	1214034	6	28M	1011475	27			
28D	1214091	34	28M	9403520	10			
28D	9419397	4				28W	9418920	3
28D	9435056	4				28W	9419405	24
28D	9709461	2	28N	2001546	1	28W	9419456	8
			28N	9156370	4	28W	9419466	8
						28W	9419475	8

PLATE No. MB 1
ISSUE 1

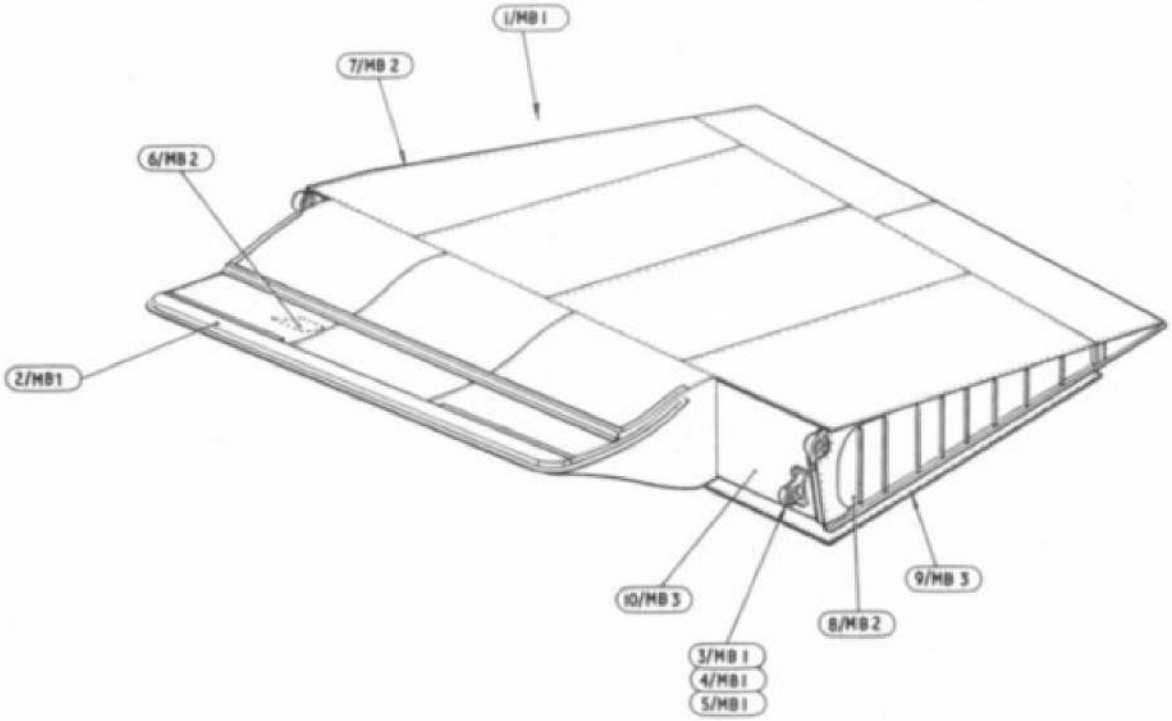

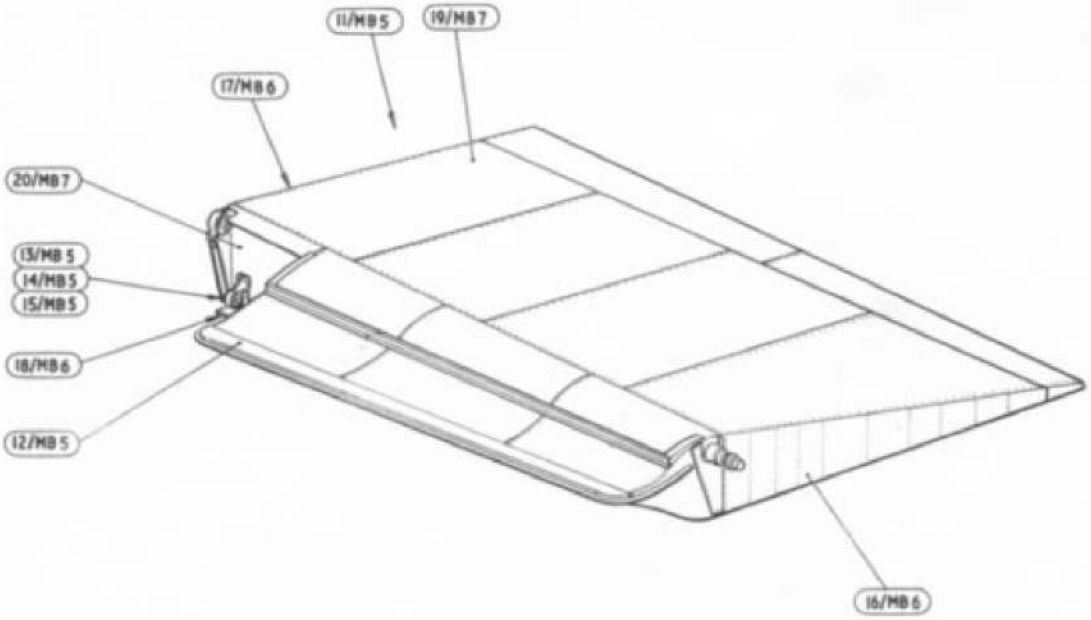

MAIN PLANES
ELEVATORS - INBOARD AND OUTBOARD

This file was downloaded
from the RTFM Library.
Link: www.scottbouch.com/rtfm

Please see site for usage terms,
and more aircraft documents.