INNER MAINPLANES

Ref. No.	Part No.	Description (1 2 3 4)	No. off	Matl. Spec.	Cl. of St. / M.R.	Plate and Illust'n No.
		MAINPLANE AND EQUIPMENT, INNER AND OUTER, PORT (9F9700) MAINPLANE AND EQUIPMENT, INNER AND OUTER, STARBOARD (10F9700)				
		Spares for:–				
	21F9701	MAINPLANE, INNER PORTION, PORT, GROUP (Pre-Mod. 1106)	1	–		MC1/1
	157F9701/C	MAINPLANE, INNER PORTION, PORT, GROUP (Mod. 1106) (S.O.O.)	1	–		
	157F9701/PC	MAINPLANE, INNER PORTION, PORT, GROUP (Mod. 2129)	1	–		
	22F9701	MAINPLANE, INNER PORTION, STARBOARD, GROUP (Pre-Mod. 1106)	1	–		MC1/2
	158F9701/C	MAINPLANE, INNER PORTION, STARBOARD, GROUP (Mod. 1106) (S.O.O.)	1	–		
	158F9701/PC	MAINPLANE, INNER PORTION, STARBOARD, GROUP (Mod. 2129)	1	–		
		(Complementary parts e.g. inter-component attachments, listed at the end of the assembly, will not be supplied with the assembly spare and must be demanded separately when required)				
		Spares for:–				
		AUXILIARY AIRBORNE POWER PLANT, STARBOARD (50F10364) (See Equipment–Aircraft)				
	156F7500	Bolt, special, connecting to undercarriage door, hydraulic jack	2	S96	MR	MC1/3
	145F10191	BULKHEAD, FORWARD MAIN UNDERCARRIAGE BAY, PORT, GROUP (Mod. 1200)	1	–	QR	MC1/4
	146F10191	BULKHEAD, FORWARD MAIN UNDERCARRIAGE BAY, STARBOARD, GROUP (Mod. 1200)	1	–	QR	MC1/5
		Spares for:–				
	141F10191	DOOR, ACCESS, PORT, GROUP	1	–	MR	MC1/6
10833	142F10191	DOOR, ACCESS, STARBOARD, GROUP	1	–	C	MC 1/7
		Spares for:–				
28FP/4062415	A6/40	Fastener, "Dzus"	3	–	C	
28FP/9494288	A6/50	Fastener, "Dzus"	5	–	C	
28FP/9145888	GA6/350	Grommet	8	–	C	
	AS1880/17	Hinge	1	–		
26FP/13043	1SS3259	Plate, mod. record	1	–	C	
		Attachments–Plate, Part No. 1SS3259				
28D/1007285	AS1242/1B	Bolt, c'sk hd, 4 BA	4	–	C	
26FP/13044	1SS3260	Plate, serial	1	–	C	
28FP/9145889	S6/250	Spring, Dzus	8	–	C	

MAINPLANES

INNER MAINPLANES

Ref. No.	Part No.	Description (1 2 3 4)	No. off	Matl. Spec.	Cl. of St. / M.R.	Plate and Illust'n No.
		MAINPLANE, INNER PORTION, PORT AND STARBOARD, GROUP (21, 22, 157 & 158F9701) (Mod. 1106 & 2129) (Cont'd)				
	1F10192	BULKHEAD, REAR MAIN UNDER-CARRIAGE BAY, PORT, GROUP	1	–	MR	MC1/8
	2F10192	BULKHEAD, REAR MAIN UNDER-CARRIAGE BAY, STARBOARD, GROUP	1	–	MR	MC1/9
		Spares for:–				
	13F8310	DOOR, ACCESS, PORT, GROUP	1	–	MR	MC1/10
	14F8310	DOOR, ACCESS, STARBOARD, GROUP	1	–	MR	MC1/11
		Spares for:–				
28FP/9430917	AJ4/40	Fastener, dzus	10	–	C	
28FP/9430915	GA4/250	Grommet	10	–	C	
	567SS6006	Label	1	–	C	
26FP/9430916	S4/200	Spring, dzus	10	–	C	
		BULKHEAD, AUXILIARY AIRBORNE POWER UNIT AND TANK GUARD, AFT REAR UNDERCARRIAGE BAY, STAR-BOARD (79F10377) (Mod. 1458)		–		MC1/12
		Spares for:–				
	106F10377	BULKHEAD, GROUP	1	–		
28E/9128961	AGS605/1	Clip, jubilee	1	–	C	MC1/13
	8P2787	Hose, P.R. 1" i/d x 1-3/8" o/d x 2-1/4" long (I.M.32C1275038)	1	BSF67		MC1/14
21690	1SS4070	Nut, lock	1	–	C	MC1/15
	98F10377	PANEL, BULKHEAD, GROUP (Mod. 1414)	1	–	MR	MC1/16
		Spares for:–				
28FP/9144248	A4/25	Fastener, dzus	14	–	C	
28FP/9430915	GA4/250	Grommet	14	–	C	
13126	91F10377	PANEL, TANK GUARD, GROUP	1	–		MC1/17
		Spares for:–				
28FP/9144248	A4/25	Fastener, dzus	8	–	C	
28FP/9488815	A4/30	Fastener, dzus	14	–	C	
28FP/9430915	GA4/250	Grommet	8	–	C	
28FP/9489246	GH/4	Grommet	14	–	C	
	34F/10377	Seal, rubber (Make from 1SS4396 36" long, Ref. No. 26DC/7208)	1	DTD560		MC1/18
	90F10377	Seal, rubber (Make from 1SS4396 36" long, Ref. No. 26DC/7208)	1	DTD560		MC1/19
	105F10377	Seal, rubber (Make from 1SS4396 16" long, Ref. No. 26DC/7208)	1	DTD560		MC1/20
	107F10377	Seal, rubber (Make from 1SS4396 16" long, Ref. No. 26DC/7208)	1	DTD560		MC1/21
28FP/9430916	S4/200	Spring, dzus	36	–	C	
13655	109F10377	TRAY, DRIP, A.P.U. FUEL TANK, GROUP	1	–	C	MC1/22
		Spares for:–				
	44F10377	Adaptor, flange	1	–		MC1/23
26FP/7268	1SS3512	Clip	1	–	C	MC1/24
26FP/2721	2SS3859	Clip	1	–	C	MC1/25

Ref. No.	Part No.	Description (1 2 3 4)	No. off	Matl. Spec.	Cl. of St. M.R.	Plate and Illust'n No.
		TRAY, DRIP, A.P.U. FUEL TANK, GROUP (109F10377) (Cont'd)				
		Attachments—Clips, Part Nos. 1SS3512 & 2SS3859				
28D/1007972	A25/ 1/2C	Bolt, 2 BA	2	—	C	
28M/1012015	AGS2001/C1/66	Nut, stiff, 2 BA	2	—	C	
28W/9419402	SP13/C	Washer, 2 BA	1	—	C	
28W/9419475	SP15/C	Washer, 2 BA	1	—	C	
	18cF10377	Seal, rubber, 1/16" x .75" x 20.5" long	1	DTD560		MC1/26
	18dF10377	Seal, rubber, 1/16" x .75" x 17.75" long	1	DTD560		MC1/27
	18eF10377	Seal, rubber, 1/16" x .75" x 19.9" long	1	DTD560		MC1/28
	88bF10377	Seal, rubber, 1/16" x .75" x 14" long	1	DTD560		MC1/29
		Attachments—Drip Tray, Part No. 109F10377				
28D/1007981	AS1248/ 1/2C	Bolt, mush, hd., 2 BA	18	—	C	
28D/1007982	AS1248/1C	Bolt, mush, hd., 2 BA	6	—	C	
	1SS4049	Union	1	—		MC1/30
28F/9157486	AGS1112/F	Union, body	1	—	C	MC1/31
28F/1036557	AGS1111/C	Union, cone	1	—	C	MC1/32
		Attachments—Unions, Part Nos. AGS1111/C & AGS1112/F				
28D/9436920	A25/1C	Bolt, 2 BA	12	—	C	
28M/1012015	AGS2001/C1/66	Nut, stiff. 2 BA	12	—	C	
28W/9419402	SP13/C	Washer, 2 BA	12	—	C	
	—	VALVE, OXYGEN CHARGING, PRESSURE GAUGE AND SUMP OIL TEMPERATURE INDICATOR (53F10377)	—	—		MC1/33
		Spares for:—				
	114F10377	Angle (Mod. 2250)	1	—	—	
5K/9325186	NX1	Clip	1	—	C	MC1/34
		Attachments—Clip, Part No. 2SS4657				
28D/1010658	A25/1B	Bolt, 4 BA	1	—	C	
28M/1201813	AGS2002/ B/1	Nut, stiff, 4 BA	1	—	C	
28W/9410474	SP15/B	Washer, 4 BA	1	—	C	
	54F10377	Cover	1	—		MC1/35
	75F10377	Fairlead, half	2	—		MC1/36
		Attachments—Fairlead, Part No. 75F10377				
28D/1007973	AS1242/2B	Bolt, csk. hd., 4 BA	4	—	C	
	113F10377	Fairlead, half (Mod. 2250)	2	—		
		Attachments—Fairlead, Part No. 113F10377				
28D/1011021	A25/16C	Bolt, 2 BA	2	—	C	
28M/1012015	AGS2001/C1/66	Nut, stiff. 2 BA	2	—	C	
28W/9419402	SP13/C	Washer, 2 BA	2	—	C	
6D/2237	—	Gauge, pressure	1	—	C	MC1/37
		Attachments—Pressure Gauge Ref. No. 6D/2237				
28S/1008327	A32/B14 or	Screw, rd. hd., 4 BA	4	—	C	
28DU/ 6480226	A116/1B	Bolt, Pan Hd., No. 6 UNC 2A	4	—	C	

Ref. No.	Part No.	Description (1 2 3 4)	No. off	Matl. Spec.	Cl. of St. M.R.	Plate and Illust'n No.
		VALVE, OXYGEN CHARGING, PRESSURE GAUGE AND SUMP OIL TEMPEARTURE INDICATOR (53F10377) (Cont'd)	—	—		
6A/4333389	—	Indicator, type "C"	1	—	A	MC1/38
		Attachments—Indicator, Ref. No. 6A/3683				
28S/9992522	A32/B16	Screw, rd. hd., 4 BA	4	—	C	
6A/3651	—	Label, oil	1	—	C	
		PIPES, OXYGEN, CHARGING, VALVE AND GAUGE TO ROVER UNIT INSTALLATION (1Z10231)	—	—		MC1/39
		Spares for:—				
	AS4525/3	Clip	6	—		MC1/40
		Attachments—Clip, Part No. AS4525/3				
28D/9436920	A25/1C	Bolt, 2 BA	3	—	C	
28M/1012015	AGS2001/C1/66	Nut, stiff, 2 BA	3	—	C	
28W/9419475	SP15/C	Washer, 2 BA	3	—	C	
10224	9SS1877	Elbow (Mod. 2250)	2	—		
6D/575	—	Piece, connecting, 2-way	2	—	C	
	2Z10231	PIPE, OXYGEN, GROUP (Pre-Mod. 2250)	1	—	MR	MC1/41
1505362	11Z10231	PIPE, OXYGEN, GROUP (Mod. 2250)	1	—		
	3Z10231	PIPE, OXYGEN, GROUP (Pre-Mod. 2250)	1	—	MR	MC1/42
	7Z10231	PIPE, OXYGEN, GROUP (Mod. 2250) (Pre-Mod. 2437)	1	—	MR	
6116204	12Z10231	PIPE, OXYGEN, GROUP (Mod. 2437)	1	—	C	
	4Z10231	PIPE, OXYGEN, GROUP (Pre-Mod. 2250)	1	—	MR	MC1/43
1505361	10Z10231	PIPE, OXYGEN, GROUP (Mod. 2250)	1	—		
	5Z10231	PIPE, OXYGEN, GROUP (Pre-Mod. 2250)	1	—	MR	MC1/44
1505357	6Z10231	PIPE, OXYGEN, GROUP (Mod. 2250)	1	—		
1505359	8Z10231	PIPE, OXYGEN, GROUP (Mod. 2250)	1	—		
1505360	9Z10231	PIPE, OXYGEN, GROUP (Mod. 2250)	1	—		
	59F10377	Seal, for drip tray, 1/16" x .6" x 6"	1	DTD560		MC1/45
	61F10377	Seal, for drip tray, 1/16" x .6" x 8.25"	1	DTD560		MC1/46
26FP/13570	106Z2165	Union, blanking (Pre-Mod. 2437)	1	—	C	MC1/47
6D/2313	—	Valve, oxygen (Pre-Mod. 2437)	1	—	B	MC1/48
6D/2244774	—	Valve, oxygen (Mod. 2437)	1	—	C	MC1/48
		Attachments—Valve, Ref. No. 6D/1872				
28D/9140645	A25/10C	Bolt, 2 BA	2	—	C	
28W/9419475	SP15/C	Washer, 2 BA	2	—	C	

Ref. No.	Part No.	Description (1 2 3 4)	No. off	Matl. Spec.	Cl. of St. M.R.	Plate and Illust'n No.
		CONTROLS, FLYING, PORT AND STARBOARD (1 & 2R4417) (See Controls—Flying)				
	1801F9665/C	EDGE, LEADING, PORT, GROUP (Mod. 1022)	1	—		MC2/49
	2031F9665	EDGE, LEADING, PORT, GROUP (Mod. 1914)	1	—		
	2033F9665/PC	EDGE, LEADING, PORT, GROUP (Mod. 2081)	1	—	MR	
	2051F9665/PC	EDGE, LEADING, PORT, GROUP (Mod. 2199)	1	—	B	
	1802F9665/C	EDGE, LEADING, STARBOARD, GROUP (Mod. 1022)	1	—		MC2/50
	2032F9665	EDGE, LEADING, STARBOARD, GROUP (Mod. 1914)	1	—		
	2034F9665/PC	EDGE, LEADING, STARBOARD, GROUP (Mod. 2081)	1	—	MR	
	2052F9665/PC	EDGE, LEADING, STARBOARD, GROUP (Mod. 2199)	1	—	B	
		Spares for:—				
27N/99	—	Bottle, fire extinguisher	3	—	A	MC2/51
12K/1316	—	Cartridge	3	—	C	MC2/52
	5SS3859	Clip, for conduit	4			
26FP/13420	10SS3859	Clip, for spray pipe	4	—	C	
26FP/13421	14SS3859	Clip, for spray pipe	3	—	C	
	18SS3894	Clip, for spray pipe	4	—		
	93F7804	Clip, for spray pipe	3	—		
		Attachments—Clip, Part No. 5, 10 & 14SS3859, 18SS3894 & 93F7084				
28D/9436920	A25/1C	Bolt, 2 BA	13	—	C	
28D/1200119	A25/4C	Bolt, 2 BA	2	—	C	
28D/9140645	A25/10C	Bolt, 2 BA	1	—	C	
28D/9435710	A25/11C	Bolt, 2 BA	2	—	C	
28M/1012015	AGS2001/C1/66	Nut, stiff, 2 BA	18	—	C	
28W/9419402	SP13/C	Washer	18	—	C	
	1727F9665	Conduit, forward nose rib 394	1	—		MC2/53
	1811F9665	Conduit, aft nose rib 394, port	1	—		MC2/54
	1812F9665	Conduit, aft nose rib 394, starboard	1	—		MC2/55
5K/1058168	SP40/A14	Grommet, for conduit	1	DTD556	C	MC2/56
5K/9512072	SP40/C14	Grommet, for conduit	1	DTD560	C	MC2/57
	AVICA LTD. 299F9665	HOSE, FLEXBILE, JOINT, OUTBOARD, OF INNER PORTION, GROUP	1	—		MC2/58
		MOUNTING, FIRE EXTINGUISHER BOTTLE, FOR L/E SPRAY PIPES, FRONT SPAR, PORT & STARBOARD. (1 & 2F7069)				
		Spares for:—				
	6Z7069	DISH, MOUNTING AND BOTTLE BRACKET, ASSEMBLY	1	—		MC2/59
		Spares for:—				
	5Z7069	Bracket, bottle	2	—		MC2/60

Ref. No.	Part No.	Description (1 2 3 4)	No. off	Matl. Spec.	Cl. of St. M.R.	Plate and Illust'n No.
		DISH, MOUNTING AND BOTTLE BRACKET, ASSEMBLY (Cont'd)				
	1Z6930	MOUNTING, DISH, GROUP	3	—	MR	MC2/61
		Spares for:—				
	3Z6930	Channel	—	—	MR	MC2/62
	4Z6930	Screw, for strap	—	—	MR	MC2/63
	5Z6930	Strap	—	—	MR	MC2/64
	7Z7069	MANIFOLD, FEED PIPE, PORT, ... GROUP	1	—	MR	MC2/65
6995	8Z7069	MANIFOLD, FEED PIPE, STB'D., ... GROUP	1	—		MC2/66
		MOUNTING OF ANTI-ICING ELEMENT IN L/E., PORT AND STARBOARD (1 & 2F10182)				
		Spares for:—				
27V/5273	TEDDINGTON FKA/A2	Element, sensing skin temperature	2	—	A	MC2/67
		Attachments—Element, Part No. FKA/A2				
28D/1007285	AS1242/1B	Bolt, c'sk. hd., 4BA	8	—	C	
28F/4051592	AGS1170/F	Nipple	1	—	C	MC2/68
28F/9486111	AGS1142/H	Nipple, adaptor	4	—	C	MC2/69
28F/9513420	AGS1142/J	Nipple, adaptor	7	—	C	MC2/70
28F/8011897	AGS1142/F	Nipple, adaptor	4	—	C	MC2/71
	34F9665/P	PANEL, ACCESS, BETWEEN RIBS ..... 240-257, TOP PORT, BOTTOM STB'D., GROUP (Pre-Mod. 2129)	1	—		MC5/72
143359	34F9665/EP	PANEL, ACCESS, BETWEEN RIBS ..... 240-257, TOP PORT, BOTTOM STB'D., GROUP (Mod. 2129)	1	—	C	MC5/73
	35F9665/P	PANEL, ACCESS, BETWEEN RIBS ..... 240-257, TOP STB'D., BOTTOM PORT, GROUP (Pre-Mod. 2129)	1	—		MC5/74
1433360	35F9665/EP	PANEL, ACCESS, BETWEEN RIBS ..... 240-257, TOP STB'D., BOTTOM PORT, GROUP (Mod. 2129)	1	—	C	MC5/75
		Attachments—Access Panels, Part Nos. 34 & 35F9665				
28D/1007975	AS1242/1C	Bolt, c'sk. hd., 2BA	18	—	C	
28D/1214091	AS1242/2C	Bolt, c'sk. hd., 2BA	14	—	C	
1432953	7F11754	PLATE, SEALING STRIP, UNDER ..... SURFACE F/S., PORT, GROUP	1	—	C	MC5/76
1432954	8F11754	PLATE, SEALING STRIP, UNDER ..... SURFACE F/S., STB'D., GROUP	1	—	C	MC5/77
	39F11754	Plate, reinforcing, under surface front ... spar, port (Pre-Mod. 2081)	2	—		
	40F11754	Plate, reinforcing, under surface front ... spar, stb'd. (Pre-Mod. 2081)	2	—		
	41F11754	Plate, reinforcing, under surface front ... spar, port (Pre-Mod. 2081)	1	—		

Ref. No.	Part No.	Description (1 2 3 4)	No. off	Matl. Spec.	Cl. of St. M.R.	Plate and Illust'n No.
		EDGE, LEADING, PORT AND STB'D., GROUP (1801, 1802, 2031, 2032, 2033, 2034, 2051 & 2052F9665) (Cont'd)				
	42F11754	Plate, reinforcing, under surface front spar, stb'd. (Pre-Mod. 2081)	1	—		
	59F11754	Plate, reinforcing, under surface front spar, port (Pre-Mod. 2081)	1	—		
	60F11754	Plate, reinforcing, under surface front spar, stb'd. (Pre-Mod. 2081)	1	—		
		Attachments—Plates, Part Nos. 7, 8, 39, 40, 41, 42, 59 & 60F11754				
	38F11754	Bolt, special	1	—		
	63F11754	Bolt, special	1	—		
	67F11754	Bolt, special	1	—		
	68F11754	Bolt, special	1	—		
	3e/SS4698	Bolt, mush. hd.	25	—	MR	
	7e/SS4698	Bolt, mush. hd.	46	—	MR	
1432997	8e/SS4698	Bolt, mush. hd.	10	—	C	
1432905	10e/SS4698	Bolt, mush. hd.	1	—	C	
1432999	7g/SS4698	Bolt, mush. h'd.	9	—	C	
		Bolt, mush. h'd.	4	—	C	
1433000	9g/SS4698	Bolt, mush. h'd.	2	—	C	
1433001	10g/SS4698	Bolt, mush. h'd.	3	—	C	
28M/9480017	AGS2001/E1/66	Nut, stiff, 1/4" BSF	QR	—	C	
28M/1202770	AGS2001/G/1	Nut, stiff, 5/16" BSF	QR	—	C	
28W/9419405	SP15/E	Washer, 1/4"	QR	—	C	
28W/9419476	SP15/G	Washer, 5/16"	QR	—	C	
		PLATES, REINFORCING, UNDER SURFACE F/S., PORT & STB'D. (1 & 2F12817) (Mod. 2081)				
		Spares for:—				
	3F12817	Plate, reinforcing	1	—		
	4F12817	Plate, reinforcing	1	—		
	5F12817	Plate, reinforcing	1	—		
	6F12817	Plate, reinforcing	1	—		
		Attachments—Plates, Part Nos. 3, 4, 5 & 6F12817				
	5c/SS4698	Bolt, mush. h'd.	17	—	MR	
	5e/SS4698	Bolt, mush. h'd.	14	—	MR	
1432996	6e/SS4698	Bolt, mush. h'd.	31	—	C	
	7e/SS4698	Bolt, mush. h'd	85	—	MR	
1432997	8e/SS4698	Bolt, mush. h'd.	10	—	C	
1432905	10e/SS4698	Bolt, mush. h'd.	2	—	C	
1432906	5g/SS4698	Bolt, mush. h'd.	5	—	C	
1432998	6g/SS4698	Bolt, mush. h'd.	16	—	C	
1432999	7g/SS4698	Bolt, mush. h'd.	7	—	C	
1433000	9g/SS4698	Bolt, mush. h'd.	4	—	C	
1433001	10g/SS4698	Bolt, mush. h'd.	5	—	C	
	3F12867	Plate, reinforcing, port (Mod. 2199)	1	—		
	5F12867	Plate, packing, port (Mod. 2199)	1	—		
	7F12867	Plate, packing, port (Mod. 2199)	1	—		
	4F12867	Plate, reinforcing, stbd. (Mod. 2199)	1	—		
	6F12867	Plate, packing, stbd. (Mod. 2199)	1	—		
	8F12867	Plate, packing, stb'd. (Mod. 2199)	1	—		

Ref. No.	Part No.	Description (1 2 3 4)	No. off	Matl. Spec.	Cl. of St. M.R.	Plate and Illust'n No.
		EDGE, LEADING, PORT & STB'D., GROUP (1801, 1802, 2031, 2032, 2033, 2034, 2051 and 2052F9665 (Cont'd.)				
	3F12908	Plate, reinforcing, port (Mod. 2221)	1	—		
	5F12908	Plate, reinforcing, port (Mod. 2221)	1	—		
	4F12908	Plate, reinforcing, stbd. (Mod. 2221)	1	—		
	6F12908	Plate, reinforcing, stbd. (Mod. 2221)	1	—		
	141F8624	PIPE, SPRAY, INBOARD, PORT, GROUP	1	—		MC2/78
	142F8624	PIPE, SPRAY, INBOARD, STBD'D., GROUP	1	—		MC2/79
	143F8624	PIPE, SPRAY, CENTRE, PORT, GROUP	1	—		MC2/80
	144F8624	PIPE, SPRAY, CENTRE, STB'D., GROUP	1	—		MC2/81
	153F8624	PIPE, SPRAY	1	—		MC2/82
	298F8642	PIPE, SPRAY, PORT	1	—		MC2/83
	297F8624	PIPE, SPRAY, STB'D.	1	—		MC2/84
		SPAR, FRONT, OUTER WING, INNER PORTION, PORT AND STARBOARD (1 & 2F9856)	—	—		MC3/85
		Spares for:—				
	200D9856	BOOM, TOP, PORT, GROUP	1	—		MC3/86
	201F9856	BOOM, TOP, STARBOARD, GROUP	1	—		MC3/87
		Spares for:—				
8267	127F9609	Bolt, special	1	S99	MR	MC3/88
	245F9856	BOOM, TOP, INBOARD, PORT GROUP	1	—		MC3/89
	246F9856	BOOM, TOP, INBOARD, STARBOARD, GROUP	1	—		MC3/90
		Spares for:—				
17200	9F9856	Boom, top, port	1	—		MC3/91
17201	10F9856	Boom, top, starboard	1	—		MC3/92
	101F8487	Bracket, attachment, u/c, top rib 338, port	1	DTD364B	MR	MC3/93
	102F8487	Bracket, attachment, u/c, top rib, starboard	1	DTD364B	MR	MC3/94
		Attachments—Bracket, Part Nos. 101 & 102F8487				
28D/9435059	A59/21J	Bolt, 3/8" BSF	6	—	C	
28D/1213599	A59/22E	Bolt, 1/4" BSF	2	—	C	
28M/1011473	A27/JP	Nut, 3/8" BSF	4	—	C	
28M/4095908	A27/JC	Nut, castellated, 3/8" BSF	2	—	C	
28M/9512070	A27/EC	Nut, castellated, 1/4" BSF	2	—	C	
28P/9527619	SP90/C7	Pin, split, 1/16" dia.	4	—	C	
28W/9419466	SP13/J	Washer, 3/8"	6	—	C	
28W/9418921	SP13/E	Washer, 1/4"	2	—	C	
	102F7502	Washer, special	1	—		
	103F7502	Washer, special	1	—		
	278F8505	Bush	1	S96 or T60	MR	MC3/95
6480	184F9856	Bush, lining	1	S96	C	MC3/96
3935	13F8584	Nut, special	1	—		MC3/97

Ref. No.	Part No.	Description (1 2 3 4)	No. off	Matl. Spec.	Cl. of St. M.R.	Plate and Illust'n No.
		BOOM, TOP, PORT AND STARBOARD, GROUP (200 & 201F9856) (Cont'd.)				
	37F8775	Plate, reinforcing, top boom forward face, port (Pre Mod. 2488)	1	S99		
	7F13485	Plate, reinforcing, top boom, forward face, port (Mod. 2488)	1	—		
	38F8775	Plate, reinforcing, top boom, forward face, starboard (Pre-Mod. 2488)	1	S99		
	8F13485	Plate, reinforcing, top boom, forward face, starboard (Mod. 2488)	1	—		
	39F8775	Plate, reinforcing, top boom, aft face, port (Pre-Mod. 2488)	1	S99		
	9F13485	Plate, reinforcing, top boom, aft face port (Mod. 2488)	1	—		
	40F8775	Plate, reinforcing, top boom, aft face starboard (Pre-Mod. 2488)	1	S99		
	10F13485	Plate, reinforcing, top boom, aft face starboard (Mod. 2488)	1	—		
	20F8775	Plate, rubbing	2	L72		
		Attachments—Plates, Part Nos. 20, 37, 38, 39 & 40F8775				
28D/1011240	A25/5E	Bolt, 1/4" BSF (Pre Mod. 2488)	8	—	C	
23046	I.F13481	Bolt, special (Mod. 2488)	4	—	C	
28D/1212825	AS1242/4E	Bolt, csk. hd. 1/4" BSF (Pre-Mod. 2488)	4	—	C	
23047	2.F13481	Bolt, special (Mod. 2488)	2	—	C	
1072	21F7756	Pin, split)	6			
	SL5242	Plug) (Mod. 2488)	A/R			
	SP13G	Washer)	4			
	208F9856	Shackle, joint at rib 576, top boom aft port, fwd. stbd.	1	S96	MR	MC3/98
	209F9856	Shackle, joint at rib 576, top Boom, fwd. port, aft stbd.	1	S96	MR	MC3/99
		Attachments—Shackle, Part Nos. 208 & 209F9856				
28D/1213514	A59/15J	Bolt, 3/8" BSF	4	—	C	MC3/100
28D/1213675	A59/16L	Bolt, 7/16" BSF	2	—	C	MC3/101
	A59/17L	Bolt, 7/16" BSF	4	—		MC3/102
28D/1213681	A59/16N	Bolt, 1/2" BSF	2	—	C	MC3/103
28D/1227713	A59/25G	Bolt, 5/16" BSF	2	—	C	MC3/104
28M/1011473	A27/JP	Nut, 3/8" BSF	4	—	C	
28M/4095927	A27/LP	Nut, 7/16" BSF	6	—	C	
28M/1011477	A27/NP	Nut, 1/2" BSF	2	—	C	
28M/1006939	A27/GP	Nut, 5/16" BSF	2	—	C	
3939	17F7584	Washer, special, 3/8"	4	DTD610A	C	MC3/105
	215F9856	Washer, special, 3/8"	4	DTD130A		MC3/106
3938	27F7502	Washer, special, 7/16"	6	DTD364A	C	MC3/107
	216F9856	Washer, special, 7/16"	6	DTD130A		MC3/108
	214F9856	Washer, special, 1/2"	2	DTD130A		MC3/109
	218F9856	Washer, special, 1/2"	2	DTD130A		MC3/110
3940	25F7500	Washer, special, 5/16"	2	DTD364A	C	MC3/111
28W/9419488	SP16/G	Washer, 5/16"	2	—	C	MC3/112
	25F8775	Washer, special	1	DTD364A		MC3/113
	12F8584	Washer, special	1	S1	C	MC3/114

MAINPLANES

INNER MAINPLANES

Ref. No.	Part No.	Description (1 2 3 4)	No. off	Matl. Spec.	Cl. of St. M.R.	Plate and Illust'n No.
	202F9856	BOOM, BOTTOM, PORT, GROUP	1	—		MC3/115
	203F9856	BOOM, BOTTOM, STBD, GROUP	1	—		MC3/116
		Spares for:—				
8268	128F9609	Bolt, special	1	S99	MR/C	MC3/117
	247F9856	BOOM, BOTTOM, INBOARD, PORT GROUP	1	—		MC3/118
	248F9856	BOOM, BOTTOM, INBOARD, STARBOARD, GROUP	1	—		MC3/119
		Spares for:—				
12157	11F9856	Boom, bottom, port	1	—	A	MC3/120
12158	12F9856	Boom, bottom, starboard	1	—	A	MC3/121
3985	104F8487	Bracket, attachment, u/c bottom, rib 338, port	1	DTD364B	MR/C	MC3/122
3984	103F8487	Bracket, attachment, u/c bottom, rib 338, starboard	1	DTD364B	MR/C	MC3/123
		Attachments—Bracket Part Nos. 103 & 104F8487				
28D/9435059	A59/21J	Bolt, 3/8" BSF	2	—	C	
28D/19676	A59/22J	Bolt, 3/8" BSF	4	—	C	
28D/1213599	A59/22E	Bolt, 1/4" BSF	2	—	C	
28M/1011473	A27/JP	Nut, 3/8" BSF	4	—	C	
28M/4095908	A27/JC	Nut, castellated 3/8" BSF	2	—	C	
28M/9512070	A27/EC	Nut, castellated 1/4" BSF	2	—	C	
28P/9527619	SP90/C7	Pin, split, 1/16" dia.	4	—	C	
28W/9419966	SP13/J	Washer, 3/8"	6	—	C	
28W/9418921	SP13/E	Washer, 1/4"	2	—	C	
	102F7502	Washer, special	1	—		
	103F7502	Washer, special	1	—		
8264	279F8505	Bush	1	S96 or T60	C	MC3/124
6481	171F9857	Bush, lining	1	S96	C	MC3/125
3935	13F8584	Nut, special	1	—	C	MC3/126

Ref. No.	Part No.	Description 1 2 3 4	No. off	Matl. Spec.	Cl. of St. M.R.	Plate and Illust'n No.

Ref. No.	Part No.	Description (1 2 3 4)	No. off	Matl. Spec.	Cl. of St. M.R.	Plate and Illust'n No.
		BOOM, BOTTOM, PORT AND STARBOARD, GROUP (202 & 203F9856) (Cont'd.)				
	41F8775	Plate, reinforcing, bottom boom, forward face port (Pre-Mod. 2488)	1	S99		
	11F13485	Plate, reinforcing, bottom boom, forward face port (Mod. 2488)	1	—		
	42F8775	Plate, reinforcing, bottom boom, forward face, starboard (Pre-Mod. 2488)	1	S99		
	12F13485	Plate, reinforcing, bottom boom, forward face, starboard (Mod. 2488)	1	—		
	43F8775	Plate, reinforcing, bottom boom, aft face port	1	S99		
	44F8775	Plate, reinforcing, bottom boom, aft face starboard	1	S99		
	21F8775	Plate, rubbing	2	L72		
		Attachments—Part Nos. 21, 41, 42, 43 & 44F8775				
28D/1011240	A25/5E	Bolt, 1/4" BSF (Pre-Mod. 2488)	8	—	C	
28D/1212825	AS1242/4E	Bolt, csk. hd. 1/4" BSF (Pre-Mod. 2488)	4	—	C	
23046	I.F13481	Bolt, special (Mod. 2488)	2			
1072	21F7756	Pin, split)	2			
	SL5242	Plug) (Mod. 2488)	AR			
28W/9419403	SP13G	Washer)	2			
	210F9856	Shackle, joint at rib 576, bottom boom, aft port fwd. stbd.	1	S96		MC3/127
	211F9858	Shackle, joint at rib 576, bottom boom, fwd. port, aft, stbd.	1	—		MC3/128
		Attachments—Shackles, Part Nos. 210, and 211F9856				
28D/1213514	A59/15J	Bolt, 3/8" BSF	4	—	C	MC3/100
28D/1213675	A59/16L	Bolt, 7/16" BSF	2	—	C	MC3/101
	A59/17L	Bolt, 7/16" BSF	4	—		MC3/102
28D/1213681	A59/16N	Bolt, 1/2" BSF	2	—	C	MC3/103
28D/1227713	A59/25G	Bolt, 5/16" BSF	2	—	C	MC3/104
28M/1011473	A27/JP	Nut, 3/8" BSF	4	—	C	
28M/4095927	A27/LP	Nut, 7/16" BSF	6	—	C	
28M/1011477	A27/NP	Nutl 1/2" BSF	2	—	C	
28M/1006939	A27/GP	Nut, 5/16" BSF	2	—	C	
3939	17F7584	Washer, special, 3/8"	4	DTD610A	C	MC3/105
	215F9856	Washer, special, 3/8"	4	DTD130A		MC3/106
3938	27F7502	Washer, special, 7/16"	6	DTD364A	C	MC3/107
	216F9856	Washer, special, 7/16"	6	DTD130A		MC3/108
	214F9856	Washer, special, 1/2"	2	DTD130A		MC3/109
	218F9856	Washer, special, 1/2"	2	DTD130A		MC3/110
3940	25F7500	Washer, special, 5/16"	2	DTD364A	C	MC3/111
28W/9419488	SP16/G	Washer, 5/16"	2	—	C	MC3/112
	25F8775	Washer, special	1	DTD364A		MC3/113
	12F8584	Washer, special	1	S1	C	MC3/114

Ref. No.	Part No.	Description (1 2 3 4)	No. off	Matl. Spec.	Cl. of St. / M.R.	Plate and Illust'n No.
		SPAR, FRONT, OUTER WING, INNER PORTION, PORT AND STARBOARD (1 & 2F9856) (Cont'd)				
	57F9856	Bracket, attachment, rib 618, top port, bottom, starboard	1	DTD683		
	58F9856	Bracket, attachment, rib 618, bottom port, top, starboard	1	DTD683		
	33F9856	Bracket, attachment, forward front spar, port bottom, stb'd., top	1	DTD683		
	34F9856	Bracket, attachment, forward front spar, port top, stb'd., bottom	1	DTD683		
		Attachments—Bracket, Part Nos. 33, 34, 57 & 58F9856				
28D/1213680	A59/14N	Bolt, 1/2" BSF	4	—	C	
28M/1011477	A27/NP	Nut, 1/2" BSF	4	—	C	
28W/9419468	SP13/N	Washer, 1/2"	4	—	C	
	238F9856	Plate, cover, between stn's 422 and 436	1	DTD687		
		Attachments:—Cover Plate, Part No. 238F9856				
	4/SS4227	Bolt, special	4	S96		
28M/9480017	AGS2001/E/1	Nut, stiff, 1/4" BSF	4	—	C	
28W/9418921	SP13/E	Washer, 1/4"	4	—	C	
	239F9856	Plate, cover, between stn's 548 and 562	1	—		
		Attachments—Cover Plate, Part No. 239F9856				
28D/1212941	A61/3C	Bolt, 2 BA	4	—	C	
28W/9419454	SP10/C	Washer, 2 BA	4	—	C	
6479	160F9856	Plate, joint	1	—	C	MC3/129
26FP/13043	1SS3259	Plate, mod. record	1	—	C	
		Attachments—Plate, Part No. 1SS3259				
	BS57/32	Screw	4	—		
26FP/13044	1SS3260	Plate, serial	1	—	C	
	251F9856	WEB, FRONT SPAR, PORT, GROUP	1	—		
	252F9856	WEB, FRONT SPAR, STB'D., GROUP	1	—		
		Spares for:—				
	19F7504	Plate, cover	4	—		
		Attachments—Cover Plate, Part No. 19F7504				
	AS2922/2C	Bolt, r'd. h'd., 2 BA	6	—		
28F/1011798	AGS1103/F	Union, body	1	—	C	MC2/130
28F/4051582	AGS1109/G	Union, reducing	2	—	C	MC2/131
28F/9439162	AGS1109/D	Union, reducing	2	—	C	MC2/132
		EDGE, TRAILING, PORT AND STB'D. (33 & 34F9722)	—	—		MC4/133
		Spares for:—				
	1F9870	BEARING, TRUNNION, FLYING CONTROLS, RIB 460.436, INNER, PORT, GROUP	1	—	MR	MC4/134

MAINPLANES

INNER MAINPLANES

Ref. No.	Part No.	Description (1 2 3 4)	No. off	Matl. Spec.	Cl. of St. M.R.	Plate and Illust'n No.
	2F9870	BEARING, TRUNNION, FLYING CONTROLS, RIB 460, 436, INNER, STARBOARD, GROUP	1	—	MR	MC4/135
		Spares for:—				
	7F9870	Housing, bearing	1	S96		MC4/136
		Attachments—Bearing Housing, Part No. 7F9870				
	8F8419	Bolt, special, 5/16"	4	S96	MR	MC4/137
28M/4199618	A27/GT	Nut, thin, 5/16" BSF	4	—	C	
28W/9419403	SP13/G	Washer, 5/16"	4	—	C	
	AS3360/G6C	Lead, bonding	1	—		
	3F9870	Member, bottom, port	1	—		
	4F9870	Member, bottom, starboard	1	—		
	5F9870	Member, top, port	1	—		
	6F9870	Member, top, starboard	1	—		
		Attachments—Trunnion Bearing, Part Nos. 1 & 2F9870				
	128F7500	Bolt, special	2	—	MR	MC4/138
	34F8636	Bolt, special	2	—	MR	MC4/139
28M/9512071	A27/GC	Nut, castellated, 5/16" BSF	4	—	C	
28P/9527619	SP90/C7	Pin, split, 1/16" dia.	4	—	C	
	25F7500	Washer, special	4	—	MR	
28W/9419403	SP13/G	Washer, 5/16"	4	—	C	
	1F9871	BEARING, TRUNNION, FLYING CONTROLS, RIB 492.186, OUTER PORT, GROUP	1	—	MR	MC4/140
	2F9871	BEARING, TRUNNION, FLYING CONTROLS, RIB 492.186, OUTER, STARBOARD, GROUP	1	—	MR	MC4/141
		Spares for:—				
	7F9871	Housing, bearing	1	—		MC4/142
		Attachments—Bearing Housing, Part No. 7F9871				
	8F8419	Bolt, special	4	—	MR	MC4/143
28M/1011471	A27/GT	Nut, thin, 5/16" BSF	4	—	C	
28W/9419403	SP13/G	Washer, 5/16"	4	—	C	
	AS3360/G6C	Lead, bonding	1	—		
	3F9871	Member, bottom, port	1	—		
	4F9871	Member, bottom, starboard	1	—		
	5F9871	Member, top, port	1	—		
	6F9871	Member, top, starboard	1	—		
		Attachments—Trunnion Bearing, Part No. 1 & 2F9871				
20753	129F7500	Bolt, special	2	—	C	MC4/144
	188F7500	Bolt, special	2	—	MR	MC4/145
28M/9512071	A27/GC	Nut, castellated, 5/16" BSF	4	—	C	
28P/9527619	SP90/C7	Pin, split, 1/16" dia.	4	—	C	
	25F7500	Washer, special	4	—	MR	
28W/9419403	SP13/G	Washer, 5/16"	4	—	C	
	77F7677	Hinge, port (Make from SS4138 x 15-1/4")	1	—		MC4/146
1150	78F7677	Hinge, stb'd. (Make from SS4138 x 15-1/4")	1	—	C	MC4/147
	26F9722	Hinge, port (Make from SS4138)	1	—		MC4/148
	27F9722	Hinge, stb'd (Make from SS4138)	1	—	MR	MC4/149
	39F7677	Hinge, port (Make from SS4138)	1	—	MR	MC4/150
1158	40F7677	Hinge, stb'd. (Make from SS4138)	1	—	C	MC4/151

Ref. No.	Part No.	Description 1 2 3 4	No. off	Matl. Spec.	Cl. of St. M.R.	Plate and Illust'n No.
		EDGE, TRAILING, PORT AND STB'D., (33 & 34F9722) (Cont'd)				
	97F7677	Hinge, port (Make from SS4138)	1	–		MC4/152
	98F7677	Hinge, stb'd. (Make from SS4138)	1	–	MR	MC4/153
	1F7762	PANEL, ACCESS DOOR, TRANSPORT . . . JOINT, BOTTOM, FRONT (LESS HINGE) PORT, GROUP	1	–		MC4/154
1146	2F7762	PANEL, ACCESS DOOR, TRANSPORT . . . JOINT, BOTTOM, FRONT (LESS HINGE) STARBOARD, GROUP	1	–	C	MC4/155
13677	25F7763	PANEL, ACCESS DOOR, TRANSPORT . . . JOINT, BOTTOM, REAR, PORT, GROUP (HINGE TO BE LEFT UNDRILLED)	1	–	A	MC4/156
13678	26F7763	PANEL, ACCESS DOOR, TRANSPORT . . . JOINT, BOTTOM, REAR, STARBOARD, GROUP (HINGE TO BE LEFT UNDRILLED)	1	–	A	MC4/157
		Spares for:–				
	17F7763	Hinge, port (Make from SS4138 x 11-1/4")	1	–	MR	MC4/158
	18F7763	Hinge, stb'd. (Make from SS4138 x . . . . . 11-1/4") (26DC12003)	1	–	MR	MC4/159
6518	1F9869	PANEL, ACCESS DOOR, BOTTOM, ... INBOARD POWER UNIT BAY (LESS HINGE) PORT, GROUP	1	–	A	MC4/160
6519	2F9869	PANEL, ACCESS DOOR, BOTTOM, ... INBOARD POWER UNIT BAY (LESS HINGE) STARBOARD, GROUP	1	–	A	MC4/161
6523	29F9722	PANEL, ACCESS, TO FLYING CONTROLS, RIB 618, TOP, PORT, GROUP	1	–	C	MC4/162
6524	30F9722	PANEL, ACCESS, TO FLYING CONTROLS, RIB 618, TOP, STB'D., GROUP	1	–	C	MC4/163
6525	31F9722	PANEL, ACCESS, TO FLYING CONTROLS, RIB 618, BOTTOM, PORT, GROUP	1	–	C	MC4/164
6526	32F9722	PANEL, ACCESS, TO FLYING CONTROLS, RIB 618, BOTTOM, STB'D., GROUP	1	–	C	MC4/165
1133	1F7686	PANEL, SHROUD, BOTTOM, INBOARD, . ELEVATOR, PORT, GROUP	1	–	A	MC4/166
1134	2F7686	PANEL, SHROUD, BOTTOM, INBOARD . ELEVATOR, STB'D., GROUP	1	–	A	MC4/167
	1F9865	PANEL, SHROUD, BOTTOM, OUTBOARD ELEVATOR, PORT, GROUP	1	–		MC4/168
6522	2F9865	PANEL, SHROUD, BOTTOM, OUTBOARD ELEVATOR, STB'D., GROUP	1	–	C	MC4/169

Ref. No.	Part No.	Description (1 2 3 4)	No. off	Matl. Spec.	Cl. of St. / M.R.	Plate and Illust'n No.
		EDGE, TRAILING, PORT AND STB'D., (33 & 34F9722) (Cont'd)				
		Attachments—Panels, Part Nos. 1 & 2F7762, 25 & 26F7763, 1 & 2F9869, 29, 30, 31 & 32F9722, 1 & 2F7686 and 1 & 2F9865				
	1SS4140	Screw	QR	—	MR	MC4/170
	2SS4140	Screw	QR	—	MR	MC4/171
	12SS4140	Screw	QR	—	MR	MC4/172
	13SS4140	Screw	QR	—	MR	MC4/173
	17SS4140	Screw	1	—	MR	MC4/174
26FP/13043	1SS3259	Plate, mod record	1	—	C	
		Attachments—Plate, Part No. 1SS3259				
28S/1012450	A32/B10	Screw, rd. hd. 4 BA	4	—	C	
26FP/13044	1SS3260	Plate, serial	1	—	C	
	1F9862	RIB, HINGE, CENTRE ELEVATOR, PORT, GROUP	1	—		MC4/175
	2F9862	RIB, HINGE, CENTRE ELEVATOR, STARBOARD, GROUP	1	—		MC4/176
		Spares for:—				
1505372	11F9862	Bracket, hinge, port	1	—	C	MC4/177
1505373	12F9862	Bracket, hinge, starboard	1	—	C	MC4/178
		Attachments—Bracket, Part Nos. 11 & 12F9862				
	39F9862	Bolt, special	2	S96		MC4/179
	47F9862	Bolt, special	2	S96		MC4/180
	48F9862	Bolt, special	4	S96		MC4/181
	49F9862	Bolt, special	6	S96		MC4/182
	50F9862	Bolt, special	3	S96		MC4/183
	51F9862	Bolt, special	1	S96		MC4/184
28M/1007404	A27/JT	Nut, thin, 3/8" BSF	2	—	C	
28M/4095917	A24/JS	Nut, slotted, 3/8" BSF	6	—	C	
28M/4095898	A24/QS	Nut, slotted, 5/8" BSF	10	—	C	
28P/9527619	SP90/C7	Pin, split, 1/16" dia.	6	—	C	
28P/1221023	SP90/G12	Pin, split, 1/8" dia.	10	—	C	
	2/SS5027	Washer, special	8	—		MC4/185
	29F7761	Washer, special	10	—	MR	MC4/186
28W/9419470	SP13/Q	Washer, 5/8"	14	—	C	
28W/9419493	SP16/Q	Washer, 5/8"	10	—	C	
	21F9862	Housing	1	S96		
	22F9862	Housing	1	S96		
		Attachments—Housing, Part Nos. 21 & 22F9862				
1432659	55F7688	Bolt, special	6	—	C	
28M/1006939	A27/GP	Nut, 5/16" BSF	6	—	C	
28W/9419403	SP13/G	Washer, 5/16"	6	—	C	

Ref. No.	Part No.	Description (1 2 3 4)	No. off	Matl. Spec.	Cl. of St. M.R.	Plate and Illust'n No.
		EDGE, TRAILING, PORT AND STB'D. (33 & 34F9722) (Cont'd)				
		SPAR, REAR, OUTER WING, INNER PORTION, PORT AND STARBOARD (109 & 110F9893) (Pre Mod. 1106)				MC5/187
		SPAR, REAR, OUTER WING, INNER PORTION, PORT AND STARBOARD (139 & 140F9893) (Mod. 1106) (S.O.O.)				MC5/188
		Spares for:—				
	3F9893	**Boom,** top, port (Pre Mod. 1106) ...	1	DTD363A	MR	
	141F9893	**Boom,** top, port (Mod. 1106) ...	1	DTD363A	MR	
	4F9893	**Boom,** top, starboard (Pre Mod. 1106)	1	DTD363A	MR	
	142F9893	**Boom,** top, starboard (Mod. 1106) ...	1	DTD363A	MR	
	5F9893	**Boom,** bottom, port (Pre Mod. 1106)	1	DTD363A	MR	
	143F9893	**Boom,** bottom, port (Mod. 1106) ...	1	DTD363A	MR	
	6F9893	**Boom,** bottom, starboard (Pre Mod. 1106)	1	DTD363A	MR	
	144F9893	**Boom,** bottom, starboard (Mod. 1106)	1	DTD363A	MR	
	3F9941	**Bracket,** top, boom, aft face, port ...	1	DTD683	MR	
	4F9941	**Bracket,** top boom, aft face, stb'd ...	1	DTD683	MR	
	31F9893	**Bracket,** top boom, forward face, inboard, port	1	DTD683	MR	
	32F9893	**Bracket,** top boom, forward face, inboard, starboard	1	DTD683	MR	
	35F9893	**Bracket,** top boom, forward face, outboard, port, bottom boom outboard, starboard	1	DTD683	MR	
	36F9893	**Bracket,** top boom, forward face, outboard, starboard, bottom boom outboard, port	1	DTD683	MR	
	5F9941	**Bracket,** bottom boom, aft face, port	1	DTD683	MR	
	6F9941	**Bracket,** bottom boom, aft face starboard	1	DTD683	MR	
	33F9893	**Bracket,** bottom boom, forward face, inboard, port	1	DTD683	MR	
	34F9893	**Bracket,** bottom boom, forward face, inboard, starboard	1	DTD683	MR	
		Attachments – Bracket, Part Nos. 3, 4, 5 & 6F9941, 31, 32, 33, 34, 35 & 36F9893				
	37F9893	**Bolt,** special	3	—		MC5/189
	113F9893	**Bolt,** special	1	—		MC5/190
	38F9893	**Nut,** special	4	—		
28P/19159	SP90/H15	**Pin,** split, $\frac{5}{32}$" dia	4	—	C	
28W/9419471	SP13/S	**Washer,** $\frac{3}{8}$"	4	—	C	
3873	28F7753	**Washer,** special	4	—	C	MC5/191

MAINPLANES

INNER MAINPLANES

Ref. No.	Part No.	1 2 3 4	Description	No. off	Matl. Spec.	Cl. of St. M.R.	Plate and Illust'n No.
			SPAR, REAR, OUTER WING, INNER PORTION, PORT AND STARBOARD (109 & 110F9893 or 139 & 140F9893) (Pre & Post Mod. 1106) (Cont'd)				
	15F9862		**Bracket,** top boom, aft face, port ...	1	DTD683	MR	
	16F9862		**Bracket,** top boom, aft face, stb'd ...	1	DTD683	MR	
	27F9893		**Bracket,** top boom, forward face, port	1	DTD683	MR	
	28F9893		**Bracket,** top boom, forward face, starboard	1	DTD683	MR	
	13F9862		**Bracket,** bottom boom, aft face, port	1	DTD683	MR	
	14F9862		**Bracket,** bottom boom, aft face, starboard	1	DTD683	MR	
	29F9893		**Bracket,** bottom boom, forward face, port	1	DTD683	MR	
	30F9893		**Bracket,** bottom boom, forward face, starboard	1	DTD683	MR	
			Attachments – Bracket, Part Nos. 13, 14, 15 & 16F9862, 27, 28, 29 & 30F9893				
	114F9893		**Bolt,** special	3	—		MC5/192
	92F9893		**Bolt,** special	2	—		MC5/193
	93F9893		**Bolt,** special	1	—		MC5/194
28M/4199648	A27/SC		**Nut,** castellated, $\frac{3}{4}$" BSF	3	—	C	
28M/4199664	A27/UC		**Nut,** castellated, $\frac{7}{8}$" BSF	2	—	C	
	A27/WC		**Nut,** castellated, 1" BSF	1	—		
28P/12408	SP9/K16		**Pin,** split, $\frac{3}{16}$" dia	5	—	C	
28P/1202464	SP9AK18		**Pin,** split, $\frac{3}{16}$" dia	1	—	C	
28W/9419471	SP13/S		**Washer,** $\frac{3}{4}$"	3	—	C	
3873	28F7753		**Washer,** special	3	—	C	MC5/195
28W/9419429	SP13/U		**Washer,** $\frac{7}{8}$"	2	—	C	
3871	19F7756		**Washer,** special	1	—	C	MC5/196
28W/9419472	SP13/W		**Washer,** 1"	1	—	C	
	24F7753		**Washer,** special	1	—		MC5/197
	39F9893		**Bracket,** top boom, aft face, inboard, port, bottom boom, inboard, starboard	1	DTD683	MR	
	40F9893		**Bracket,** top boom, aft face inboard,, starboard, bottom boom inboard, port	1	DTD683	MR	
	41F9893		**Bracket,** top boom, aft face, outboard, port, bottom boom, outboard, starboard	1	DTD683	MR	
	..42F9893		**Bracket,** top boom, aft face, outboard, starboard, bottom boom outboard, port	1	DTD683	MR	
	19F9893		**Bracket,** top boom, forward face, inboard, port	1	DTD683	MR	

Ref. No.	Part No.	1 2 3 4	Description	No. off	Matl. Spec.	Cl. of St. / M.R.	Plate and Illust'n No.
			SPAR, REAR, OUTER WING, INNER PORTION, PORT AND STARBOARD (109 & 110F9893 or 139 & 140F9893) (Pre & Post Mod. 1106) (Cont'd)				
	20F9893		**Bracket,** top boom, forward face, inboard, starboard	1	DTD683	**MR**	
	137F9893		**Bracket,** top boom, forward face, outboard, port	1	DTD683	**MR**	
	138F9893		**Bracket,** top boom, forward face, outboard, starboard	1	DTD683	**MR**	
	95F9893		**Bracket,** bottom boom, forward face, inboard, port	1	DTD683	**MR**	
	96F9893		**Bracket,** bottom boom, forward face, inboard, starboard	1	DTD683	**MR**	
	97F9893		**Bracket,** bottom boom, forward face, outboard, port	1	DTD683	**MR**	
	98F9893		**Bracket,** bottom boom, forward face, outboard, starboard	1	DTD683	**MR**	
			Attachments—Bracket, Part Nos. 19, 20, 39, 40, 41, 42, 95, 96, 97, 98, 137 & 138F9893				
	89F9893		**Bolt,** special	2	—		MC5/198
	90F9895		**Bolt,** special	2	—		MC5/199
28M/4199664	A27/UC		**Nut,** castellated, $\frac{1}{8}$" BSF	4	—	**C**	
28P/19159	SP90/H15		**Pin,** split, $\frac{3}{32}$" dia.	4	—	**C**	
28W/9419429	SP13/U		**Washer,** $\frac{7}{8}$"	4	—	**C**	
3871	19F7756		**Washer,** special	4	—	**C**	MC5/200
	347F9893		**Bush,** spar joint inboard, top and bottom boom	2	S96	**MR**	MC5/201
6487	111F9893		**Bush,** spar joint, top boom	4	S96	**MR/C**	MC5/202
	112F9893		**Bush,** spar joint, bottom boom ...	4	S96	**MR**	MC5/203
	125F9893		**Plate,** reinforcing, aft face, spar joint, inboard top, port	1	S99	**MR**	
	126F9893		**Plate,** reinforcing, aft face, spar joint inboard, top, starboard	1	S99	**MR**	
	127F9893		**Plate,** reinforcing, forward face, spar joint inboard top, port	1	S99	**MR**	
	128F9893		**Plate,** reinforcing, forward face, spar joint, inboard top, starboard	1	S99	**MR**	
	129F9893		**Plate,** reinforcing, aft face, spar joint, inboard, bottom, port	1	S99	**MR**	
	103F9893		**Plate,** reinforcing, aft face, spar joint, inboard, bottom, starboard	1	S99	**MR**	
	131F9893		**Plate,** reinforcing, forward face, spar joint, inboard, bottom, port	1	S99	**MR**	

MAINPLANES

INNER MAINPLANES

Ref. No.	Part No.	Description (1 2 3 4)	No. off	Matl. Spec.	Cl. of St. / M.R.	Plate and Illust'n No.
		SPAR, REAR, OUTER WING, INNER PORTION, PORT AND STARBOARD (109 & 110F9893 or 139 & 140F9893) (Pre & Post Mod. 1106) (Cont'd)				
	132F9893	**Plate,** reinforcing, forward face, spar joint, inboard, bottom, stb'd.	1	S99	**MR**	
		Attachments—Plates, Part Nos. 125, 126, 127, 128, 129, 130, 131 & 132F9893				
28D/1218444	AS1242/1E	**Bolt,** c'sk. hd., $\frac{1}{4}$" BSF	8	—	**C**	
28D/1202334	AS1242/3E	**Bolt,** c'sk. hd., $\frac{1}{4}$" BSF	8	—	**C**	
		Note :—Reinforcing plates require to be lined up to the spar, ground and reamed if necessary, and thence to be cadmium plated before final fitment.				
26FP/13043	1SS3259	**Plate,** mod record	1	—	**C**	
		Attachments—Plate, Part No. 1SS3259				
28D/1007979	AS1246/1B	**Bolt,** mush. hd. 4 BA	4	—	**C**	
26FP/13044	1SS3260	**Plate,** serial	1	—	**C**	
		Attachments, Rear spar, Part No. 109 & 110 or 139 & 14F9893				
	A60/7L	**Bolt,** $\frac{7}{16}$" BSF	8	—		
28D/20434	A60/8L	**Bolt,** $\frac{7}{16}$" BSF	8	—	**C**	
28D/1213580	A60/9L	**Bolt,** $\frac{7}{16}$" BSF	4	—	**C**	
	A60/10L	**Bolt,** $\frac{7}{16}$" BSF	4	—		
28D/20184	A59/7J	**Bolt,** $\frac{3}{8}$" BSF	8	—	**C**	
	16SS4365	**Bolt,** special	2	—		MC5/204
	15SS4365	**Bolt,** special	2	—		MC5/205
	14SS4365	**Bolt,** special	4	—		MC5/206
	13SS4365	**Bolt,** special	4	—		MC5/207
	12SS4365	**Bolt,** special	6	—		MC5/208
28M/4199639	A58/LT	**Nut,** thin, $\frac{7}{16}$" BSF	16	—	**C**	
28M/4095906	A24/LC	**Nut,** castellated, $\frac{7}{16}$" BSF	8	—	**C**	
28M/4095940	A24/JC	**Nut,** castellated, $\frac{3}{8}$" BSF	8	—	**C**	
28M/4095886	A27/PT	**Nut,** thin, $\frac{9}{16}$" BSF	18	—	**C**	
28P/1202572	SP90/E9	**Pin,** split, $\frac{3}{32}$" dia.	8	—	**C**	
28P/9527619	SP90/C7	**Pin,** split, $\frac{1}{16}$" dia.	8	—	**C**	
28W/9419467	SP13/L	**Washer,** $\frac{7}{16}$"	32	—	**C**	
28W/9419466	SP13/J	**Washer,** $\frac{3}{8}$"	8	—	**C**	
28W/9419469	SP13/P	**Washer,** $\frac{9}{16}$"	18	—	**C**	
	26F7761	**Washer,** special	16	—		MC5/209
	21F7698	**Washer,** special	8	—		MC5/210
	17F7584	**Washer,** special	8	—		MC5/211
	46F7564	**Washer,** special	18	—	**MR**	MC5/212
		ELECTRICS, IN WING, PORT AND STARBOARD				
		(See :—Electrical Installation) (1 & 2V8061)				

Ref. No.	Part No.	Description (1 2 3 4)	No. off	Matl. Spec.	Cl. of St. M.R.	Plate and Illust'n No.
		MAINPLANE, INNER PORTION, PORT AND STARBOARD, GROUP (21, 22, 157 & 158F9701) (Mod. 1106 & 2129) (Cont'd)				
7801	83F8663	FAIRING, U/C FIXED, OUTBOARD, PORT, GROUP	1	–	A	MC6/213
7802	84F8663	FAIRING, U/C FIXED, OUTBOARD, STARBOARD, GROUP	1	–	A	MC6/214
		Spares for:–				
12911	95F8663	BRACKET, PORT, GROUP	1	–	C	MC6/215
12912	96F8663	BRACKET, STARBOARD, GROUP	1	–	C	MC6/216
	97F8663	BRACKET, PORT, GROUP	1	–	MR	MC6/217
12920	98F8663	BRACKET, STARBOARD, GROUP	1	–	C	MC6/218
		Attachments–Bracket, Part Nos. 95, 96, 97 & 98F8663				
28D/1007972	A25/1/2C	Bolt, 2 BA	2	–	C	
28D/9436920	A25/1C	Bolt, 2 BA	6	–	C	
28M/1012015	AGS2001/C1/66	Nut, stiff, 2 BA	8	–	C	
28W/9419475	SP15/C	Washer, 2 BA	8	–	C	
27F/4526675	AVERY HARDOLL FC109	Cap, blanking and cable	2	–	C	
	FLIGHT REFUELLING 0724000/48	Chain, retaining	2	–		
		CONNECTION, REFUELLING, MICRO SWITCH, PORT SIDE ONLY (Z7479)				
		Spares for:–				
13615	8Z7479	Arm, pivot	1	L65	C	MC6/219
		Attachments–Pivot Arm, Part No. 8Z7479				
28D/9436920	A25/1C	Bolt, 2 BA	3	–	C	
28M/1012015	AGS2001/C1/66	Nut, stiff, 2 BA	3	–	C	
28W/94199475	SP15/C	Washer, 2 BA	3	–	C	
	2Z7479	Bracket	1	DTD610A	MR	MC6/220
	3Z7479	Bracket	1	DTD610A		MC6/221
	4Z7479	LEVER, CONTACT, GROUP	1	–	MR	MC6/222
		Spares for:–				
	4bZ7479	Bolt, contact	1	S1	MR	MC6/223
28M/1006473	A27/CT	Nut, 2 BA	1	–	C	
		Attachments–Lever, Part No. 4Z7479				
28N/1045680	AGS899/2	Collar	1	–	C	MC6/224
28P/4668903	SP4/Y/B20	Pin	1	–	C	MC6/225
28P/9710567	SP90/C4	Pin, split, 1/16" dia.	1	–	C	
	6Z7479	LEVER, OPERATING ROD, GROUP	1	–	MR	MC6/226
		Spares for:–				
	6cZ7479	Knob	1	–		MC6/227
		Attachments–Knob, Part No. 6cZ7479				
	AS1243/11C	Bolt, c'sk. h'd. 2 BA	1	–		
28M/4095802	AGS2001/C/3	Nut, stiff, 2 BA	1	–	C	
28W/9419475	SP15/C	Washer, 2 BA	1	–	C	

Ref. No.	Part No.	Description (1 2 3 4)	No. off	Matl. Spec.	Cl. of St. M.R.	Plate and Illust'n No.
		CONNECTION, REFUELLING, MICRO SWITCH, PORT SIDE ONLY (Z7479) (Cont'd.)				
		Attachments—Lever, Part No. 6Z7479				
28M/4095802	AGS2001/C/3	Nut, stiff, 2 BA	1	—	C	
28W/9419475	SP15/C	Washer, 2 BA	1	—	C	
	5Z7479	ROD, OPERATING, GROUP	1	—	MR	MC6/228
		Spares for:—				
	5bZ7479	Fork-end	1	L65	MR	MC6/229
	5cZ7479	Fork-end	1	L65	MR	MC6/230
28M/1007403	A27/ET	Nut, thin, 1/4" BSF	1	—	C	
28M/4095923	A27/ETL	Nut, thin, 1/4" BSF	1	—	C	
	5dZ7479	Rod-end	1	S1		
	5eZ7479	Rod-end	1	S1		
		Attachments—Rod, Part No. 5Z7479				
28N/1045680	AGS899/2	Collar	2	—	C	MC6/231
28P/1207865	SP4/Y/B5	Pin	1	—	C	MC6/232
28P/1012221	SP4/Y/B12	Pin	1	—	C	MC6/233
28P/9710567	SP90/C4	Pin, split, 1/16" dia.	2	—	C	
	7Z7479	Spring, 17g	1	—	MR	MC6/234
		Attachments—Spring, Part No. 7Z7479				
28D/9436920	A25/1C	Bolt, 2 BA	1	—	C	
28D/9133013	A25/5C	Bolt, 2 BA	1	—	C	
28M/1012015	AGS2001/C1/66	Nut, stiff, 2 BA	2	—	C	
28W/9419475	SP15/C	Washer, 2 BA	2	—	C	
5CW/ 4400327	DOWTY C1831Y/MK101	Switch, micro	1	—	B	MC6/235
		Attachments—Micro Switch Part No. C1831Y/MK1				
28D/9133014	A25/13C	Bolt, 2 BA	3	—	C	
28M/1012015	AGS2001/C1/66	Nut, stiff, 2 BA	3	—	C	
28W/9419475	SP15/C	Washer, 2 BA	3	—	C	
	4SS4225	Label, air transfer, port	1	—		
	5SS4225	Label, air transfer, starboard	1	—		
	6SS4225	Label, air transfer	1	—		
26FP/13270	5SS1979	LEAD, BONDING, GROUP	4	—		
	39F8663	Pad, stop	2	—	MR	MC6/236
11329	3F8663	PANEL, HONEYCOMB SECTION, PORT, GROUP	1	—	B	MC6/237
11700	4F8663	PANEL, HONEYCOMB SECTION, STARBOARD, GROUP	1	—	B	MC6/238
		Spares for:—				
	31cF8663	Seal, .63" x 12"	1	Linatex		
	31eF8663	Strip, retaining, port	1	L72		
	32eF8663	Strip, retaining, starboard	1	L72		
		Attachments—Seal and Strips Part Nos. 31e, 31e & 32eF8663				
28D/1007285	AS1242/1B	Bolt, c'sk h'd 4 BA	5	—	C	

Ref. No.	Part No.	Description 1 2 3 4	No. off	Matl. Spec.	Cl. of St. / M.R.	Plate and Illust'n No.
		FAIRING, U/C. FIXED, OUTBOARD, PORT AND STARBOARD, GROUP (83 & 84F8663) (Cont'd)				
		Attachments—Access Panels, Part Nos. 85 & 86F8663				
28D/1214091	AS1242/2C	Bolt, c'sk. h'd., 2 BA	5	—	C	
1947	3F8842	PANEL, ACCESS DOOR, REFUELLING COCK, PORT (HINGE UNDRILLED), GROUP	1	—	C	MC6/239
1948	4F8842	PANEL, ACCESS DOOR, REFUELLING COCK, STARBOARD (HINGE UNDRILLED), GROUP	1	—	C	MC6/240
		Spares for:—				
	101F8663	FASTENER, GROUP	2	—	MR	MC6/241
		Consisting of:—				
	AJ7/150	Fastener, "Dzus"	1	—		
	GS/A7/T/490	Grommet	1	—		
	3mF8842	Hinge	1	—		MC6/242
	3fF8842	Seal, section K0118 x .63" x 21"	1	Linatex		MC6/243
	3pF8842	Strip, retaining, port	1	—		MC6/244
	4pF8842	Strip, retaining, starboard	1	—		MC6/245
		Attachments—Seal and Strip Part Nos. 3f, 3p and 4p F8842				
28D/1214091	AS1242/2C	Bolt, c'sk. h'd., 2 BA	5	—	C	
	24F8663	Seal, section, K0118 x .63" x 2' 6"	1	Linatex	MR	MC6/246
	67F8663	Seal, .63" x 6.7"	1	Linatex	MR	MC6/247
		Attachments—Seals, Part Nos. 24 and 67F8663				
28D/1218384	AS1248/1B	Bolt, mush. hd., 4 BA	12	—	C	
28W/9419474	SP15/B	Washer, 4 BA	12	—	C	
	10Z7479	Spring, contact	4	BS407	MR	MC6/248
		Attachments—Contact Spring, Part No. 10Z7479				
28D/9133011	A25/2C	Bolt, 2 BA	1	—	C	
28M/1012015	AGS2001/C1/66	Nut, stiff, 2 BA	1	—	C	
28W/9419475	SP15/C	Washer, 2 BA	1	—	C	
	S7/275	Spring, "Dzus"	2	—	C	
	68F8663	Strip, retaining	1	L72		
	23F8663	Strip, retaining, port	1	L72		
	40F8663	Strip, retaining, starboard	1	L72		
27FR/2763	AVERY HARDOLL FC248MK11 or FC248	Unit, refuelling coupling (Pre-Mod. 2356)	2	—	A	MC6/249
27FR/1040683	FLIGHT REFUELLING 075000/4	Unit, refuelling coupling (Mod. 2356)	2	—	A	

Ref. No.	Part No.	Description 1 2 3 4	No. off	Matl. Spec.	Cl. of St. / M.R.	Plate and Illust'n No.
		MAINPLANE, INNER PORTION, PORT AND STARBOARD, GROUP (21, 22, 157 & 158F9701) (Mod. 1106 & 2129) (Cont'd)				
		FIRE EXTINGUISHER SYSTEM IN FUEL TANK BAYS, PORT AND STARBOARD (1 & 2Z9144) (See Services—Fire Extinguisher)				
		FLAME CORDS, PORT AND STARBOARD (1 & 2Z9235) (See Services—Fire Extinguisher)				
		FUEL SYSTEM, PORT AND STARBOARD (1 & 2P3277) (See Services—Fuel Installation)				

Ref. No.	Part No.	Description 1 2 3 4	No. off	Matl. Spec.	Cl. of St. M.R.	Plate and Illust'n No.
27QM/70913	DOWTY 1.01297.003	JACK, HYDRAULIC, U/C DOOR, FRONT ..... PORT (Mod. 1796) (Pre-Mod. 2491)	1	—		
27QM/1491730	DOWTY 1.01297.005	JACK, HYDRAULIC, U/C DOOR, FRONT, ... PORT (Mod. 2491)	1	—		
27QM/70914	DOWTY 1.01297.004	JACK, HYDRAULIC, U/C DOOR, FRONT, ... STARBOARD (Mod. 1796) (Pre-Mod. 2491)	1	—		
27QM/1491733	DOWTY 1.01297.006	JACK, HYDRAULIC, U/C DOOR, FRONT, ... STARBOARD (Mod. 2491)	1	—		
27QM/70885	DOWTY 1.01298.003	JACK, HYDRAULIC, U/C DOOR, REAR, ... PORT (Mod. 1769) (Pre-Mod. 2491)	1	—		
27QM/1491731	DOWTY 1.01298.005	JACK, HYDRAULIC, U/C DOOR, REAR, ... PORT (Mod. 2491)	1	—		
27QM/70917	DOWTY 1.01298.004	JACK, HYDRAULIC, U/C DOOR, REAR, ... STARBOARD (Mod. 1796) (Pre Mod. 2491)	1	—		
27QM/1491734	DOWTY 1.01298.006	JACK, HYDRAULIC, U/C DOOR, REAR, ... STARBOARD (Mod. 2491)	1	—		
		NITROGEN AND VENTING, PORT AND STARBOARD (1 & 2P3043) (See Services:—Fuel, Nitrogen and Venting Installation)				
	13F11261	PANEL, BOTTOM SKIN, FORWARD ..... U/C BULKHEAD, PORT, GROUP (Mod. 1022)	1	—	MR	MC7/265
	14F11261	PANEL, BOTTOM SKIN, FORWARD U/C ..... BULKHEAD, STARBOARD, GROUP (Mod. 1022)	1	—	MR	MC7/266
		Spares for:—				
22689	15F11261	PANEL, SKIN, PORT, GROUP	1	—	MR/C	MC7/267
22690	16F11261	PANEL, SKIN, STARBOARD, GROUP	1	—	MR/C	MC7/268
		PANEL ARRANGEMENT, BETWEEN U/C ..... DOOR HINGE RIB AND MAIN U/C RIB, PORT AND STARBOARD (1 & 2F8839)	—	—		MC7/269
		Spares for:—				
	52F8839	PANEL, SKIN, PORT, GROUP ..... (Mod. 1022)	1	—		MC7/270
	53F8839	PANEL, SKIN, STARBOARD, GROUP ..... (Mod. 1022)	1	—		MC7/271
		Spares for:—				
13188	10F8839	Channel, stiffening	1	DTD610A	MR/C	MC7/272

Ref. No.	Part No.	Description (1 2 3 4)	No. off	Matl. Spec.	Cl. of St. M.R.	Plate and Illust'n No.
		PANEL, SKIN, PORT AND STARBOARD, GROUP (52 & 53F8839) (Mod. 1022) (Cont'd)				
	11F8839	Channel, stiffening, port	1	DTD610A	MR	MC7/273
	12F8839	Channel, stiffening, starboard	1	DTD610A	MR	MC7/274
	26F8839	Channel, stiffening	1	DTD610A	MR	MC7/275
	27F8839	Channel, stiffening, port	1	DTD610A	MR	MC7/276
	28F8839	Channel, stiffening, starboard	1	DTD610A	MR	MC7/277
	29F8839	Channel, stiffening, port	1	DTD610A	MR	MC7/278
	30F8839	Channel, stiffening, starboard	1	DTD610A	MR	MC7/279
	31F8839	Channel, stiffening, port	1	DTD610A	MR	MC7/280
	32F8839	Channel, stiffening, starboard	1	DTD610A	MR	MC7/281
	33F8839	Channel, stiffening, port	1	DTD610A	MR	MC7/282
	34F8839	Channel, stiffening	1	DTD610A	MR	MC7/283
13407	43F8839	PANEL, ACCESS, REAR, PORT, GROUP	1	–	B	MC7/284
17548	44F8839	PANEL, ACCESS, REAR, STB'D, GROUP	1	–	B	MC7/285
		Spares for:–				
28FP/4062373	F5/40	Fastener, dzus	8	–	C	
	25F8839	Panel, access, port	1	–		MC7/286
	49F8839	Panel, access, starboard	1	–		MC7/287
22682	505F11657	PANEL, ACCESS, FORWARD, PORT, GROUP	1	–	B	MC7/288
22688	506F11657	PANEL, ACCESS, FORWARD, STARBOARD, GROUP	1	–	B	MC7/289
		Spares for:–				
28FP/4062373	F5/40	Fastener, dzus	12	–	C	
	505aF11657	Panel, access, port	1	–		MC7/290
	506aF11657	Panel, access, starboard	1	–		MC7/291
28FP/340	S5/300	Spring, dzus	20	–	C	
		RADIO AND RADAR EQUIPMENT PORT AND STARBOARD (5 & 6T4292) (See:–Radio and Radar Installation)	–	–		
		RIB UNDERCARRIAGE, OUTBOARD, PORT AND STARBOARD (1 & 2F9967) (Pre Mod. 1106)				MC8/292
		RIB, UNDERCARRIAGE, OUTBOARD, PORT AND STARBOARD (161 & 162F9967) (Mod. 1106) S.O.O.				MC8/293
		Spares for:–				
	21F8487	Angle, tank, forward, top, port	1	–	MR	MC8/294
	22F8487	Angle, tank, forward, top, stb'd.	1	–	MR	MC8/295
	23F8487	Angle, tank, forward, bottom, port	1	–		MC8/296
	24F8487	Angle, tank, forward, bottom, starboard	1	–	MR	MC8/297
	34F8487	Angle, joint	1	L72		MC8/298
	25F8487	Angle, tank, centre, top, port	1	–	MR	MC8/299
	26F8487	Angle, tank, centre, top, stb'd.	1	–	MR	MC8/300

Ref. No.	Part No.	Description (1 2 3 4)	No. off	Matl. Spec.	Cl. of St. M.R.	Plate and Illust'n No.
		RIB, UNDERCARRIAGE, OUTBOARD, PORT AND STARBOARD (1 & 2F9967 or 161 & 162F9967) (Pre and Post Mod. 1106) (Cont'd.)				
	27F8487	Angle, tank, centre, bottom, port	1	—	MR	MC8/301
	28F8487	Angle, tank, centre, bottom, starboard	1	—	MR	MC8/302
	36F8487	Angle, joint	1	L72		MC8/303
	137F8487	Angle, tank, rear	1	—	MR/C	MC8/304
	138F8487	Angle, tank, rear	1	—	MR/C	MC8/305
	139F8487	Angle, joint	1	L72		MC8/306
	137F8487	Angle, port	1	L72	MR	MC8/307
	31F9967	Angle, starboard	1	—	MR	MC8/308
	25F9967	Angle, port	1	—	MR	MC8/309
	32F9967	Angle, starboard	1	—	MR	MC8/310
	211F8487	Angle, port	1	—		MC8/311
	212F8487	Angle, starboard	1	—		MC8/312
	213F8487	Angle, port	1	—		MC8/313
	214F8487	Angle, starboard	1	—		MC8/314
	215F8487	Angle, port	1	—		MC8/315
3795	216F8487	Angle, starboard	1	—	MR/C	MC8/316
	217F8487	Angle, port	1	—		MC8/317
	218F8487	Angle, starboard	1	—		MC8/318
	221F8487	Angle, port	1	—		MC8/319
	222F8487	Angle, starboard	1	—		MC8/320
	18F9967	Angle, port	1	—	MR	MC8/321
	19F9967	Angle, starboard	1	—	MR	MC8/322
	1F9987	BEAM, U/C BEARING, PORT, GROUP	1	—		MC8/323
	2F9987	BEAM, U/C BEARING, STARBOARD, GROUP	1	—	MR	MC8/324
		Spares for:—				
	1F9952	Beam, bearing, port	1	—		
	2F9952	Beam, bearing, starboard	1	—		
		Attachments—Bearing Beam Part Nos. 1 & 2F9952				
28D/1213447	A49/6J	Bolt, 3/8" BSF	16	—	C	
28D/20184	A59/7J	Bolt, 3/8" BSF	23	—	C	
28D/9435053	A59/8J	Bolt, 3/8" BSF	1	—	C	
	21F8702	Bolt, special	2	—		
	35F9987	Bolt, special	1			
28W/9419477	SP15/J	Washer, 3/8"	26	—	C	
28W/9419489	SP16/J	Washer, 3/8"	1	—	C	
	24F8702	Washer, special	19	—		
	97F7564	Bearing	1	—		
		Attachments—Bearing, Part No. 97F7564				
6589	15F9987	Bolt, special	2	—	C	
28M/4199609	A27/QC	Nut, castellated, 5/8" BSF	2	—	C	
28P/1221023	SP90/G12	Pin, split, 1/8" dia.	2	—	C	
28W/9419481	SP15/Q	Washer, 5/8"	2	—	C	

Ref. No.	Part No.	Description 1 2 3 4	No. off	Matl. Spec.	Cl. of St. M.R.	Plate and Illust'n No.
		BEAM, U/C. BEARING, PORT AND STARBOARD (1 & 2F9987) (Cont'd.)				
	32F9987	Bush	1	—	MR	
	3F9987	Cap, port	1	—	MR	
	4F9987	Cap, starboard	1	—	MR	
		Attachments—Cap, Part Nos. 3 & 4F9987				
1297	5K/2718	Stud	4	—	MR	
28W/9419489	SP16/J	Washer, 3/8"	4	—	C	
	20F9967	BLOCK, LIFTING, PORT, GROUP	1	—	MR	
	21F9967	BLOCK, LIFTING, STARBOARD, GROUP	1	—	MR	
	22F9967	BLOCK, LIFTING, PORT, GROUP	1	—	MR	
	23F9967	BLOCK, LIFTING, STARBOARD, GROUP	1	—	MR	
	24F9967	Bolt, special	12	—	MR	
	29F9967	Boom, top, port	1	—	MR	
	30F9967	Boom, top, starboard	1	—	MR	
	5F9967	Boom, bottom, port	1	—	MR	
	6F9967	Boom, bottom, starboard	1	—	MR	
	244F8487	Bracket, port	1	—		MC8/325
	261F8487	Bracket, starboard	1	—	MR	MC8/326
	245F8487	Bracket, channel, port	1	—		MC8/327
	257F8487	Bracket, channel, starboard	1	—	MR	MC8/328
	185F7564	Cap, lifting, block	2	—	MR	
	25F8703	LINK, DRAG, U/C. BEARING, BEAM, PORT, GROUP	1	—	MR	
	26F8703	LINK, DRAG, U/C. BEARING BEAM, STARBOARD, GROUP	1	—	MR	
	193F9967	Mounting, top-hat (Mod. 2200)	2	—		
	105F8487	Panel, access (Pre-Mod. 1106)	2	L72	MR	
		Attachments—Access Panel, Part No. 105F8487				
28D/9133011	A25/2C	Bolt, 2 BA	6	—	C	
28W/9419402	SP13/C	Washer, 2 BA	6	—	C	
	104F9967	Panel, web, forward, inboard, port (Pre-Mod. 1106)	1	—	MR	
	163F9967	Panel, web, forward, inboard, port (Mod. 1106)	1	—	MR	
	37F9967	Panel, web, forward, inboard, starboard (Pre-Mod. 1106)	1	—	MR	
	164F9967	Panel, web, forward, inboard, starboard (Mod. 1106)	1	—	MR	
	27F9967	Panel, web, centre, inboard, port	1	—	MR	
	28F9967	Panel, web, centre, inboard, starboard	1	—	MR	
	102F9967	Panel, web, rear, inboard, port	1	—	MR	
	103F9967	Panel, web, rear, inboard, starboard	1	—	MR	

Ref. No.	Part No.	Description 1 2 3 4	No. off	Matl. Spec.	Cl. of St. M.R.	Plate and Illust'n No.
		RIB, UNDERCARRIAGE, OUTBOARD, PORT & STARBOARD (1 & 2F9967 or 161 & 162F9967) (Pre and Post Mod. 1106) (Cont'd)				
	7F9967	Panel, web, forward, outboard, port ..... (Pre Mod. 1106)	1	–	MR	
	165F9967	Panel, web, forward, outboard, port ..... (Mod. 1106)	1	–	MR	
	8F9967	Panel, web, forward, outboard, starboard .. (Pre Mod. 1106)	1	–	MR	
	166F9967	Panel, web, forward, outboard, starboard .. (Mod. 1106)	1	–	MR	
	9F9967	Panel, web, centre, outboard, port	1	–	MR	
	10F9967	Panel, web, centre, outboard, starboard	1	–	MR	
	11F9967	Panel, web, rear, outboard, port	1	–	MR	
	12F9967	Panel, web, rear, outboard, starboard	1	–	MR	
21763	186F9967	Piece, distance	1	–	MR/C	MC8/329
	277F8487	Plate, inspection	2	–		
	171F9967	PLATE, INSPECTION, PORT, GROUP ... (Mod. 1300)	1	–	MR	
	172F9967	PLATE, INSPECTION, STARBOARD, ... GROUP (Mod. 1300)	1	–	MR	
		Attachments—Plates, Part Nos. 277F8487 & 271 & 272F9967				
28D/1013284	AS1248/2C	Bolt, mush. hd., 2 BA	QR	–	C	
28D/9142406	AS1248/3C	Bolt, mush. hd., 2 BA	QR	–	C	
28D/9133011	A25/2C	Bolt, 2 BA	QR	–	C	
28D/1200119	A25/4C	Bolt, 2 BA	QR	–	C	
	230F8487	Plate, reinforcing	2	–		MC8/330
	231F8487	Plate, reinforcing, port	1	–		MC8/331
	246F8487	Plate, reinforcing, starboard	1	–		MC8/332
	234F8487	Plate, reinforcing	2	–		MC8/333
	236F8487	Plate, reinforcing	1	–		MC8/334
	267F8487	Plate, joint, forward	1	–		MC8/335
	268F8487	Plate, joint, centre	1	–	MR	MC8/336
	269F8487	Plate, joint, rear	1	–	MR	MC8/337
26FP/13043	ISS3259	Plate, mod record	1	–	C	
		Attachments—Plate, Part No. ISS3259				
28S/9992522	A32/B16	Screw, rd. hd., 4 BA	4	–	C	
26FP/13044	ISS3260	Plate, serial	1	–	C	
	39F8487	Stiffener	1	–		MC9/338
	40F8487	Stiffener	1	–	MR	MC9/339
	41F8487	Stiffener	1	–		MC9/340
	42F8487	Stiffener	1	–		MC9/341
	43F8487	Stiffener	1	–	MR	MC9/342

MAINPLANES

INNER MAINPLANES

Ref. No.	Part No.	Description (1 2 3 4)	No. off	Matl. Spec.	Cl. of St. M.R.	Plate and Illust'n No.
		RIB, UNDERCARRIAGE, OUTBOARD, PORT & STARBOARD (1 & 2F9967 or 161 & 162F9967) (Pre and Post Mod. 1106) (Cont'd)				
	44F8487	**Stiffener**	1	—		MC9/343
	45F8487	**Stiffener**	1	—	MR	MC9/344
3805	46F8487	**Stiffener,** port	1	—	MR/C	MC9/345
	252F8487	**Stiffener,** starboard	1	—		MC9/346
	202F8387	**Stiffener,** port	1	—		MC9/347
	248F8487	**Stiffener,** starboard	1	—		MC9/348
21758	203F8487	**Stiffener,** port	1	—	MR/C	MC9/349
21760	249F8487	**Stiffener,** starboard	1	—	MR/C	MC9/350
21759	204F8487	**Stiffener,** port	1	—	MR/C	MC9/351
21761	250F8487	**Stiffener,** starboard	1	—	MR/C	MC9/352
	205F8487	**Stiffener,** port	1	—		MC9/353
	251F8487	**Stiffener,** starboard	1	—		MC9/354
	50F8487	**Stiffener**	1	—		MC9/355
	51F8487	**Stiffener**	1	—		MC9/356
	52F8487	**Stiffener**	1	—		MC9/357
	53F8487	**Stiffener**	1	—		MC9/358
	54F8487	**Stiffener**	1	—		MC9/359
	55F8487	**Stiffener**	1	—		MC9/360
	56F8487	**Stiffener**	1	—		MC9/361
21756	15F9967	**Stiffener**	1	—	MR/C	MC9/362
	58F8487	**Stiffener**	1	—		MC9/363
	59F8487	**Stiffener**	1	—		MC9/364
	60F8487	**Stiffener**	1	—		MC9/365
3822	61F8487	**Stiffener**	1	—	MR/C	MC9/366
3823	62F8487	**Stiffener**	1	—	MR/C	MC9/367
	63F8487	**Stiffener**	1	—		MC9/368
	64F8487	**Stiffener**	1	—		MC9/369
	65F8487	**Stiffener**	1	—		MC9/370
	66F8487	**Stiffener**	1	—		MC9/371
	67F8487	**Stiffener**	1	—		MC9/372
	68F8487	**Stiffener**	1	—		MC9/373
	69F8487	**Stiffener**	1	—		MC9/374
	70F8487	**Stiffener**	1	—		MC9/375
	71F8487	**Stiffener**	1	—		MC9/376
	72F8487	**Stiffener**	1	—		MC9/377
	73F8487	**Stiffener**	1	—		MC9/378
	74F8487	**Stiffener**	1	—		MC9/379
	75F8487	**Stiffener**	1	—		MC9/380
	76F8487	**Stiffener**	1	—		MC9/381
	77F8487	**Stiffener**	1	—		MC9/382
	78F8487	**Stiffener**	1	—		MC9/383
	79F8487	**Stiffener**	1	—		MC9/384
	80F8487	**Stiffener**	1	—		MC9/385
	81F8487	**Stiffener**	1	—		MC9/386
	242F8487	**Stiffener**	1	—	MR	MC9/387
	82F8487	**Stiffener**	1	—		MC9/388

Ref. No.	Part No.	Description 1 2 3 4	No. off	Matl. Spec.	Cl. of St. M.R.	Plate and Illust'n No.
		RIB, UNDERCARRIAGE, OUTBOARD, PORT & STARBOARD (1 & 2F9967) or 161 & 162F9967) (Pre and Post Mod. 1106) (Cont'd)				
	171F8487	**STIFFENER, PORT, GROUP** ...	1	—		MC9/389
	172F8487	**STIFFENER, STARBOARD, GROUP**	1	—		MC9/390
	17F8487	**Strap,** butt, for web, forward joint, inboard	1	—		MC9/391
	18F8487	**Strap,** butt, for web, rear joint, inboard	1	—		MC9/392
	13F9967	**Strap,** butt, for web, forward joint, outboard	1	—	MR	MC8/393
	167F9967	**Strap,** butt, for web, centre joint, outboard	1	—	MR	MC8/394
	19F8487	**Strap,** butt, for web, rear joint, outboard	1	—	MR	MC8/395
5571	273F8487	**Strap,** joint	1	—	MR/C	MC8/396
	274F8487	**Strap,** joint	1	—	MR	MC8/397
	275F8487	**Strap,** oint	1	—	MR	MC8/398
13651	1Z10516	**STRUT, STABILIZING, GROUP** ...	1	—		MC8/399
		Spares for:—				
	4Z10516	**Fork-end**	1	—		MC8/400
	9R3666	**Nut,** lock...	1	—	MR	MC8/401
	133F8487	**Washer,** saddle	AR	—		
		Attachment of Outboard U/C Rib to Front and Rear Spar, Top and Bottom, port and starboard (F9701)				
		Consisting of:—				
	A59/8L	**Bolt,** $\frac{7}{16}$" BSF	8	—		MC7/402
28D/1213679	A59/9N	**Bolt,** $\frac{1}{2}$" BSF	2	—	C	MC7/403
28D/20184	A59/7J	**Bolt,** $\frac{3}{8}$" BSF	4	—	C	MC7/404
28D/1213447	A59/6J	**Bolt,** $\frac{3}{8}$" BSF	4	—	C	MC7/405
28D/1213446	A59/5J	**Bolt,** $\frac{3}{8}$" BSF	4	—	C	MC7/406
28M/4095406	A24/LC	**Nut,** castellated, $\frac{7}{16}$" BSF	8	—	C	
28M/4199653	A24/NC	**Nut,** castellated, $\frac{1}{2}$" BSF	2	—	C	
28M/4095940	A24/JC	**Nut,** castellated, $\frac{3}{8}$" BSF	12	—	C	
28P/9527619	SP90/C7	**Pin,** split, $\frac{1}{16}$" dia	12	—	C	
28P/1202572	SP90/E9	**Pin,** split, $\frac{3}{32}$" dia	10	—	C	
	21F7698	**Washer,** special	8	—		MC7/407
	15K2702	**Washer,** special	2	—	MR	MC7/408
	17F7584	**Washer,** special	4	—		MC7/409
28W/9419467	SP13/L	**Washer,** $\frac{7}{16}$"	8	—	C	
28W/9419468	SP13/N	**Washer,** $\frac{1}{2}$"	2	—	C	
28W/9419466	SP13/J	**Washer,** $\frac{3}{8}$"	12	—	C	
28W/9419489	SP16/J	**Washer,** $\frac{3}{8}$"	8	—	C	

Ref. No.	Part No.	Description (1 2 3 4)	No. off	Matl. Spec.	Cl. of St. M.R.	Plate and Illust'n No.
		MAINPLANE, INNER PORTION, PORT AND STARBOARD, GROUP (21, 22, 157 & 158F9701) (Mod. 1106 & 2129) (Cont'd)				
	62F10168	RIB, HINGE, 212.5, MAIN UNDER-CARRIAGE DOOR, PORT, GROUP	1	–	MR	MC10/410
	63F10168	RIB, HINGE, 212.5, MAIN UNDER-CARRIAGE DOOR, STARBOARD, GROUP	1	–	MR	MC10/411
		Spares for:–				
	252F8640	Angle, seal attachment, port	1	L72	MR	MC10/412
	253F8640	Angle, seal attachment, starboard	1	L72	MR	MC10/413
	255F8640	Angle, seal attachment, port	1	L72	MR	MC10/414
	254F8640	Angle, seal attachment, starboard	1	L72	MR	MC10/415
	257F8640	Angle, seal attachment, port	1	L72	MR	MC10/416
17594	256F8640	Angle, seal attachment, starboard	1	L72	MR/C	MC10/417
	259F8640	Angle, seal attachment, port	1	L72	MR	MC10/418
	258F8640	Angle, seal attachment, starboard	1	L72	MR	MC10/419
	261F8640	Angle, seal attachment, port	1	L72	MR	MC10/420
10185	260F8640	Angle, seal attachment, starboard	1	L72	MR/C	MC10/421
	131F8640	Block, packing, LH datum hinge	1	BSS668	MR	MC10/422
	132F8640	Block, packing, RH datum hinge	1	BSS668	MR	MC10/423
	5F8640	Boom, bottom, port	1	L72		MC10/424
	6F8640	Boom, bottom, starboard	1	L72	MR	MC10/425
	15F10168	BOOM, TOP, PORT, GROUP	1	–	MR	MC10/426
	16F10168	BOOM, TOP, STARBOARD, GROUP	1	–	MR	MC10/427
	7F8640	Boom, forward, port	1	L72	MR	MC10/428
	8F8640	Boom, forward, starboard	1	L72	MR	MC10/429
	9F8640	Boom, rear, port	1	L72	MR	MC10/430
	10F8640	Boom, rear, starboard	1	L72		MC10/431
	170F8640	BRACKET, FOR FUEL COCKS, PORT, GROUP	1	–	MR	MC10/432
	173F8640	BRACKET, FOR FUEL COCKS, STARBOARD, GROUP	1	–	MR	MC10/433
	235F8640	BRACKET UNDERCARRIAGE DOOR, FORWARD HINGE, PORT, GROUP	1	–		MC10/434
3741	236F8640	BRACKET, UNDERCARRIAGE DOOR, FORWARD HINGE, STB'D., GROUP	1	–	MR/C	MC10/435
		Spares for:–				
	113F8640	Bracket, channel, port	1	–	MR	MC10/436
13560	114F8640	Bracket, channel, starboard	1	–	MR/C	MC10/437
	116F8640	BRACKET, HINGE, GROUP	1	–		
		Attachments–Bracket, Part Nos. 235 & 236F8640				
28D/9133011	A25/2C	Bolt, 2 BA	2	–	C	
28D/9133012	A25/3C	Bolt, 2 BA	8	–	C	
28D/1012995	A25/22C	Bolt, 2 BA	2	–	C	
28M/1012015	AGS2001/C1/66	Nut, stiff, 2 BA	12	–	C	
	114F8073	Tube, distance	4	T35		
28W/9419404	SP16/C	Washer, 2 BA	2	–	C	
	122F8640	Washer, special	10	L72		

Ref. No.	Part No.	Description (1 2 3 4)	No. off	Matl. Spec.	Cl. of St. / M.R.	Plate and Illust'n No.
		RIB, HINGE, 212.5, MAIN UNDER-CARRIAGE DOOR, PORT AND STARBOARD, GROUP (62 & 63F10168) (Cont'd)				
	241F8640	BRACKET, UNDERCARRIAGE DOOR, .. DATUM HINGE, PORT, GROUP	1	–		MC10/438
	242F8640	BRACKET, UNDERCARRIAGE DOOR, .. DATUM HINGE, STARBOARD, GROUP	1	–	MR	MC10/439
		Spares for:–				
	221F8640	HINGE, DATUM, GROUP	1	–	MR	MC10/440
		Spares for:–				
13561	223F8640	Bracket, channel	1	–	MR/C	MC10/441
		Attachments–Bracket, Part Nos. 241 and 242F8640				
	4SS4353	Bolt, csk. hd.	2	–	MR	
28D/9133011	A25/2C	Bolt, 2 BA	8	–	C	
28D/9133012	A25/3C	Bolt, 2 BA	4	–	C	
28D/1011022	A25/18C	Bolt, 2 BA	4	–	C	
28D/1012995	A25/22C	Bolt, 2 BA	2	–	C	
28D/1212594	A25/33E	Bolt, 1/4" BSF	2	–	C	
28M/1072015	AGS2001/C1/66	Nut, stiff, 2 BA	20	–	C	
28M/9480017	AGS2001/E1/66	Nut, stiff, 1/4" BSF	2	–	C	
	86F8073	Tube, distance, 3/8" o/d x 17G x .92" .. long	4	T35		
	114F8073	Tube, distance, 5/16" o/d x 17G x .92" . long	4	T35		
	135F8640	Tube, distance, 5/16" o/d x 17G x 1.4" . long	4	T35		
28W/9419404	SP16/C	Washer, 2 BA	20	–	C	
28W/9418921	SP13/E	Washer, 1/4"	2	–	C	
	133F8640	Washer, special	8	–		
	136F8640	Washer, special	2	–		
	237F8640	BRACKET, UNDERCARRIAGE DOOR, .. REAR CENTRE HINGE, PORT, GROUP	1	–		MC10/442
	238F8640	BRACKET, UNDERCARRIAGE DOOR, .. REAR CENTRE HINGE, STARBOARD, GROUP	1	–		MC10/443
		Spares for:–				
13562	145F8640	Bracket, channel	1	–	MR/C	MC10/444
	146F8640	BRACKET, HINGE, GROUP	1	–	MR	MC10/445
		Attachments–Bracket, Part Nos. 237 and 238F8640				
28D/9133011	A25/2C	Bolt, 2 BA	8	–	C	
28D/1012995	A25/22C	Bolt, 2 BA	2	–	C	
	4SS4353	Bolt, csk. hd.	2	–	MR	
28M/1012015	AGS2001/C1/66	Nut, stiff, 2 BA	12	–	C	
	114F8640	Tube, distance	4	–	C	
28W/9419404	SP16/C	Washer, 2 BA	2	–	C	
	133F8640	Washer, special	10	–		

Ref. No.	Part No.	Description 1 2 3 4	No. off	Matl. Spec.	Cl. of St. M.R.	Plate and Illust'n No.
		RIB, HINGE, 212.5, MAIN UNDER-CARRIAGE DOOR, PORT AND STARBOARD, GROUP (62 & 63F10168) (Cont'd)				
	239F8640	BRACKET, UNDERCARRIAGE DOOR, REAR HINGE, PORT, GROUP	1	–		MC10/446
	240F8640	BRACKET, UNDERCARRIAGE DOOR, REAR HING, STB'D., GROUP	1	–	MR	MC10/447
		Spares for:–				
	157F8640	Bracket, channel, port	1	–	MR	MC10/448
13563	158F8640	Bracket, channel, starboard	1	–	MR/C	MC10/449
	154F8640	BRACKET, HINGE, GROUP	1	–	MR	MC10/450
		Attachments–Bracket, Part Nos. 239 and 240F8640				
28D/9133011	A25/2C	Bolt, 2 BA	2	–	C	
28D/9133012	A25/3C	Bolt, 2 BA	8	–	C	
28D/1012995	A25/22C	Bolt, 2 BA	1	–	C	
28M/1012015	AGS2001/C1/66	Nut, stiff, 2 BA	11	–	C	
	114F8073	Tube, distance	2	T35		
28W/9419404	SP16/C	Washer, 2 BA	2	–	C	
	133F8640	Washer, special	9	–		
10124	191F8640	Eyebolt	1	–	MR/C	MC10/451
		Attachments–Eyebolt, Part No. 191F8640				
28M/4095808	AGS2001/J/1	Nut, stiff, 3/8" BSF	1	–	C	
	192F8640	Tube, distance	2	–	MR	
	193F8640	Washer, special	1	–	MR	
	248F8640	PANEL, ACCESS, BOTTOM HALF, PORT, GROUP	1	–	MR	MC10/452
	249F8640	PANEL, ACCESS, BOTTOM HALF, STARBOARD, GROUP	1	–	MR	MC10/453
	250F8640	PANEL, ACCESS, TOP HALF, PORT, GROUP	1	–	MR	MC10/454
	251F8640	PANEL, ACCESS, TOP HALF, STARBOARD, GROUP	1	–	MR	MC10/455
	43F10168	PANEL, ACCESS, CENTRE, PORT, GROUP	1	–	MR	MC10/456
	44F10168	PANEL, ACCESS, CENTRE, STARBOARD, GROUP	1	–	MR	MC10/457
1432818	45F10168	PANEL, ACCESS, CENTRE, PORT, GROUP	1	–	MR/C	MC10/458
1432698	46F10168	PANEL, ACCESS, CENTRE, STARBOARD, GROUP	1	–	MR/C	MC10/459
1432819	47F10168	PANEL, ACCESS, PORT, GROUP	1	–	MR/C	MC10/460
1432820	48F10168	PANEL, ACCESS, STARBOARD, GROUP	1	–	MR/C	MC10/461
	271F8640	Panel, access	1	–	MR	MC10/462

Ref. No.	Part No.	Description (1 2 3 4)	No. off	Matl. Spec.	Cl. of St. / M.R.	Plate and Illust'n No.
		RIB, HINGE, 212·5, MAIN U/C, DOOR, PORT AND STARBOARD, GROUP (62 & 63F10168) (Cont'd)				
		Attachments—Access Panels, Part Nos. 248, 249, 250, 251 & 271F8640, 43, 44, 45, 46, 47 & 48F10168				
	ISS5306	**Bolt,** special	72	—	MR	
28D/1007982	AS1248/1C	**Bolt,** mush. hd. 2 BA	8	—	C	
	121F8640	**Pin,** hinge, forward	1	S96	MR	MC10/463
	143F8640	**Pin,** hinge, datum	1	S96	MR	MC10/464
	165F8640	**Pin,** hinge, rear centre and rear ...	2	S96	MR	MC10/465
26FP/13043	ISS3259	**Plate,** mod record	1	—	C	
		Attachments—Plate, Part No. ISS3259				
28S/9992525	A32/B12	**Screw,** rd. hd. 4 BA	4	—	C	
26FP/13044	ISS3260	**Plate,** serial	1	—	C	
	57F8640	**Plate,** gusset, bottom, rear	2	L72		MC10/466
	59F8640	**Plate,** gusset, bottom, front, port ...	1	L72		MC10/467
	60F8640	**Plate,** gusset, bottom, front, starboard	1	L72		MC10/468
	77F8640	**Seal** (Make from ISS4143 × 9¾" long, Ref. No. 26DC/3746)	1	—		MC10/469
	78F8640	**Seal** (Make from ISS4143 × 16·9" long, Ref. No. 26DC/3746)	1	—		MC10/470
	79F8640	**Seal** (Make from ISS4143 × 16·75" long, Ref. No. 26DC/3746)	1	—		MC10/471
	80F8640	**Seal** (Make from ISS4143 × 9" long, Ref. No. 26DC/3746)	1	—		MC10/472
		Attachments—Seal, Part No. 77, 78 79 & 80F8640				
28D/1218385	AS1248/2B	**Bolt,** mush. hd. 2 BA	25	—	C	
12103	213F8640	**Strap,** joint, port	1	—	MR/C	MC10/473
	214F8640	**Strip,** joint, starboard	1	—	MR	MC10/474
	22F10168	**Strap,** joint, port	1	—	MR	MC10/475
	23F10168	**Strip,** joint, starboard	1	—	MR	MC10/476
	141F8640	**Washer,** packing	1	—	MR	
	142F8640	**Washer,** packing	1	—	MR	
		ATTACHMENT OF UNDER-CARRIAGE DOOR HINGE RIB 212·5, TO FRONT SPAR AND MAIN UNDER-CARRIAGE RIB (F8639)				
		Spares for :—				
	7F8470	**Angle,** rib attachment, bottom, port ...	1	L72		MC10/477
	8F8470	**Angle,** rib attachment, bottom, starboard	1	L72		MC10/478
	7F8639	**Angle,** top attachment, port	1	L40	MR	MC10/479

Ref. No.	Part No.	Description (1 2 3 4)	No. off	Matl. Spec.	Cl. of St. / M.R.	Plate and Illust'n No.
		ATTACHMENT OF U/C DOOR HINGE RIB 212.5, TO FRONT SPAR AND MAIN U/C RIB (F8639) (Cont'd)				
	8F8639	Angle, top attachment, starboard	1	L40		MC10/480
	9F8639	Angle, top attachment, port	1	DTD364B	MR	MC10/481
	10F8639	Angle, top attachment, starboard	1	DTD364B	MR	MC10/482
		Attachments—Angles, Part Nos. 7, 8, 9 & 10F8639				
28D/9133012	A25/3C	Bolt, 2 BA	2	—	C	
28D/9133011	A25/2C	Bolt, 2 BA	4	—	C	
28D/1213759	A30/4G	Bolt, 5/16" BSF	1	—	C	
28M/1012015	AGS2001C1/66	Nut, stiff, 2 BA	6	—	C	
	14F8639	Plate, locking	1	—	MR	
28W/9419402	SP13/C	Washer, 2 BA	6	—	C	
	17F8639	Angle, attachment, rear top, port	1	L72		MC10/483
	18F8639	Angle, attachment, rear top, stbd.	1	L72	MR	MC10/484
	19F8639	Angle, attachment, rear bottom, port	1	L72		MC10/485
	20F8639	Angle, attachment, rear bottom, starboard	1	L72		MC10/486
	3F8639	Bracket, rib attachment, inboard, front, port	1	DTD130	MR	MC10/487
	4F8639	Bracket, rib attachment, inboard, front starboard	1	DTD130	MR	MC10/488
	5F8639	Bracket, rib attachment, outboard, front, port	1	DTD130	MR	MC10/489
	6F8639	Bracket, rib attachment, outboard, front, starboard	1	DTD130	MR	MC10/490
		Attachments—Brackets, Part Nos. 3, 4, 5 & 6F8639				
28D/1011238	A25/3E	Bolt, 1/4" BSF	4	—	C	
28D/1213414	A30/24G	Bolt, 5/16" BSF	1	—	C	
28D/1213410	A30/20G	Bolt, 5/16" BSF	1	—	C	
28M/9480017	AGS2001/E/1	Nut, stiff, 1/4" BSF	4	—	C	
28M/5808571	A27/GS	Nut, slotted, 5/16" BSF	2	—	C	
28P/9527619	SP90/C7	Pin, split, 1/16" dia.	2	—	C	
28W/9418921	SP13/E	Washer, 1/4"	2	—	C	
28W/9419487	SP16/E	Washer, 1/4"	2	—	C	
28W/9419403	SP13/G	Washer, 5/16"	2	—	C	
	12F8639	Washer, special	1	—	MR	
		RIB, COMBINED ELEVATOR AND AILERON HINGE, 616.186 (TRANSPORT RIB) PORT AND STARBOARD (1 & 2F9821)				MC10/491
		Spares for:—				
	31F9821	Angle, tank, lower, forward No. 5 tank, port	1	L72	MR	
	32F9821	Angle, tank, lower, forward No. 5 tank, starboard	1	L72	MR	

Ref. No.	Part No.	Description (1 2 3 4)	No. off	Matl. Spec.	Cl. of St. M.R.	Plate and Illust'n No.
		RIB, COMBINED ELEVATOR AND AILERON HINGE 618-186 (TRANSPORT RIB) PORT AND STARBOARD, (1 & 2F9821) (Cont'd)				
	33F9821	**Angle,** tank, upper, No. 5 tank, port ...	1	L72	MR	
	34F9821	**Angle,** tank, upper, No. 5 tank, starboard	1	L72	MR	
	35F9821	**Angle,** tank, lower, aft No. 5 tank, port	1	L72	MR	
	36F9821	**Angle,** tank, lower, aft No. 5 tank, starboard	1	L72	MR	
	37F9821	**Angle,** tank, upper No. 7 tank, port ...	1	L72	MR	
	38F9821	**Angle,** tank, upper No. 7 tank, starboard	1	L72	MR	
	39F9821	**Angle,** tank, lower, forward No. 7 tank, port	1	L72	MR	
	40F9821	**Angle,** tank, lower, forward No. 7 tank, starboard	1	L72	MR	
	41F9821	**Angle,** tank, lower, aft No. 7 tank, port	1	L72	MR	MC11/492
	42F9821	**Angle,** tank, lower, aft No. 7 tank, starboard	1	L72	MR	MC11/493
	51F9821	**Angle,** attachment, forward, bottom boom, outboard, port	1	L72	MR	
	52F9821	**Angle,** attachment, forward, bottom boom, outboard, starboard	1	L72	MR	
	61F9821	**Angle,** attachment, centre No. 5 tank bottom boom, inboard and outboard	8	L72	MR	
	62F9821	**Angle,** attachment, centre, bottom boom, outboard, port	1	L72	MR	
	63F9821	**Angle,** attachment, centre, bottom boom, outboard, starboard	1	L72	MR	
	74F9821	**Angle,** attachment, centre, bottom boom, outboard, port	1	L72	MR	
	75F9821	**Angle,** attachment, centre, bottom boom, outboard, starboard	1	L72	MR	
	102F9821	**Angle,** attachment, centre, bottom boom, outboard, port	1	L72	MR	
	103F9821	**Angle,** attachment, centre, bottom boom, outboard, starboard	1	L72	MR	
	57F9821	**Angle,** attachment, aft, bottom boom, outboard, port	1	L72	MR	
	58F9821	**Angle,** attachment, aft, bottom boom, outboard, starboard	1	L72	MR	
	101F9821	**Block,** lifting	2	S96	MR	

MAINPLANES

INNER MAINPLANES

Ref. No.	Part No.	Description (1 2 3 4)	No. off	Matl. Spec.	Cl. of St. M.R.	Plate and Illust'n No.
		RIB, COMBINED ELEVATOR AND AILERON HINGE 618-186 (TRANSPORT RIB) PORT AND STARBOARD (1 & 2F9821) (Cont'd)				
		Attachments—Lifting Block, Part No. 101F9821				
28D/9434873	A59/17E	**Bolt,** ¼" BSF	5	—	C	
28D/1213596	A59/18E	**Bolt,** ¼" BSF	3	—	C	
28M/9480017	AGS2001/E1/66	**Nut,** stiff, ¼" BSF	8	—	C	
28W/9419487	SP16/E	**Washer,** ¼"	5	—	C	
28W/9418921	SP13/E	**Washer,** ¼"	3	—	C	
	ISS4665	**Washer,** special	8	—	C	
	7F9821	**Boom,** top, port	1	DTD364B	MR	
	8F9821	**Boom,** top, starboard	1	DTD364B	MR	
	9F9821	**Boom,** bottom, port	1	DTD364B	MR	
	10F9821	**Boom,** bottom, starboard	1	DTD364B	MR	
	109F9821	**PANEL, ACCESS, PORT, GROUP**	1	—	MR	
	110F9821	**PANEL, ACCESS, STARBOARD, GROUP**	1	—	MR	
	105F9821	**Plate,** joint	1	L72	MR	
26FP/13043	ISS3259	**Plate,** mod record	1	—	C	
		Attachments—Plate, Part No. ISS3259				
28D/1007979	AS1246/1B	**Bolt,** rd. hd. 4 BA	4	—	C	
28W/9419465	SP13/B	**Washer,** 4 BA	4	—	C	
26FP/13044	ISS3260	**Plate,** serial	1	—	C	
	15F9821	**Stiffener,** vertical	1	L72	MR	
	16F9821	**Stiffener,** vertical	1	L72	MR	
	17F9821	**Stiffener,** vertical	1	L72	MR	
	18F9821	**Stiffener,** vertical	1	L72	MR	
	19F9821	**Stiffener,** vertical	1	L72	MR	
	20F9821	**Stiffener,** vertical	1	L72	MR	
	21F9821	**Stiffener,** vertical	1	L72	MR	
	22F9821	**Stiffener,** vertical	1	L72	MR	
	23F9821	**Stiffener,** vertical	1	L72	MR	
	24F9821	**Stiffener,** vertical	1	L72	MR	
	25F9821	**Stiffener,** vertical	1	L72	MR	
	26F9821	**Stiffener,** vertical	1	L72	MR	
	27F9821	**Stiffener,** vertical	1	L72	MR	
	28F9821	**Stiffener,** vertical	1	L72	MR	
	29F9821	**Stiffener,** vertical	1	L72	MR	
	56F7584	**Strip,** joint, forward, No. 5 tank angles	1	L72	MR	
	57F7584	**Strip,** joint, forward, No. 5 tank angles	1	L72	MR	
	104F9821	**Strip,** joint, aft, No. 5 tank angles ...	1	L72	MR	
	58F7584	**Strip,** joint, forward, No. 7 tank angles	1	L72	MR	
	59F7584	**Strip,** joint, forward, No. 7 tank angles	1	L72	MR	

Ref. No.	Part No.	Description (1 2 3 4)	No. off	Matl. Spec.	Cl. of St. / M.R.	Plate and Illust'n No.
		RIB, COMBINED ELEVATOR AND AILERON HINGE 618-186 (TRANSPORT RIB) PORT AND STARBOARD (1 & 2F9821) (Cont'd)				
	7F8686	**Strip,** joint, aft No. 7 tank angles ...	1	L72	MR	
	8F8686	**Strip,** joint, aft, No. 7, tank angles ...	1	L72	MR	
	3F9821	**WEB, INBOARD, PORT, GROUP** ...	1	—	MR	
	4F9821	**WEB, INBOARD, STARBOARD, GROUP**	1	—	MR	
	5F9821	**WEB, OUTBOARD, PORT, GROUP**	1	—	MR	
	6F9821	**WEB, OUTBOARD, STARBOARD, GROUP**	1	—	MR	
		Attachments of Elevator and Aileron Hinge Rib to front and rear spar, top and bottom, Port and Starboard (1 and 2F9821) Consisting of :—				
28D/1213606	A59/5G	**Bolt,** $\frac{5}{16}$" BSF	11	—	C	
28D/1213607	A59/6G	**Bolt,** $\frac{5}{16}$" BSF	1	—	C	
	100F9821	**Bolt,** special	1	—		
	69F9821	**Bolt,** special	4	—		
	70F9821	**Bolt,** special	4	—		
	71F9821	**Bolt,** special	4	—		
	72F9821	**Bolt,** special	3	—		
28M/5808571	A27/GS	**Nut,** slotted, $\frac{5}{16}$" BSF	12	—	C	
28M/4199635	A27/LC	**Nut,** castellated, $\frac{7}{16}$" BSF	5	—	C	
28M/9129449	A27/LS	**Nut,** slotted, $\frac{7}{16}$" BSF	11	—	C	
28P/9527619	SP90/C7	**Pin,** split, $\frac{1}{16}$" dia.	12	—	C	
28P/1202572	SP90/E9	**Pin,** split, $\frac{3}{32}$" dia.	16	—	C	
28W/9419403	SP13/G	**Washer,** $\frac{5}{16}$"	12	—	C	
28W/9419476	SP15/G	**Washer,** $\frac{5}{16}$"	12	—	C	
28W/9419467	SP13/L	**Washer,** $\frac{7}{16}$"	8	—	C	
28W/9419490	SP16/L	**Washer,** $\frac{7}{16}$"	8	—	C	
	68F9821	**Washer,** special	16	—		
		RIB, HINGE, CENTRE ELEVATOR, 478-186, PORT AND STARBOARD (1 & 2F9977)	–	—		MC11/494
		Spares for :—				
22676	15F7574	**Angle,** tank, outboard, top port, bottom starboard, No. 5 tank	1	L72	MR/C	MC11/495
	17F7574	**Angle,** tank, outboard, bottom port, top starboard, No. 5 tank	1	L72	MR	
	5F8676	**Angle,** tank, outboard, bottom port, top starboard, No. 7 tank	1	L72	MR	
	6F8676	**Angle,** tank, outboard, top port, bottom starboard, No. 7 tank	1	L72	MR	
	23F7574	**Angle,** tank, inboard, port, top, No. 3 tank	1	L72	MR	
	25F7574	**Angle,** tank, inboard, top starboard, No. 3 tank	1	L72	MR	
	107F7574	**Angle,** tank, lower, inboard, forward No. 3 tank, port	1	—		

Ref. No.	Part No.	Description (1 2 3 4)	No. off	Matl. Spec.	Cl. of St. M.R.	Plate and Illust'n No.
		RIB, HINGE, CENTRE ELEVATOR, 478-186, PORT AND STARBOARD (1 & 2F9977) (Cont'd)				
	108F7574	**Angle,** tank, lower, inboard, forward No. 3 tank, starboard	1	L72	MR	
	109F7574	**Angle,** tank, lower, inboard, aft No. 3 tank, port	1	L72	MR	
	110F7574	**Angle,** tank, lower, inboard, aft No. 3 tank, starboard	1	L72	MR	
	27F7574	**Angle,** tank, upper, inboard No. 4 tank, port	1	L72	MR	
	29F7574	**Angle,** tank, upper, inboard, No. 4 tank, starboard	1	L72	MR	
	111F7574	**Angle,** tank, lower, inboard, forward No. 4 tank, port	1	L72	MR	
	112F7574	**Angle,** tank, lower, inboard, forward No. 4 tank, starboard	1	L72	MR	MC11/496
	113F7574	**Angle,** tank, lower, inboard, aft No. 4 tank, port	1	L72	MR	
	114F7574	**Angle,** tank, lower, inboard, aft No. 4 tank, starboard	1	L72	MR	
	13F8676	**Angle,** tank, upper, inboard, No. 6 tank, port	1	L72	MR	
	14F8676	**Angle,** tank, upper, inboard, No. 6 tank, starboard	1	L72	MR	
	115F7574	**Angle,** tank, lower, inboard, forward No. 6 tank, port	1	L72	MR	
	116F7574	**Angle,** tank, lower, inboard, forward No. 6 tank, starboard	1	L72	MR	
	15F8676	**Angle,** tank, lower inboard, aft No. 6 tank, port	1	L72	MR	
	16F8676	**Angle,** tank, lower, inboard, aft No. 6 tank, starboard	1	L72	MR	
	21F9977	**BOOM, TOP, PORT, GROUP** ...	1	—	MR	
	23F9977	**BOOM, TOP, STARBOARD, GROUP**	1	—	MR	
		Spares for :—				
	3F9977	**Boom,** port	1	DTD364B	MR	
	5F9977	**Boom,** starboard	1	DTD364B	MR	
	16F9977	**Boom,** reinforcing, inboard port, outboard starboard	1	DTD364B	MR	
	17F9977	**Boom,** reinforcing, outboard port, inboard starboard	1	DTD364B	MR	
	22F9977	**BOOM, BOTTOM, PORT, GROUP**	1	—	MR	
	24F9977	**BOOM, BOTTOM, STARBOARD, GROUP**	1	—	MR	
		Spares for :—				
	4F9977	**Boom,** port	1	DTD364B	MR	
	6F9977	**Boom,** starboard	1	DTD364B	MR	
	18F9977	**Boom,** reinforcing, inboard port, outboard, starboard	1	DTD364B	MR	
	19F9977	**Boom,** reinforcing, outboard port, inboard starboard	1	DTD364B	MR	

Ref. No.	Part No.	Description (1 2 3 4)	No. off	Matl. Spec.	Cl. of St. M.R.	Plate and Illust'n No.
		RIB, HINGE, CENTRE ELEVATOR, 478.186, PORT AND STARBOARD (1 & 2F9977) (Cont'd)				
26FP/13043	1SS3259	Plate, mod record	1	–	C	
		Attachments—Plate, Part No. 1SS3259				
28D/9137408	AS1246/ 1/2B	Bolt, rd. hd. 4 BA	4	–	C	
28W/9419465	SP13/B	Washer, 4 BA	4	–	C	
26FP/13044	ISS3260	Plate, serial	1	–	C	
	8F7574	Plate, cover	2	L72	MR	
		Attachments—Cover Plate, Part No. 8F7574				
28D/9436920	A25/1C	Bolt, 2 BA	6	–	C	
28W/9419402	SP13/C	Washer, 2 BA	6	–	C	
	53F7574	Stiffener, vertical	1	L72	MR	
	54F7574	Stiffener, vertical	1	L72	MR	
	55F7574	Stiffener, vertical	1	L72	MR	
	56F7574	Stiffener, vertical	1	L72	MR	
	57F7574	Stiffener, vertical	1	L72	MR	
	58F7574	Stiffener, vertical	1	L72	MR	
	59F7574	Stiffener, vertical	1	L72	MR	
	60F7574	Stiffener, vertical	1	L72	MR	
	61F7574	Stiffener, vertical	1	L72	MR	
	62F7574	Stiffener, vertical	1	L72	MR	
	63F7574	Stiffener, vertical	1	L72	MR	
	64F7574	Stiffener, vertical	1	L72	MR	
	65F7574	Stiffener, vertical	1	L72	MR	
	66F7574	Stiffener, vertical	1	L72	MR	
	67F7574	Stiffener, vertical	1	L72	MR	
	68F7574	Stiffener, vertical	1	L72	MR	
	69F7574	Stiffener, vertical	1	L72	MR	
	70F7574	Stiffener, vertical	1	L72	MR	
	71F7574	Stiffener, vertical	1	L72	MR	
	72F7574	Stiffener, vertical	1	L72	MR	
	73F7574	Stiffener, vertical	1	L72	MR	
	74F7574	Stiffener, vertical	1	L72	MR	
	75F7574	Stiffener, vertical	1	L72	MR	
	76F7574	Stiffener, vertical	1	L72	MR	
	77F7574	Stiffener, vertical	1	L72	MR	
	78F7574	Stiffener, vertical	1	L72	MR	
	79F7574	Stiffener, vertical	1	L72	MR	
	45F7574	Strap, joint, inboard web	1	L72	MR	
	46F7574	Strap, joint outboard web	1	L72	MR	
	162F8672 or 98F7574	Strip, angle joint, outboard, forward No. 5 tank	1	L72	MR	
	97F7574 or 98F7574	Strip, angle joint, outboard, aft No. 5 tank	1	L72	MR	

Ref. No.	Part No.	Description (1 2 3 4)	No. off	Matl. Spec.	Cl. of St. M.R.	Plate and Illust'n No.
		RIB, HINGE, CENTRE ELEVATOR, 478.186, PORT AND STARBOARD (1 & 2F9977) (Cont'd)				
	104F7574 or 163F8676	Strip, angle joint, outboard, forward ..... No. 7 tank	1	L72	MR	MC11/497
	11F8676	Strip, angle joint, outboard, aft ..... No. 7 tank	1	L72	MR	
	12F8676	Strip, angle joint, outboard, aft ..... No. 7 tank	1	L72	MR	
	99F7574 or 100F7574	Strip, angle joint, inboard, forward No. 3 ..... tank	1	L72	MR	
	59F9977	Strip, angle, joint, inboard, aft No. 3 tank	1	L72	MR	
22678	101F7574 or 102F7574	Strip, angle joint, inboard No. 4 tank	2	L72	C	MC11/498
	105F7574 or 106F7574	Strip, angle joint, inboard, forward No. ..... 6 tank	1	L72	MR	
	17F8676	Strip, angle joint, inboard, aft No. 6 tank	1	L72	MR	
	18F8676	Strip, angle joint, inboard, aft No. 6 tank	1	L72	MR	
	11F9977	WEB, FORWARD, OUTBOARD, PORT, ... GROUP	1	—	MR	
	12F9977	WEB, FORWARD, OUTBOARD, ... STARBOARD, GROUP	1	—	MR	
	13F9977	Web, forward, inboard	1	DTD687	MR	
	25F9977	Web, rear, inboard	1	DTD687	MR	
	15F9977	Web, rear, outboard	1	DTD687	MR	
		Attachment of centre Elevator hinge rib to front and rear spar, top and bottom, port and starboard (1 & 2F9977) Consisting of:—				
28D/1215682	A59/3E	Bolt, 1/4" BSF	12	—	C	MC11/499
	8F9071	Bolt, special	2	—	MR	MC11/500
	9F9701	Bolt, special	2	—	MR	MC11/501
	10F9701	Bolt, special	4	—	MR	MC11/502
	11F9701	Bolt, special	6	—	MR	MC11/503
	23F9701	Bolt, special	2	—	MR	MC11/504
	24F9701	Bolt, special	2	—	MR	MC11/505
28M/1011475	A27/EP	Nut, 1/4" BSF	12	—	C	
	14F9701	Nut, special	9	—	MR	MC11/506
	15F9701	Nut, special	9	—	MR	MC11/507
28W/7000392	SP14/E	Washer, 1/4"	12	—	C	
28W/9419405	SP15/E	Washer, 1/4"	12	—	C	
28W/9419492	SP16/P	Washer, 9/16"	18	—	C	
	46F7564	Washer, special	18	—	MR	MC11/508

Ref. No.	Part No.	Description 1 2 3 4	No. off	Matl. Spec.	Cl. of St. / M.R.	Plate and Illust'n No.
		MAINPLANE, INNER PORTION, PORT AND STARBOARD, GROUP (21, 22, 157 & 158F9701) (Mod. 1106 & 2129) (Cont'd)				
		RIB, TANK, INNER, 352.186, PORT AND STARBOARD (1 & 2F9968) (Pre Mod. 1106)	–	–		MC12/509
	–	RIB, TANK, INNER, 352.186, PORT AND STARBOARD (13 & 14F9968) (Mod. 1106) S.O.O.	–	–		
		Spares for:–				
	8F7565	Angle, tank, top port, bottom starboard, . . . No. 3 tank	1	L72	MR	MC12/510
	9F7565	Angle, tank, bottom port, top, starboard, . . No. 3 tank	1	L72	MR	MC12/511
	10F7565	Angle, tank, top port, bottom starboard, . . . No. 4 tank	1	L72	MR	MC12/512
	11F7565	Angle, tank, bottom port, top starboard, . . . No. 4 tank	1	L72	MR	MC12/513
	17F7565	Angle, tank, top port, bottom starboard, . . . No. 6 tank	1	L72	MR	MC12/514
	18F7565	Angle, tank, bottom port, top starboard, . . . No. 6 tank	1	L72	MR	MC12/515
	6F7565	Boom, top, port	1	L72	MR	MC12/516
	98F7565	Boom, top, starboard	1	L72	MR	MC12/517
	7F7565	Boom, bottom, port	1	L72	MR	MC12/518
	99F7565	Boom, bottom, starboard	1	L72	MR	MC12/519
	2F8689	Housing, tie rod, top, port	1	L65	MR	
	1F8689	Housing, tie rod, top, starboard	1	L65	MR	
1510393	3F8689	Housing, tie rod, bottom, port	1	L65	MR	
	4F8689	Housing, tie rod, bottom, starboard	1	L65	MR	
		Attachments–Housing, Part Nos. 1, 2, 3 & 4F8689				
28D/9133011	A25/2C	Bolt, 2 BA	2	–	C	
28D/9133012	A25/3C	Bolt, 2 BA	2	–	C	
28M/1012015	AGS2001/C1/66	Nut, stiff, 2 BA	4	–	C	
28W/9419402	SP13/C	Washer, 2 BA	4	–	C	
20872	100F7565	Strip, angle joint, No. 3 tank	2	L72	MR/C	MC12/520
20873	101F7565	Strip, angle joint, No. 3 tank	2	L72	MR/C	MC12/521
20874	102F7565	Strip, angle joint, No. 4 tank	2	L72	MR/C	MC12/522
20875	103F7565	Strip, angle joint, No. 4 tank	2	L72	MR/C	MC12/523
20876	104F7565	Strip, angle joint, No. 6 tank	1	L72	MR/C	MC12/524
20877	105F7565	Strip, angle joint, No. 6 tank	1	L72	MR/C	MC12/525
	19F8667	Strip, angle joint, No. 6 tank	1	L72	MR	MC12/526
	20F8667	Strip, angle joint, No. 6 tank	1	L72	MR	MC12/527

Ref. No.	Part No.	Description 1 2 3 4	No. off	Matl. Spec.	Cl. of St. / M.R.	Plate and Illust'n No.
		MAINPLANE, INNER PORTION, PORT AND STARBOARD, GROUP (21, 22, 157 & 158F9701) (Mod. 1106 & 2129) (Cont'd)				
	–	RIB, TANK, INNER, 366.186, PORT AND STARBOARD (1 & 2F9969) (Pre Mod. 1106)	–	–		MC12/528
	–	RIB, TANK, INNER, 366.186, PORT AND STARBOARD (11 & 12F9969) (Mod. 1106) S.O.O.	–	–		
		Spares for:–				
	8F7566	Angle, tank, top port, bottom starboard, . . . No. 3 tank	1	L72	MR	MC12/529
	9F7566	Angle, tank, bottom port, top starboard, . . . No. 3 tank	1	L72	MR	MC12/530
	10F7566	Angle, tank, top port, bottom starboard, . . . No. 4 tank	1	L72	MR	MC12/531
	11F7566	Angle, tank, bottom port, top starboard, . . . No. 4 tank	1	L72	MR	MC12/532
	17F8668	Angle, tank, top port, bottom starboard, . . . No. 6 tank	1	L72	MR	MC12/533
	18F8668	Angle, tank, bottom port, top starboard, . . . No. 6 tank	1	L72	MR	MC12/534
	6F7566	Boom, top, port	1	L72	MR	MC12/535
	92F7566	Boom, top, starboard	1	L72	MR	MC12/536
	7F7566	Boom, bottom, port	1	L75	MR	MC12/537
	93F7566	Boom, bottom, starboard	1	L72		MC12/538
	2F8689	Housing, tie rod, top, port	1	L65	MR	
	1F8689	Housing, tie rod, top, starboard	1	L65	MR	
1510393	3F8689	Housing, tie rod, bottom, port	1	L65	MR	
	4F8689	Housing, tie rod, bottom, starboard	1	L65	MR	
		Attachments–Housing, Part Nos. 1, 2, 3 & 4F8689				
28D/9133011	A25/2C	Bolt, 2 BA	2	–	C	
28D/9133012	A25/3C	Bolt, 3 BA	2	–	C	
28M/1012015	AGS2001/C1/66	Nut, stiff, 2 BA	4	–	C	
28W/9419402	SP13/C	Washer, 2 BA	4	–	C	
	94F7566	Strip, angle joint, No. 3 tank	2	L72	MR	MC12/539
	95F7566	Strip, angle joint, No. 3 tank	2	L72	MR	MC12/540
	96F7566	Strip, angle joint, No. 4 tank	2	L72	MR	MC12/541
	97F7566	Strip, angle joint, No. 4 tank	2	L72	MR	MC12/542
	98F7566	Strip, angle joint, No. 6 tank	1	L72	MR	MC12/543
	99F7566	Strip, angle joint, No. 6 tank	1	L72	MR	MC12/544
	19F8668	Strip, angle joint, No. 6 tank	1	L72	MR	MC12/545
	20F8668	Strip, angle joint, No. 6 tank	1	L72	MR	MC12/546

Ref. No.	Part No.	Description 1 2 3 4	No. off	Matl. Spec.	Cl. of St. / M.R.	Plate and Illust'n No.
		MAINPLANE, INNER PORTION, PORT AND STARBOARD, GROUP (21, 22, 157 & 158F9701) (Mod. 1106 & 2129) (Cont'd)				
		RIB, TANK, INNER, 380.186, PORT AND STARBOARD (1 & 2F9970) (Pre Mod. 1106)				MC12/547
		RIB, TANK, INNER, 380.186, PORT AND STARBOARD (21 & 22F9970) (Mod. 1106) S.O.O.				
		Spares for:–				
	8F7567	Angle, tank, bottom port, top starboard, . . . No. 3 tank	1	L72	MR	MC12/548
	9F7567	Angle, tank, top port, bottom starboard . . . No. 3 tank	1	L72	MR	MC12/549
	10F7567	Angle, tank, bottom port, top starboard, . . . No. 4 tank	1	L72	MR	MC12/550
	11F7567	Angle, tank, top port, bottom starboard, . . . No. 4 tank	1	L72	MR	MC12/551
	17F8669	Angle, tank, top port, bottom starboard, . . . No. 6 tank	1	L72	MR	MC12/552
	18F8669	Angle, tank, bottom port, top starboard, . . . No. 6 tank	1	L72	MR	MC12/553
	3F9970	Boom, top, port	1	L72	MR	MC12/554
	5F9970	Boom, top, starboard	1	L72	MR	MC12/555
	4F9970	Boom, bottom, port	1	L72	MR	MC12/556
	6F9970	Boom, bottom, starboard	1	L72	MR	MC12/557
	2F8689	Housing, tie rod, top, port	1	L65	MR	
	1F8689	Housing, tie rod, top, starboard	1	L65	MR	
1510393	3F8689	Housing, tie rod, bottom, port	1	L65	MR	
	4F8689	Housing, tie rod, bottom, starboard	1	L65	MR	
		Attachments—Housing Part Nos. 1, 2, 3 & 4F8689				
28D/9133011	A25/2C	Bolt, 2 BA	2	–	C	
28D/9133012	A25/3C	Bolt, 2 BA	2	–	C	
28M/1012015	AGS2001/C1/66	Nut, stiff, 2 BA	4	–	C	
28W/9419402	SP13/C	Washer, 2 BA	4	–	C	
	94F7567	Strip, angle joint, No. 3 tank	2	L72	MR	MC12/558
	95F7567	Strip, angle joint, No. 3 tank	2	L72	MR	MC12/559
	96F7567	Strip, angle joint, No. 4 tank	2	L72	MR	MC12/560
	97F7567	Strip, angle joint, No. 4 tank	2	L72	MR	MC12/561
	98F7567	Strip, angle joint, No. 6 tank	1	L72	MR	MC12/562
	99F7567	Strip, angle joint, No. 6 tank	1	L72	MR	MC12/563
	39F8669	Strip, angle joint, No. 6 tank	1	L72	MR	MC12/564
	40F8669	Strip, angle joint, No. 6 tank	1	L72	MR	MC12/565
		RIB, TANK, INNER, 394.186, PORT STARBOARD (1 & 2F9971) (Pre-Mod. 1106)				MC12/566
		Spares for:–				
	8F7568	Angle, tank, bottom port, top starboard, . . . No. 3 tank	1	L72		MC12/567
	9F7568	Angle, tank, top port, bottom starboard, . . . No. 3 tank	1	L72		MC12/568

Ref. No.	Part No.	Description (1 2 3 4)	No. off	Matl. Spec.	Cl. of St. / M.R.	Plate and Illust'n No.
		RIB, TANK, INNER 394.186, PORT AND STARBOARD (1 & 2F9971) (Pre-Mod. 1106) (Cont'd)				
	10F7568	Angle, tank, bottom port, top starboard, . . . No. 4 tank	1	L72		MC12/569
	11F7568	Angle, tank, top port, bottom starboard, . . . No. 4 tank	1	L72		MC12/570
	17F8670	Angle, tank, top port, bottom starboard, . . . No. 6 tank	1	L72	MR	MC12/571
	18F8670	Angle, tank, bottom port, top starboard, . . . No. 6 tank	1	L72	MR	MC12/572
	3F9971	Boom, top, port	1	L72	MR	MC12/573
	5F9971	Boom, top, starboard	1	L72	MR	MC12/574
	4F9971	Boom, bottom, port	1	L72	MR	MC12/575
	6F9971	Boom, bottom, starboard	1	L72	MR	MC12/576
	2F8689	Housing, tie rod, top, port	1	L65	MR	
	1F8689	Housing, tie rod, top, starboard	1	L65	MR	
1510393	3F8689	Housing, tie rod, bottom, port	1	L65	MR	
	4F8689	Housing, tie rod, bottom, starboard	1	L65	MR	
		Attachments—Housing, Part Nos. 1, 2, 3 & 4F8689				
28D/9133011	A25/2C	Bolt, 2 BA	2	—	C	
28D/9133012	A25/3C	Bolt, 2 BA	2	—	C	
28M/1012015	AGS2001/C1/66	Nut, stiff, 2 BA	4	—	C	
28W/9419402	SP13/C	Washer, 2 BA	4	—	C	
	88F7568	Strip, angle, No. 3 tank	2	L72	MR	MC12/577
	89F7568	Strip, angle joint, No. 3 tank	2	L72	MR	MC12/578
	90F7568	Strip, angle joint, No. 4 tank	2	L72	MR	MC12/579
	91F7568	Strip, angle joint, No. 4 tank	2	L72	MR	MC12/580
	92F7568	Strip, angle joint, No. 6 tank	1	L72	MR	MC12/581
	93F7568	Strip, angle joint, No. 6 tank	1	L72	MR	MC12/582
	25F8670	Strip, angle joint, No. 6 tank	1	L72	MR	MC12/583
	26F8670	Strip, angle joint, No. 6 tank	1	L72	MR	MC12/584
		RIB, TANK, INNER, 394.186, PORT . . . . . AND STARBOARD (1 & 2F11735) (Mod. 1106) S.O.O.	—	—		MC13/585
		Spares for:—				
	14F11735	Angle, tank, forward, No. 3 tank, port	1	L73	MR	MC13/586
	13F11735	Angle, tank, forward, No. 3 tank, starboard	1	L73	MR	MC13/587
	16F11735	Angle, tank, aft, No. 3 tank, port	1	L73	MR	MC13/588
	15F11735	Angle, tank, aft, No. 3 tank, starboard	1	L73	MR	MC13/589
	18F11735	Angle, tank, forward, No. 4 tank, port	1	L73	MR	MC13/590
	17F11735	Angle, tank, forward, No. 4 tank, starboard	1	L73	MR	MC13/591
	19F11735	Angle, tank, aft, No. 4 tank, port	1	L73	MR	MC13/592
	20F11735	Angle, tank, aft, No. 4 tank, starboard	1	L73	MR	MC13/593

Ref. No.	Part No.	Description (1 2 3 4)	No. off	Matl. Spec.	Cl. of St. / M.R.	Plate and Illust'n No.
		RIB, TANK, INNER, 394.186, PORT AND STARBOARD (1 & 2F11735) (Mod. 1106) S.O.O. (Cont'd)				
	21F11735	Angle, tank, forward, No. 6 tank, port	1	L73	MR	MC13/594
	22F11735	Angle, tank, forward, No. 6 tank, starboard	1	L73	MR	MC13/595
	23F11735	Angle, tank, aft, No. 6 tank, port	1	L73	MR	MC13/596
	24F11735	Angle, tank, aft, No. 6 tank, starboard	1	L73	MR	MC13/597
	118F11735	Angle, joint, bottom port, top starboard, .. No. 3 tank	1	L73	MR	MC13/598
	119F11735	Angle, joint, top port, bottom starboard, .. No. 3 tank	1	L73	MR	MC13/599
	125F11735	Angle, joint, bottom port, top starboard, .. No. 4 tank	1	L73	MR	MC13/600
	126F11735	Angle, joint, top port, bottom starboard, .. No. 4 tank	1	L73	MR	MC13/601
	123F11735	Angle, joint, bottom port, top starboard, .. No. 6 tank	1	L72	MR	MC13/602
	124F11735	Angle, joint, top port, bottom starboard ... No. 6 tank	1	L73	MR	MC13/603
	3F11735	Boom, top, port	1	L65	MR	
	4F11735	Boom, top, starboard	1	L65	MR	
	5F11735	Boom, bottom, port	1	L65	MR	
	6F11735	Boom, bottom, starboard	1	L65	MR	
	2F8689	Housing, tie rod, top, port	1	L65	MR	
	1F8689	Housing, tie rod, top, starboard	1	L65	MR	
1510393	3F8689	Housing, tie rod, bottom, port	1	L65	MR	
	4F8689	Housing, tie rod, bottom, starboard	1	L65	MR	
		Attachments—Housing, Part Nos. 1, 2, 3 & 4F8689				
28D/9133012	A25/3C	Bolt, 2 BA	2	—	C	
28D/1200119	A25/4C	Bolt, 2 BA	2	—	C	
28M/1012015	AGS2001/C1/66	Nut, stiff, 2 BA	4	-	C	
28W/9419402	SP13/C	Washer, 2 BA	4	-	C	
	—	RIB, TANK, INNER, 408.186, PORT AND STARBOARD (1 & 2F9972) (Pre Mod. 1106)	—	—		MC13/604
		Spares for:				
	105F7569	Angle, tank, bottom port, top starboard, ... No. 3 tank	1	L72	MR	MC13/605
	106F7569	Angle, tank, top port, bottom starboard, ... No. 3 tank	1	L72	MR	MC13/606
	107F7569	Angle, tank, bottom port, top starboard ... No. 4 tank	1	L72	MR	MC13/607
	108F7569	Angle, tank, top port, bottom starboard, ... No. 4 tank	1	L72	MR	MC13/608
	17F8671	Angle, tank, top port, bottom starboard, ... No. 6 tank	1	L72	MR	MC13/609
	18F8671	Angle, tank, bottom port, top starboard, ... No. 6 tank	1	L72	MR	MC13/610

Ref. No.	Part No.	Description 1 2 3 4	No. off	Matl. Spec.	Cl. of St. / M.R.	Plate and Illust'n No.
		RIB, TANK, INNER, 408.186, PORT AND STARBOARD (1 & 2F9972) (Pre Mod. 1106) (Cont'd)				
	3F9972	Boom, top, port	1	L72	MR	
	5F9972	Boom, top, starboard	1	L72	MR	
	4F9972	Boom, bottom, port	1	L72	MR	
	6F9972	Boom, bottom, starboard	1	L72	MR	
	10F8689	Housing, tie rod, top, port	1	L65	MR	
	9F8689	Housing, tie rod, top, starboard	1	L65	MR	
	11F8689	Housing, tie, rod, bottom, port	1	L65	MR	
	12F8689	Housing, tie rod, bottom, starboard	1	L65	MR	
		Attachments—Housing, Part No. 9, 10, 11 & 12F8689				
28D/9133011	A25/2C	Bolt, 2 BA	2	—	C	
28D/9133012	A25/3C	Bolt, 2 BA	2	—	C	
28M/1012015	AGS2001/C1/66	Nut, stiff, 2 BA	4	—	C	
28W/9419402	SP13/C	Washer, 2 BA	4	—	C	
	129F7569	Strip, angle joint, No. 3 tank	2	L72	MR	MC13/611
	130F7569	Strip, angle joint, No. 3 tank	2	L72	MR	MC13/612
	131F7569	Strip, angle joint, No. 4 tank	2	L72	MR	MC13/613
	132F7569	Strip, angle joint, No. 4 tank	2	L72	MR	MC13/614
	133F7569	Strip, angle joint, No. 6 tank	1	L72	MR	MC13/615
	134F7569	Strip, angle joint, No. 6 tank	1	L72	MR	MC13/616
	23F8671	Strip, angle joint, No. 6 tank	1	L72	MR	MC13/617
	24F8671	Strip, angle joint, No. 6 tank	1	L72	MR	MC13/618
	—	RIB, TANK, INNER, 408.186, PORT AND STARBOARD (1 & 2F11736) (Mod. 1106) S.O.O.	—	—		MC13/619
		Spares for:—				
	13F11736	Angle, tank, forward, No. 3, tank, port	1	L73	MR	MC13/620
	14F11736	Angle, tank, forward, No. 3 tank, starboard	1	L73	MR	MC13/621
	15F11736	Angle, tank, aft, No. 3 tank, port	1	L73	MR	MC13/622
	16F11736	Angle, tank, aft, No. 3 tank, starboard	1	L73	MR	MC13/623
	17F11736	Angle, tank, forward, No. 4 tank, port	1	L73	MR	MC13/624
	18F11736	Angle, tank, forward, No. 4 tank, starboard	1	L73	MR	MC13/625
	19F11736	Angle, tank, aft, No. 4 tank, port	1	L73	MR	MC13/626
	20F11736	Angle, tank, aft, No. 4 tank, starboard	1	L73	MR	MC13/627
	21F11736	Angle, tank, forward, No. 6 tank, port	1	L73	MR	MC13/628
	22F11736	Angle, tank, forward, No. 6 tank, starboard	1	L73	MR	MC13/629
	23F11736	Angle, tank, aft, No. 6 tank, port	1	L73	MR	MC13/630
	24F11736	Angle, tank, aft, No. 6 tank, starboard	1	L73	MR	MC13/631
	41F11736	Angle, joint, top port, bottom starboard, No. 3 tank	1	L73	MR	MC13/632
	42F11736	Angle, joint, bottom port, top starboard, No. 3 tank	1	L73	MR	MC13/633

Ref. No.	Part No.	Description 1 2 3 4	No. off	Matl. Spec.	Cl. of St. M.R.	Plate and Illust'n No.
		RIB, TANK, INNER, 408.186, PORT AND STARBOARD (1 & 2F11736) (Mod. 1106) S.O.O. (Cont'd)				
	43F11736	Angle, joint, top port, bottom starboard, .. No. 4 tank	1	L73	MR	MC13/634
	44F11736	Angle, joint, bottom port, top starboard, .. No. 4 tank	1	L73	MR	MC13/635
	45F11736	Angle, joint, top port, bottom starboard, .. No. 6 tank	1	L73	MR	MC13/636
	46F11736	Angle, joint, bottom port, top starboard, .. No. 6 tank	1	L73	MR	MC13/637
	3F11736	Boom, top, port	1	L65	MR	
	4F11736	Boom, top, starboard	1	L65	MR	
	5F11736	Boom, bottom, port	1	L65	MR	
	6F11736	Boom, bottom, starboard	1	L65	MR	
	10F8689	Housing, tie rod, top, port	1	L65	MR	
	9F8689	Housing, tie rod, top, starboard	1	L65	MR	
	11F8689	Housing, tie rod, bottom, port	1	L65	MR	
	12F8689	Housing, tie rod, bottom, starboard, ...	1	L65	MR	
		Attachments—Housing, Part Nos. 9, 10, 11 & 12F8689				
28D/9133012	A25/3C	Bolt, 2 BA	2	—	C	
28D/1200119	A25/4C	Bolt, 2 BA	2	—	C	
28M/1012015	AGS2001/C1/66	Nut, stiff, 2 BA	4	—	C	
28W/9419402	SP13/C	Washer, 2 BA	4	—	C	
		RIB, TANK, INNER, 422.186, PORT AND STARBOARD (1 & 2F9973) (Pre-Mod. 1106)				MC13/638
		Spares for:-				
	8F7570	Angle, tank, bottom port, top starboard, ... No. 3 tank	1	L72		MC13/639
	9F7570	Angle, tank, top port, bottom starboard, ... No. 3 tank	1	L72		MC13/640
	10F7570	Angle, tank, bottom port, top starboard, ... No. 4 tank	1	L72		MC13/641
	11F7570	Angle, tank, top port, bottom starboard, ... No. 4 tank	1	L72	MR	MC13/642
	17F8672	Angle, tank, top port, bottom starboard, ... No. 6 tank	1	L72	MR	MC13/643
	18F8672	Angle, tank, bottom port, top starboard, ... No. 6 tank	1	L72	MR	MC13/644
	3F9973	Boom, top, port	1	L72	MR	
	5F9973	Boom, top, starboard	1	L72	MR	
	4F9973	Boom, bottom, port	1	L72	MR	
	6F9973	Boom, bottom, starboard	1	L72	MR	
	10F8689	Housing, tie rod, top, port	1	L65	MR	
	9F8689	Housing, tie rod, top, starboard	1	L65	MR	
	11F8689	Housing, tie rod, bottom, port	1	L65	MR	
	12F8689	Housing, tie rod, bottom, starboard	1	L65	MR	

Ref. No.	Part No.	Description (1 2 3 4)	No. off	Matl. Spec.	Cl. of St. / M.R.	Plate and Illust'n No.
		RIB, TANK, INNER, 422.186, PORT AND STARBOARD (1 & 2F9973) (Pre Mod. 1106) (Cont'd)				
		Attachments—Housing, Part Nos. 9, 10, 11 and 12F8689				
28D/9133011	A25/2C	Bolt, 2 BA	2	—	C	
28D/9133012	A25/3C	Bolt, 2 BA	2	—	C	
28M/1012015	AGS2001/C1/66	Nut, stiff, 2 BA	4	—	C	
28W/9419402	SP13/C	Washer, 2 BA	4	—	C	
	88F7570	Strip, angle joint, No. 3 tank	2	L72	MR	MC13/645
	89F7570	Strip, angle joint, No. 3 tank	2	L72	MR	MC13/646
	90F7570	Strip, angle joint, No. 4 tank	2	L72	MR	MC13/647
	91F7570	Strip, angle joint, No. 4 tank	2	L72	MR	MC13/648
	92F7570	Strip, angle joint, No. 6 tank	1	L72	MR	MC13/649
	93F7570	Strip, angle joint, No. 6 tank	1	L72	MR	MC13/650
	19F8672	Strip, angle joint, No. 6 tank	1	L72	MR	MC13/651
	20F8672	Strip, angle joint, No. 6 tank	1	L72	MR	MC13/652
		RIB, TANK, INNER, 422.186, PORT AND STARBOARD (1 & 2F11737) (Mod. 1106) S.O.O.				MC13/653
		Spares for:—				
	13F11737	Angle, tank, forward, No. 3 tank, port	1	L73	MR	MC13/654
	14F11737	Angle, tank, forward, No. 3 tank, starboard	1	L73	MR	MC13/655
	15F11737	Angle, tank, aft, No. 3 tank, port	1	L73	MR	MC13/656
	16F11737	Angle, tank, aft, No. 3 tank, starboard	1	L73	MR	MC13/657
	17F11737	Angle, tank, forward, No. 4 tank, port	1	L73	MR	MC13/658
	18F11737	Angle, tank, forward, No. 4 tank, starboard	1	L73	MR	MC13/659
	19F11737	Angle, tank, aft, No. 4 tank, port	1	L73	MR	MC13/660
	20F11737	Angle, tank, aft, No. 4 tank, starboard	1	L73	MR	MC13/661
	21F11737	Angle, tank, forward, No. 6 tank, port	1	L73	MR	MC13/662
	22F11737	Angle, tank, forward, No. 6 tank, starboard	1	L73	MR	MC13/663
	23F11737	Angle, tank, aft, No. 6 tank, port	1	L73	MR	MC13/664
	24F11737	Angle, tank, aft, No. 6 tank, starboard	1	L73	MR	MC13/665
	41F11737	Angle, joint, top port, bottom starboard, No. 3 tank	1	L73	MR	MC13/666
	42F11737	Angle, joint, bottom port, top starboard, No. 3 tank	1	L73	MR	MC13/667
	43F11737	Angle, joint, top port, bottom starboard, No. 4 tank	1	L73	MR	MC13/668
	44F11737	Angle, joint, bottom port, top starboard, No. 4 tank	1	L73	MR	MC13/669
	45F11737	Angle joint, top port, bottom starboard, No. 6 tank	1	L73	MR	MC13/670
	46F11737	Angle, joint, bottom port, top starboard, No. 6 tank	1	L73	MR	MC13/671

Ref. No.	Part No.	Description (1 2 3 4)	No. off	Matl. Spec.	Cl. of St. M.R.	Plate and Illust'n No.
		RIB, TANK, INNER, 422.186, PORT AND STARBOARD (1 & 2F11737) (Mod. 1106) S.O.O. (Cont'd)				
	3F11737	Boom, top, port	1	L65	MR	
	4F11737	Boom, top, starboard	1	L65	MR	
	5F11737	Boom, bottom, port	1	L65	MR	
	6F11737	Boom, bottom, starboard	1	L65	MR	
	10F8689	Housing, tie rod, top, port	1	L65	MR	
	9F8689	Housing, tie rod, top, starboard	1	L65	MR	
	11F8689	Housing, tie rod, bottom, port	1	L65	MR	
	12F8689	Housing, tie rod, bottom, starboard	1	L65	MR	
		Attachments—Housing, Part Nos. 9, 10, 11 & 12F8689				
28D/9133012	A25/3C	Bolt, 2 BA	2	—	C	
28D/1200119	A25/4C	Bolt, 2 BA	2	—	C	
28M/1012015	AGS2001/C1/66	Nut, stiff, 2 BA	4	—	C	
28W/9419492	SP13/C	Washer, 2 BA	4	—	C	
	—	RIB, TANK, INNER, 436.186, PORT AND STARBOARD (1 & 2F9974) (Pre Mod. 1106)	—	—		MC14/672
		Spares for:—				
	8F7571	Angle, tank, top port, bottom starboard, No. 3 tank	1	L72		MC14/673
	9F7571	Angle, tank, bottom port, top starboard, No. 3 tank	1	L72		MC14/674
	10F7571	Angle, tank, top port, bottom starboard, No. 4 tank	1	L72		MC14/675
	11F7571	Angle, tank, bottom port, top starboard, No. 4 tank	1	L72		MC14/676
	17F8673	Angle, tank, top port, bottom starboard, No. 6 tank	1	L72	MR	MC14/677
	18F8673	Angle, tank, bottom port, top starboard, No. 6 tank	1	L72	MR	MC14/678
	3F9974	Boom, top, port	1	L72	MR	
	5F9974	Boom, top, starboard	1	L72	MR	
	4F9974	Boom, bottom, port	1	L72	MR	
	6F9974	Boom, bottom, starboard	1	L72	MR	
	10F8689	Housing, tie rod, top, port	1	L65	MR	
	9F8689	Housing, tie rod, top, starboard	1	L65	MR	
	11F8689	Housing, tie rod, bottom, port	1	L65	MR	
	12F8689	Housing, tie rod, bottom, starboard	1	L65	MR	
		Attachments—Housing, Part Nos. 9, 10, 11 & 12F8689				
28D/9133011	A25/2C	Bolt, 2 BA	2	—	C	
28D/9133012	A25/3C	Bolt, 2 BA	2	—	C	
28M/1012015	AGS2001/C1/66	Nut, stiff, 2 BA	4	—	C	
28W/9419402	SP13/C	Washer, 2 BA	4	—	C	
	90F7571	Strip, angle joint, No. 3 tank	2	L72	MR	MC14/679
	91F7571	Strip, angle joint, No. 3 tank	2	L72	MR	MC14/680
	92F7571	Strip, angle joint, No. 4 tank	1	L72	MR	MC14/681

Ref. No.	Part No.	Description 1 2 3 4	No. off	Matl. Spec.	Cl. of St. M.R.	Plate and Illust'n No.
		RIB, TANK, INNER, 436.186, PORT AND STARBOARD (1 & 2F9974) (Pre-Mod. 1106) (Cont'd.)				
	93F7571	Strip, angle joint, No. 4 tank	1	L72	MR	MC14/682
	94F7571	Strip, angle joint, No. 4 tank	1	L72	MR	MC14/683
	95F7571	Strip, angle joint, No. 4 tank	1	L72	MR	MC14/684
	96F7571	Strip, angle joint, No. 6 tank	1	L72	MR	MC14/685
	97F7571	Strip, angle joint, No. 6 tank	1	L72	MR	MC14/686
	19F8673	Strip, angle joint, No. 6 tank	1	L72	MR	MC14/687
	20F8673	Strip, angle joint, No. 6 tank	1	L72	MR	MC14/688
		RIB, TANK, INNER, 436.186, PORT AND STARBOARD (1 & 2F11738) (Mod. 1106) S.O.O.	—	—		MC14/689
		Spares for:—				
	15F11738	Angle, tank, forward, No. 3 tank, port	1	L73	MR	MC14/690
	16F11738	Angle, tank, forward, No. 3 tank, starboard	1	L73	MR	MC14/691
	13F11738	Angle, tank, aft, No. 3 tank, port	1	L73	MR	MC14/692
	14F11738	Angle, tank, aft, No. 3 tank, starboard	1	L73	MR	MC14/693
	17F11738	Angle, tank, forward, No. 4 tank, port	1	L73	MR	MC14/694
	18F11738	Angle, tank, forward, No. 4 tank, starboard	1	L73	MR	MC14/695
	19F11738	Angle, tank, aft, No. 4 tank, port	1	L73	MR	MC14/696
	20F11738	Angle, tank, aft, No. 4 tank, starboard	1	L73	MR	MC14/697
	21F11738	Angle, tank, forward, No. 6 tank, port	1	L73	MR	MC14/698
	22F11738	Angle, tank, forward, No. 6 tank, starboard	1	L73	MR	MC14/699
	23F11738	Angle, tank, aft, No. 6 tank, port	1	L73	MR	MC14/700
	24F11738	Angle, tank, aft, No. 6 tank, starboard	1	L73	MR	MC14/701
	97F11738	Angle, joint, top port, No. 3 tank	1	L73	MR	MC14/702
	96F11738	Angle, joint, top starboard, No. 3 tank	1	L73	MR	MC14/703
	99F11738	Angle, joint, bottom port, No. 3 tank	1	L73	MR	MC14/704
	98F11738	Angle, joint, bottom starboard, No. 3 tank	1	L73	MR	MC14/705
	101F11738	Angle, joint, top port, No. 4 tank	1	L73	MR	MC14/706
	100F11738	Angle, joint, top starboard, No. 4 tank	1	L73	MR	MC14/707
	103F11738	Angle, joint, bottom port, No. 4 tank	1	L73	MR	MC14/708
	102F11738	Angle, joint, bottom starboard, No. 4 tank	1	L73	MR	MC14/709
	105F11738	Angle, joint, top port, No. 6 tank	1	L73	MR	MC14/710
	104F11738	Angle, joint, top starboard, No. 6 tank	1	L73	MR	MC14/711
	107F11738	Angle, joint, bottom port, No. 6 tank	1	L73	MR	MC14/712
	106F11738	Angle, joint, bottom starboard, No. 6 tank	1	L73	MR	MC14/713

Ref. No.	Part No.	Description (1 2 3 4)	No. off	Matl. Spec.	Cl. of St. / M.R.	Plate and Illust'n No.
		RIB, TANK, INNER, 436.186, PORT AND STARBOARD (1 & 2F11738) (Mod. 1106) S.O.O. (Cont'd)				
	3F11738	Boom, top, port	1	L65	MR	
	4F11738	Boom, top, starboard	1	L65	MR	
	5F11738	Boom, bottom, port	1	L65	MR	
	6F11738	Boom, bottom, starboard	1	L65	MR	
	10F8689	Housing, tie rod, top, port	1	L65	MR	
	9F8689	Housing, tie rod, top, starboard	1	L65	MR	
	11F8689	Housing, tie rod, bottom, port	1	L65	MR	
	12F8689	Housing, tie rod, bottom, starboard	1	L65	MR	
		Attachments—Housing, Part Nos. 9, 10, 11 & 12F8689				
28D/9133012	A25/3C	Bolt, 2 BA	1	—	C	
28D/1200119	A25/4C	Bolt, 2 BA	1	—	C	
28D/9133013	A25/5C	Bolt, 2 BA	2	—	C	
28M/1012015	AGS2001/C1/66	Nut, stiff, 2 BA	4	—	C	
28W/9419402	SP13/C	Washer, 2 BA	4	—	C	
		RIB, TANK, INNER, 448.311, PORT AND STARBOARD (1 & 2F9975) (Pre Mod. 1106)				MC14/714
		Spares for:—				
	8F7572	Angle, tank, bottom port, top starboard, No. 3 tank	1	L72		MC14/715
	9F7572	Angle, tank, top port, bottom starboard, No. 3 tank	1	L72		MC14/716
	10F7572	Angle, tank, bottom port, top starboard, No. 4 tank	1	L72		MC14/717
	11F7572	Angle, tank, top port, bottom starboard No. 4 tank	1	L72		MC14/718
	17F8674	Angle, tank, top port, bottom starboard, No. 6 tank	1	L72	MR	MC14/719
	18F8674	Angle, tank, bottom port, top starboard, No. 6 tank	1	L72	MR	MC14/720
	5F9975	Boom, top, port	1	L72	MR	
	3F9975	Boom, top, starboard	1	L72	MR	
	4F9975	Boom, bottom, port	1	L72	MR	
	6F9975	Boom, bottom, starboard	1	L72	MR	
	10F8689	Housing, tie rod, top port	1	L65	MR	
	9F8689	Housing, tie rod, top starboard	1	L65	MR	
	11F8689	Housing, tie rod, bottom port	1	L65	MR	
	12F8689	Housing, tie rod, bottom starboard	1	L65	MR	
		Attachments—Housing, Part Nos. 9, 10, 11 & 12F8689				
28D/9133011	A25/2C	Bolt, 2 BA	2	—	C	
28D/9133012	A25/3C	Bolt, 2 BA	2	—	C	
28M/1012015	AGS2001/C1/66	Nut, stiff, 2 BA	4	—	C	
28W/9419402	SP13/C	Washer, 2 BA	4	—	C	
	89F7572	Strip, angle joint, No. 3 tank	2	L72	MR	MC14/721
	90F7572	Strip, angle joint, No. 3 tank	2	L72	MR	MC14/722

Ref. No.	Part No.	Description 1 2 3 4	No. off	Matl. Spec.	Cl. of St. M.R.	Plate and Illust'n No.
		RIB, TANK, INNER, 448.311, PORT AND STARBOARD (1 & 2F9975) (Pre-Mod. 1106) (Cont'd.)				
	91F7572	Strip, angle joint, No. 4 tank	2	L72	MR	MC14/723
	92F7572	Strip, angle joint, No. 4 tank	2	L72	MR	MC14/724
	93F7572	Strip, angle joint, No. 6 tank	1	L72	MR	MC14/725
	94F7572	Strip, angle joint, No. 6 tank	1	L72	MR	MC14/726
	19F8674	Strip, angle joint, No. 6 tank	1	L72	MR	MC14/727
	20F8674	Strip, angle joint, No. 6 tank	1	L72	MR	MC14/728
		RIB, TANK, INNER, 448.311, PORT AND STARBOARD (1 & 2F11739) (Mod. 1106) S.O.O.				MC14/729
		Spares for:—				
	13F11739	Angle, tank, forward, No. 3 tank, port	1	L72	MR	MC14/730
	14F11739	Angle, tank, forward, No. 3 tank, starboard	1	L72	MR	MC14/731
	15F11739	Angle, tank, aft, No. 3 tank, port	1	L72	MR	MC14/732
	16F11739	Angle, tank, aft, No. 3 tank, starboard	1	L72	MR	MC14/733
	17F11739	Angle, tank, forward, No. 4 tank, port	1	L72	MR	MC14/734
	18F11739	Angle, tank, forward, No. 4 tank, starboard	1	L72	MR	MC14/735
	19F11739	Angle, tank, aft, No. 4 tank, port	1	L72	MR	MC14/736
	20F11739	Angle, tank, aft, No. 4 tank, starboard	1	L72	MR	MC14/737
	21F11739	Angle, tank, forward, No. 6 tank, port	1	L72	MR	MC14/738
	22F11739	Angle, tank, forward, No. 6 tank, starboard	1	L72	MR	MC14/739
	23F11739	Angle, tank, aft, No. 6 tank, port	1	L72	MR	MC14/740
	24F11739	Angle, tank, aft, No. 6 tank, starboard	1	L72	MR	MC14/741
	107F11739	Angle, joint, top, port, No. 3 tank	1	L72	MR	MC14/742
	108F11739	Angle, joint, top, starboard, No. 3 tank	1	L72	MR	MC14/743
	109F11739	Angle, joint, bottom, port, No. 3 tank	1	L72	MR	MC14/744
	110F11739	Angle, joint, bottom, starboard, No. 3 tank	1	L72	MR	MC14/745
	111F11739	Angle, joint, top, port, No. 4 tank	1	L72	MR	MC14/746
	112F11739	Angle, joint, top, starboard, No. 4 tank	1	L72	MR	MC14/747
	113F11739	Angle, joint, bottom, port, No. 4 tank	1	L72	MR	MC14/748
	114F11739	Angle, joint, bottom, starboard, No. 4 tank	1	L72	MR	MC14/749
	143F11739	Angle, joint, top, port, No. 6 tank	1	L72	MR	MC14/750
	144F11739	Angle, joint, top, starboard, No. 6 tank	1	L72	MR	MC14/751
	117F11739	Angle, joint, bottom, port, No. 6 tank	1	L72	MR	MC14/752

Ref. No.	Part No.	Description (1 2 3 4)	No. off	Matl. Spec.	Cl. of St. M.R.	Plate and Illust'n No.
		RIB, TANK, INNER, 448.311, PORT & STARBOARD (1 & 2F11739) (Mod. 1106) S.O.O. (Cont'd.)				
	118F11739	Angle, joint, bottom starboard, No. 6 tank ...	1	L72	MR	MC14/753
	3F11739	Boom, top, port	1	L65	MR	
	4F11739	Boom, top, starboard	1	L65	MR	
	5F11739	Boom, bottom, port	1	L65	MR	
	6F11739	Boom, bottom, starboard	1	L65	MR	
	10F8689	Housing, tie rod, top, port	1	L65	MR	
	9F8689	Housing, tie rod, top, starboard	1	L65	MR	
	11F8689	Housing, tie rod, bottom, port	1	L65	MR	
	12F8689	Housing, tie rod, bottom, starboard	1	L65	MR	
		Attachments—Housing, Part Nos. 9, 10, 11 & 12F8689)				
28D/1200119	A25/4C	Bolt, 2 BA	2	—	C	
28D/9133013	A25/5C	Bolt, 2 BA	2	—	C	
28M/1012015	AGS2001/C1/66	Nut, stiff, 2 BA	4	—	C	
28W/9419402	SP13/C	Washer, 2 BA	4	—	C	
		RIB, TANK, INNER, 460.436, PORT & ..... STARBOARD (1 & 2F9976) (Pre-Mod. 1106)				MC14/754
		Spares for:—				
	8F7573	Angle, tank, top port, bottom starboard, ... No. 3 tank	1	L72		MC14/755
4018	9F7573	Angle, tank, bottom port, top starboard, ... No. 3 tank	1	L72	MR/C	MC14/756
	10F7573	Angle, tank, top port, bottom starboard, ... No. 4 tank	1	L72		MC14/757
	11F7573	Angle, tank, bottom port, top starboard, ... No. 4 tank	1	L72		MC14/758
	17F8675	Angle, tank, top port, bottom starboard, ... No. 6 tank	1	L72	MR	MC14/759
	18F8675	Angle, tank, bottom port, top starboard, ... No. 6 tank	1	L72	MR	MC14/760
	3F9976	Boom, top, port	1	L72	MR	
	5F9976	Boom, top, starboard	1	L72	MR	
	4F9976	Boom, bottom, port	1	L72	MR	
	6F9976	Boom, bottom, starboard	1	L72	MR	
	10F8689	Housing, tie rod, top, port	1	L65	MR	
	9F8689	Housing, tie rod, top, starboard	1	L65	MR	
	11F8689	Housing, tie rod, bottom, port	1	L65	MR	
	12F8689	Housing, tie rod, bottom, starboard	1	L65	MR	
		Attachments—Housing, Part Nos. 9, 10, 11 & 12F8689				
28D/9133011	A25/2C	Bolt, 2 BA	2	—	C	
28D/9133012	A25/3C	Bolt, 2 BA	2	—	C	
28M/1012015	AGS2001/C1/66	Nut, stiff, 2 BA	4	—	C	
28W/9419402	SP13/C	Washer, 2 BA	4	—	C	

Ref. No.	Part No.	Description (1 2 3 4)	No. off	Matl. Spec.	Cl. of St. M.R.	Plate and Illust'n No.
		RIB, TANK, INNER, 460.436, PORT & STARBOARD (1 & 2F9976) (Pre-Mod. 1106) (Cont'd.)				
	127F7573	Strip, angle joint, No. 3 tank	1	L72	MR	MC14/761
	128F7573	Strip, angle joint, No. 3 tank	1	L72	MR	MC14/762
	136F7573	Strip, angle joint, No. 3 tank	1	L72	MR	MC14/763
	137F7573	Strip, angle joint, No. 3 tank	1	L72	MR	MC14/764
	129F7573	Strip, angle joint, No. 4 tank	2	L72	MR	MC14/765
	130F7573	Strip, angle joint, No. 4 tank	2	L72	MR	MC14/766
	131F7573	Strip, angle joint, No. 6 tank	1	L72	MR	MC14/767
	132F7573	Strip, angle joint, No. 6 tank	1	L72	MR	MC14/768
	19F8675	Strip, angle joint, No. 6 tank	1	L72	MR	MC14/769
	20F8675	Strip, angle joint, No. 6 tank	1	L72	MR	MC14/770
		RIB, TANK, INNER, 460.436, PORT & STARBOARD (1 & 2F11740) (Mod. 1106) S.O.O.	—	—		MC14/771
		Spares for:—				
	13F11740	Angle, tank, forward, No. 3 tank, port	1	L73	MR	MC14/772
	14F11740	Angle, tank, forward, No. 3 tank, starboard	1	L73	MR	MC14/773
	15F11740	Angle, tank, aft, No. 3 tank, port	1	L73	MR	MC14/774
	16F11740	Angle, tank, aft, No. 3 tank, starboard	1	L73	MR	MC14/775
	17F11740	Angle, tank, forward, No. 4 tank, port	1	L73	MR	MC14/776
	18F11740	Angle, tank, forward, No. 4 tank, starboard	1	L73	MR	MC14/777
	19F11740	Angle, tank, aft, No. 4 tank, port	1	L73	MR	MC14/778
	20F11740	Angle, tank, aft, No. 4 tank, starboard	1	L73	MR	MC14/779
	21F11740	Angle, tank, forward, No. 6 tank, port	1	L73	MR	MC14/780
	22F11740	Angle, tank, forward, No. 6 tank, starboard	1	L73	MR	MC14/781
	23F11740	Angle, tank, aft, No. 6 tank, port	1	L73	MR	MC14/782
	24F11740	Angle, tank, aft, No. 6 tank, starboard	1	L73	MR/C	MC14/783
22147	24F11740	Angle, joint, top port, No. 3 tank	1	L73	MR	MC14/784
	128F11740	Angle, joint, top starboard, No. 3 tank	1	L73	MR	MC14/785
	129F11740	Angle, joint, bottom port, No. 3 tank	1	L73	MR	MC14/786
	130F11740	Angle, joint, bottom starboard, No. 3 tank	1	L73	MR	MC14/787
	131F11740	Angle, joint, top port, No. 4 tank	1	L73	MR	MC14/788
	132F11740	Angle, joint, top starboard, No. 4 tank	1	L73	MR	MC14/789
	133F11740	Angle, joint, bottom port, No. 4 tank	1	L73	MR	MC14/790
	134F11740	Angle, joint, bottom starboard, No. 4 tank	1	L73	MR	MC14/791
	135F11740	Angle, joint, top port, No. 6 tank	1	L73	MR	MC14/792

Ref. No.	Part No.	Description (1 2 3 4)	No. off	Matl. Spec.	Cl. of St. M.R.	Plate and Illust'n No.
		RIB, TANK, INNER, 460.436, PORT, AND STARBOARD (1 & 2F11740) (Mod. 1106) S.O.O. (Cont'd)				
	136F11740	Angle, joint, top starboard, No. 6 tank	1	L73	MR	MC14/793
	137F11740	Angle, joint, bottom port, No. 6 tank	1	L73	MR	MC14/794
	138F11740	Angle, joint, bottom starboard, No. 6 tank .	1	L73	MR	MC14/795
	3F11740	Boom, top, port	1	L65	MR	
	4F11740	Boom, top, starboard	1	L65	MR	
	5F11740	Boom, bottom, port	1	L65	MR	
	6F11740	Boom, bottom, starboard	1	L65	MR	
	10F8689	Housing, tie rod, top port	1	L65	MR	
	9F8689	Housing, tie rod, top starboard	1	L65	MR	
	11F8689	Housing, tie rod, bottom port	1	L65	MR	
	12F8689	Housing, tie rod, bottom starboard	1	L65	MR	
		Attachments—Housing, Part Nos. 9, 10, 11 & 12F8689				
28D/9133011	A25/2C	Bolt, 2 BA	2	—	C	
28D/9133012	A25/3C	Bolt, 2 BA	2	—	C	
28M/1278180	AGS2001/C/1	Nut, stiff, 2 BA	4	—	C	
28W/9419402	SP13/C	Washer, 2 BA	4	—	C	
		RIB, TANK, OUTER, 492.186, PORT AND STARBOARD (1 & 2F9978)	—	—		MC11/796
		Spares for:—				
	6F7575	Angle, tank, bottom port, top starboard, ... No. 5 tank	1	L72	MR	
	7F7575	Angle, tank, top port, bottom starboard, ... No. 5 tank	1	L72	MR	
	5F8677	Angle, tank, top port, bottom starboard, ... No. 7 tank	1	L72	MR	
	6F8677	Angle, tank, bottom, port, top starboard, .. No. 7 tank	1	L72	MR	
	3F9978	Boom, top, port	1	L72	MR	
	5F9978	Boom, top, starboard	1	L72	MR	
	4F9978	Boom, bottom, port	1	L72	MR	
	6F9978	Boom, bottom, starboard	1	L72	MR	
	17F8689	Housing, tie rod, top port, No. 5 tank	1	L65	MR	
	18F8689	Housing, tie rod, top starboard, No. 5 tank	1	L65	MR	
	20F8689	Housing, tie rod, bottom port, No. 5 tank ..	1	L65	MR	
	19F8689	Housing, tie rod, bottom starboard No. 5 .. tank	1	L65	MR	
	14F8689	Housing, tie rod, top port, No. 7 tank	1	L65	MR	
	13F8689	Housing, tie rod, top starboard, No. 7 ..... tank	1	L65	MR	

MAINPLANES

INNER MAINPLANES

Ref. No.	Part No.	Description (1 2 3 4)	No. off	Matl. Spec.	Cl. of St. M.R.	Plate and Illust'n No.
		RIB, TANK, OUTER, 492.186, PORT AND STARBOARD (1 & 2F9978) (Cont'd)				
	15F8689	Housing, tie rod, bottom port, No. 6 tank ..	1	L65	MR	
	16F8689	Housing, tie rod, bottom starboard No. 6 .. tank	1	L65	MR	
		Attachments—Housing, Part Nos. 13, 14, 15, 16, 17, 18, 19 & 20F8689				
28D/9133011	A25/2C	Bolt, 2 BA	2	—	C	
28D/9133012	A25/3C	Bolt, 2 BA	2	—	C	
28M/1278190	AGS2001/C/1	Nut, stiff, 2 BA	4	—	C	
28W/9419402	SP13/C	Washer, 2 BA	4	—	C	
	76F7575	Strip, angle joint, No. 5 tank	2	L72	MR	
	77F7575	Strip, angle joint, No. 5 tank	2	L72	MR	
	78F7575	Strip, angle joint, No. 7 tank	1	L72	MR	
	79F7575	Strip, angle joint, No. 7 tank	1	L72	MR	
	51F8677	Strip, angle joint, No. 7 tank	1	L72	MR	
	52F8677	Strip, angle joint, No. 7 tank	1	L72	MR	
		RIB, TANK, OUTER, 506.186, PORT ..... AND STARBOARD (1 & 2F9979)				MC11/797
		Spares for:—				
	6F7576	Angle, tank, top port, bottom starboard, ... No. 5 tank	1	L72	MR	
	7F7576	Angle, tank, bottom port, top starboard, ... No. 5 tank	1	L72	MR	
	5F8678	Angle, tank, top port, bottom starboard, ... No. 7 tank	1	L72	MR	
	6F8678	Angle, tank, bottom port, top starboard, ... No. 7 tank	1	L72	MR	
	3F9979	Boom, top, port	1	L72	MR	
	5F9979	Boom, top, starboard	1	L72	MR	
	4F9979	Boom, bottom, port	1	L72	MR	
	6F9979	Boom, bottom, starboard	1	L72	MR	
	17F8689	Housing, tie rod, top port, No. 5 tank	1	L65	MR	
	18F8689	Housing, tie rod, top starboard, No. 5 ..... tank	1	L65	MR	
	20F8689	Housing, tie rod, bottom port, No. 5 tank ..	1	L65	MR	
	19F8689	Housing, tie rod, bottom starboard No. 5 .. tank	1	L65	MR	
	14F8689	Housing, tie rod, top port, No. 7 tank	1	L65	MR	
	13F8689	Housing, tie rod, top starboard, No. 7 ..... tank	1	L65	MR	
	15F8689	Housing, tie rod, bottom port, No. 7 tank ..	1	L65	MR	
	16F8689	Housing, tie rod, bottom starboard No. 7 .. tank	1	L65	MR	

Ref. No.	Part No.	Description 1 2 3 4	No. off	Matl. Spec.	Cl. of St. M.R.	Plate and Illust'n No.
		RIB, TANK, OUTER, 506.186, PORT & STARBOARD (1 & 2F9979) (Cont'd)				
		Attachments—Housing, Part Nos. 13, 14, 15, 16, 17, 18, 19 & 20F8689				
28D/9133011	A25/2C	Bolt, 2 BA	2	—	C	
28D/9133012	A25/3C	Bolt, 2 BA	2	—	C	
28M/1278190	AGS2001/C/1	Nut, stiff, 2 BA	4	—	C	
28W/9419402	SP13/C	Washer, 2 BA	4	—	C	
	69F7576	Strip, angle joint, No. 5 tank	2	L72	MR	
	70F7576	Strip, angle joint, No. 5 tank	2	L72	MR	
	71F7576	Strip, angle joint, No. 7 tank	1	L72	MR	
	72F7576	Strip, angle joint, No. 7 tank	1	L72	MR	
	9F8678	Strip, angle joint, No. 7 tank	1	L72	MR	
	10F8678	Strip, angle joint, No. 7 tank	1	L72	MR	
		RIB, TANK, OUTER, 520.186, PORT & STARBOARD (1 & 2F9980)				MC11/798
		Spares for:—				
	6F7577	Angle, tank, top port, bottom starboard, No. 5 tank	1	L72	MR	
	7F7577	Angle, tank, bottom port, top starboard, No. 5 tank	1	L72	MR	
	5F8679	Angle, tank, top port, bottom starboard, No. 7 tank	1	L72	MR	
	6F8679	Angle, tank bottom port, top starboard, No. 7 tank	1	L72	MR	
	3F9980	Boom, top, port	1	L72	MR	
	5F9980	Boom, top, starboard	1	L72	MR	
	4F9980	Boom, bottom, port	1	L72	MR	
	6F9980	Boom, bottom, starboard	1	L72	MR	
	18F8689	Housing, tie rod, top port, No. 5 tank	1	L65	MR	
	17F8689	Housing, tie rod, top starboard, No. 5 tank	1	L65	MR	
	19F8689	Housing, tie rod, bottom port, No. 5 tank	1	L65	MR	
	20F8689	Housing, tie rod, bottom starboard, No. 5 tank	1	L75	MR	
	2F8689	Housing, tie rod, top port, No. 7 tank	1	L65	MR	
	1F8689	Housing, tie rod, top starboard, No. 7 tank	1	L65	MR	
1510393	3F8689	Housing, tie rod, bottom port, No. 7 tank	1	L65	MR	
	4F8689	Housing, tie rod, bottom starboard, No. 7 tank	1	L65	MR	
		Attachments—Housing, Part Nos. 1, 2, 3, 4, 17, 18, 19 & 20F8689				
28D/9133011	A25/2C	Bolt, 2 BA	2	—	C	
28D/9133012	A25/3C	Bolt, 2 BA	2	—	C	
28M/1278190	AGS2001/C/1	Nut, stiff, 2 BA	4	—	C	
28W/9419402	SP13/C	Washer, 2 BA	4	—	C	
	71F7577	Strip, angle joint, No. 5 tank	2	L72	MR	
	72F7577	Strip, angle joint, No. 5 tank	2	L72	MR	

MAINPLANES

INNER MAINPLANES

Ref. No.	Part No.	Description (1 2 3 4)	No. off	Matl. Spec.	Cl. of St. / M.R.	Plate and Illust'n No.
		RIB, TANK, OUTER, 520.186, PORT & STARBOARD (1 & 2F9980) (Cont'd)				
	73F7577	Strip, angle joint, No. 7 tank	1	L72	MR	
	74F7577	Strip, angle joint, No. 7 tank	1	L72	MR	
	33F8679	Strip, angle joint, No. 7 tank	1	L72	MR	
	34F8679	Strip, angle joint, No. 7 tank	1	L72	MR	
		RIB, TANK, OUTER, 534.186, PORT & STARBOARD (1 & 2F9981)	–	–		MC11/799
		Spares for:–				
	6F7578	Angle, tank, top port, bottom starboard, No. 5 tank	1	L72	MR	
	7F7578	Angle, tank, bottom port, top starboard, No. 5 tank	1	L72	MR	
	5F8680	Angle, tank, top port, bottom starboard, No. 7 tank	1	L72	MR	
	6F8680	Angle, tank, bottom port, top starboard No. 7 tank	1	L72	MR	
	3F9981	Boom, top, port	1	L72	MR	
	5F9981	Boom, top, starboard	1	L72	MR	
	4F9981	Boom, bottom, port	1	L72	MR	
	6F9981	Boom, bottom, starboard	1	L72	MR	
	5F8689	Housing, tie rod, top port, No. 5 tank	1	L65	MR	
	6F8689	Housing, tie rod, top starboard, No. 5 tank	1	L65	MR	
	8F8689	Housing, tie rod, bottom port, No. 5 tank	1	L65	MR	
	7F8689	Housing, tie rod, bottom starboard, No. 5 tank	1	L65	MR	
	14F8689	Housing, tie rod, top port, No. 7 tank	1	L65	MR	
	13F8689	Housing, tie rod, top starboard, No. 7 tank	1	L65	MR	
	15F8689	Housing, tie rod, bottom port, No. 7 tank	1	L65	MR	
	16F8689	Housing, tie rod, bottom starboard, No. 7 tank	1	L65	MR	
		Attachments–Housing, Part Nos. 5, 6, 7, 8, 13, 14, 15 & 16F8689				
28D/9133011	A25/2C	Bolt, 2 BA	2	–	C	
28D/9133012	A25/3C	Bolt, 2 BA	2	–	C	
28M/1278190	AGS2001/C/1	Nut, stiff, 2 BA	4	–	C	
28W/9419402	SP13/C	Washer, 2 BA	4	–	C	
	71F7578	Strip, angle joint, No. 5 tank	2	L72	MR	
	72F7578	Strip, angle joint, No. 5 tank	2	L72	MR	
	73F7578	Strip, angle joint, No. 7 tank	1	L72	MR	
	74F7578	Strip, angle joint, No. 7 tank	1	L72	MR	
	9F8680	Strip, angle joint, No. 7 tank	1	L72	MR	
	10F8680	Strip, angle joint, No. 7 tank	1	L72	MR	

Ref. No.	Part No.	Description 1 2 3 4	No. off	Matl. Spec.	Cl. of St. M.R.	Plate and Illust'n No.
		MAINPLANE, INNER PORTION, PORT AND STARBOARD, GROUP (21, 22, 157 & 158F9701) (Mod. 1106 & 2129) (Cont'd)				
		RIB, TANK, OUTER, 548.186, PORT AND STARBOARD (1 & 2F9982)				MC11/800
		Spares for:—				
	GF7579	Angle, tank, bottom port, top starboard, No. 5 tank	1	L72	MR	
	7F7579	Angle, tank, top port, bottom starboard, No. 5 tank	1	L72	MR	
	5F8681	Angle, tank, top port, bottom starboard, No. 7 tank	1	L72	MR	
	6F8681	Angle, tank, bottom port, top starboard, No. 7 tank	1	L72	MR	
	3F9982	Boom, top, port	1	L72	MR	
	5F9982	Boom, top, starboard	1	L72	MR	
	4F9982	Boom, bottom, port	1	L72	MR	
	6F9982	Boom, bottom, starboard	1	L72	MR	
	5F8689	Housing, tie rod, top port, No. 5 tank	1	L65	MR	
	6F8689	Housing, tie rod, top starboard, No. 5 tank	1	L65	MR	
	8F8689	Housing, tie rod, bottom port, No. 5 tank	1	L65	MR	
	7F8689	Housing, tie rod, bottom starboard, No. 5 tank	1	L65	MR	
	2F8689	Housing, tie rod, top port, No. 7 tank	1	L65	MR	
	1F8689	Housing, tie rod, top starboard, No. 7 tank	1	L65	MR	
1510393	3F8689	Housing, tie rod, bottom port, No. 7 tank	1	L65	MR	
	4F8689	Housing, tie rod, bottom starboard, No. 7 tank	1	L75	MR	
		Attachments- Housing, Part Nos. 1, 2, 3, 4, 5, 6, 7 & 8F8689				
28D/9133011	A25/2C	Bolt, 2 BA	2	—	C	
28D/9133012	A25/3C	Bolt, 2 BA	2	—	C	
28M/1278190	AGS2001/C/1	Nut, stiff, 2 BA	4	—	C	
28W/9419402	SP13/C	Washer, 2 BA	4	—	C	
	70F7579	Strip, angle joint, No. 5 tank	2	L72	MR	
	71F7579	Strip, angle joint, No. 5 tank	2	L72	MR	
	72F7579	Strip, angle joint, No. 7 tank	1	L72	MR	
	73F7579	Strip, angle joint, No. 7 tank	1	L72	MR	
	36F8681	Strip, angle joint, No. 7 tank	1	L72	MR	
	37F8681	Strip, angle joint, No. 7 tank	1	L72	MR	
		RIB, TANK, OUTER, 562.186, PORT AND STARBOARD (21 & 22F9983) (Mod. 894)				MC11/801
		Spares for:—				
	6F7580	Angle, tank, bottom port, top starboard, No. 5 tank	1	L72	MR	
	7F7580	Angle, tank, top port, bottom starboard, No. 5 tank	1	L72	MR	

MAINPLANES

INNER MAINPLANES

Ref. No.	Part No.	Description (1 2 3 4)	No. off	Matl. Spec.	Cl. of St. / M.R.	Plate and Illust'n No.
		RIB, TANK, OUTER, 562.186, PORT AND STARBOARD (21 & 22F9983) (Mod. 894) (Cont'd)				
	5F8682	Angle, tank, top port, bottom starboard, . . . No. 7 tank	1	L72	MR	
	6F8682	Angle, tank, bottom port, top starboard, . . . No. 7 tank	1	L72	MR	
	3F9983	Boom, top, port	1	L72	MR	
	5F9983	Boom, top, starboard	1	L72	MR	
	4F9983	Boom, bottom, port	1	L72	MR	
	6F9983	Boom, bottom, starboard	1	L72	MR	
	18F8689	Housing, tie rod, top port, No. 5 tank	1	L65	MR	
	17F8689	Housing, tie rod, top starboard, No. 5 . . . . . tank	1	L65	MR	
	19F8689	Housing, tie rod, bottom port, No. 5 tank . .	1	L65	MR	
	20F8689	Housing, tie rod, bottom stb'd. No. 5 . . . . . tank	1	L65	MR	
	14F8689	Housing, tie rod, top port, No. 7 tank	1	L65	MR	
	13F8689	Housing tie rod, top starboard, No. 7 . . . . . tank	1	L65	MR	
	15F8689	Housing, tie rod, bottom port, No. 7 tank . .	1	L65	MR	
	16F8689	Housing, tie rod, bottom, stb'd. No. 7 . . . . . tank	1	L65	MR	
		Attachments—Housing, Part Nos. 13, 14, 15, 16, 17, 18, 19 & 20F8689				
28D/9133011	A25/2C	Bolt, 2 BA	2	—	C	
28D/9133012	A25/3C	Bolt, 2 BA	2	—	C	
28M/1278190	AGS2001/C/1	Nut, stiff, 2 BA	4	—	C	
28W/9419402	SP13/C	Washer, 2 BA	4	—	C	
	67F7580	Strip, angle joint, No. 5 tank	2	L72	MR	
	68F7580	Strip, angle joint, No. 5 tank	2	L72	MR	
	69F7580	Strip, angle joint, No. 7 tank	1	L72	MR	
	70F7580	Strip, angle joint, No. 7 tank	1	L72	MR	
	29F8682	Strip, angle joint, No. 7 tank	1	L72	MR	
	30F8682	Strip, angle joint, No. 7 tank	1	L72	MR	
		RIB, TANK, OUTER, 576.186, PORT . . . . . AND STARBOARD (41 & 42F9984) (Mod. 894)				MC11/802
		Spares for:—				
	6F7581	Angle, tank, bottom port, top starboard, . . . No. 5 tank	1	L72	MR	
	7F7581	Angle, tank, top port, bottom starboard, . . . No. 5 tank	1	L72	MR	
	5F8683	Angle, tank, top port, bottom starboard, . . . No. 7 tank	1	L72	MR	
	6F8683	Angle, tank, bottom port, top starboard, . . . No. 7 tank	1	L72	MR	
	38F9984	Boom, top, port	1	L72	MR	
	39F9984	Boom, top, starboard	1	L72	MR	

Ref. No.	Part No.	Description (1 2 3 4)	No. off	Matl. Spec.	Cl. of St. M.R.	Plate and Illust'n No.
		RIB, TANK, OUTER, 578.186, PORT & STARBOARD (41 & 42F9984) (Mod. 894) (Cont'd)				
	31F9984	Boom, bottom, port	1	L72	MR	
	32F9984	Boom, bottom, starboard	1	L72	MR	
	18F8689	Housing, tie rod, top port, No. 5 tank	1	L65	MR	
	17F8689	Housing, tie rod, top starboard, No. 5 tank	1	L65	MR	
	19F8689	Housing, tie rod, bottom port, No. 5 tank	1	L65	MR	
	20F8389	Housing, tie rod, bottom starboard, No. 5 tank	1	L65	MR	
	2F8689	Housing, tie rod, top port, No. 7 tank	1	L65	MR	
	1F8689	Housing, tie rod, top starboard, No. 7 tank	1	L65	MR	
1510393	3F8689	Housing, tie rod bottom port, No. 7 tank	1	L65	MR	
	4F8689	Housing, tie rod, bottom starboard, No. 7 tank	1	L65	MR	
		Attachments—Housing, Part Nos. 1, 2, 3, 4, 17, 18, 19 & 20F8689				
28D/9133011	A25/2C	Bolt, 2 BA	2	—	C	
28D/9133012	A25/3C	Bolt, 2 BA	2	—	C	
28M/1278190	AGS2001/C/1	Nut, stiff, 2 BA	4	—	C	
28W/9419402	SP13/C	Washer, 2 BA	4	—		
	69F7581	Strip, angle joint, No. 5 tank	2	L77	MR	
	70F7581	Strip, angle joint, No. 5 tank	2	L72	MR	
	71F7581	Strip, angle joint, No. 7 tank	1	L72	MR	
	72F7581	Strip, angle joint, No. 7 tank	1	L72	MR	
	48F8683	Strip, angle joint, No. 7 tank	1	L72	MR	
	49F8683	Strip, angle joint, No. 7 tank	1	L72	MR	
		RIB, TANK, OUTER, 538.311, PORT & STARBOARD (38 & 39F9985) (Mod. 894)				MC11/803
		Spares for:—				
	6F7582	Angle, tank, bottom port, top starboard, No. 5 tank	1	L72	MR	
	7F7582	Angle, tank, top port, bottom starboard, No. 5 tank	1	L72	MR	
	5F8684	Angle, tank, top port, bottom starboard, No. 7 tank	1	L72	MR	
	6F8684	Angle, tank, bottom port, top starboard, No. 7 tank	1	L72	MR	
	33F9985	Angle, boom joint	1	L73	MR	
	36F9985	Boom, top port	1	L72	MR	
	37F9985	Boom, top, starboard	1	L72	MR	
	17F9985	Boom, bottom, forward, port	1	L73	MR	
	18F9985	Boom, bottom, forward, starboard	1	L73	MR	
	21F9985	Boom, bottom, aft, port	1	L73	MR	
	22F9985	Boom, bottom, aft, starboard	1	L73	MR	

MAINPLANES

INNER MAINPLANES

Ref. No.	Part No.	Description 1 2 3 4	No. off	Matl. Spec.	Cl. of St. / M.R.	Plate and Illust'n No.
		RIB, TANK, OUTER, 588.311, PORT & STARBOARD (38 & 39F9985) (Mod. 894) (Cont'd)				
	17F8689	Housing, tie rod, top port, No. 5 tank	1	L65	MR	
	18F8689	Housing, tie rod, top starboard, No. 5 tank	1	L65	MR	
	20F8689	Housing, tie rod, bottom port, No. 5 tank ..	1	L65	MR	
	19F8689	Housing, tie rod, bottom, starboard, No. 5 tank	1	L65	MR	
	10F8689	Housing, tie rod, top port, No. 7 tank	1	L65	MR	
	9F8689	Housing, tie rod, top starboard, No. 7 tank	1	L65	MR	
	11F8689	Housing, tie rod, bottom port, No. 7 tank ..	1	L65	MR	
	12F8689	Housing, tie rod, bottom starboard, No. 7 tank	1	L65	MR	
		Attachments–Housing, Part Nos. 9, 10, 11, 12, 17, 18, 19 & 20F8689				
28D/9133011	A25/2C	Bolt, 2 BA	2	–	C	
28D/9133012	A25/3C	Bolt, 2 BA	2	–	C	
28M/1278190	AGS2001/C/1	Nut, stiff, 2 BA	4	–	C	
28W/9419402	SP13/C	Washer, 2 BA	4	–	C	
	72F7582	Strip, angle joint, No. 5 tank	2	L72	MR	
	73F7582	Strip, angle joint, No. 5 tank	2	L72	MR	
	74F7582	Strip, angle joint, No. 7 tank	1	L72	MR	
	75F7582	Strip, angle joint, No. 7 tank	1	L72	MR	
	35F8684	Strip, angle joint, No. 7 tank	1	L72	MR	
	36F8684	Strip, angle joint, No. 7 tank	1	L72	MR	
		RIB, TANK, OUTER, 600.436, PORT & STARBOARD (65 & 66F9986) (Mod. 894)				MC11/804
		Spares for:–				
	6F7583	Angle, tank, bottom port, top starboard, No. 5 tank ...	1	L72	MR	
	7F7583	Angle, tank, top port, bottom starboard, No. 5 tank ...	1	L72	MR	
	5F8685	Angle, tank, top port, bottom starboard, No. 7 tank ...	1	L72	MR	
	6F8685	Angle, tank, bottom port, top starboard ...	1	L72	MR	
	57F9986	Angle, boom joint, port	1	L72	MR	
	58F9986	Angle, boom joint, starboard	1	L72	MR	
	63F9986	Boom, top, port	1	L72	MR	
	64F9986	Boom, top, starboard	1	L72	MR	
	14F9986	Boom, bottom, forward, port	1	L73	MR	
	15F9986	Boom, bottom, forward, starboard	1	L73	MR	
	18F9986	Boom, bottom, aft, port	1	L73	MR	
	19F9986	Boom, bottom, aft, starboard	1	L73	MR	
	105F7583	Strip, angle joint, No. 5 tank	2	L72		

Ref. No.	Part No.	Description 1 2 3 4	No. off	Matl. Spec.	Cl. of St. M.R.	Plate and Illust'n No.
		RIB, TANK, OUTER, 600-436, PORT AND STARBOARD (65 & 66F9986) (Mod. 894) (Cont'd)				
	106F7583	Strip, angle joint, No. 5 tank	2	L72	MR	
	107F7583	Strip, angle joint, No. 7 tank	1	L72	MR	
	108F7583	Strip, angle joint, No. 7 tank	1	L72	MR	
	57F8685	Strip, angle joint, No 7 tank	1	L72	MR	
	58F8685	Strip, angle joint, No 7 tank	1	L72	MR	
		RODS, TIE, FUEL TANKS, Nos. 5, 6 & 7, PORT AND STARBOARD (1 & 2F8690)				MC11/805
		Spares for:-				
	4SS3847	Bolt, special, c'sk. h'd.	69	–	MR	MC11/806
	5SS3847	Bolt, special, c'sk. h'd	12	–	MR	
11698	30F8690	Ring, locking	27	L.40	MR/C	MC11/807
	2F8821	ROD, TIE, "A" No. 5 TANK, GROUP	1	–	MR	
	3F8821	ROD, TIE, "B" No. 5 TANK, GROUP	1	–	MR	
	4F8821	ROD, TIE, "C" No. 5 TANK, GROUP	1	–	MR	
	5F8821	ROD, TIE, "D" No. 5 TANK, GROUP	1	–	MR	
	6F8821	ROD, TIE, "E" No. 5 TANK, GROUP	1	–	MR	
	7F8821	ROD, TIE, "F" No. 5 TANK, GROUP	1	–	MR	
	8F8821	ROD, TIE, "G" No. 5 TANK, GROUP	1	–	MR	
	9F8821	ROD, TIE, "H" No. 5 TANK, GROUP	1	–	MR	
	10F8821	ROD, TIE, "J" No. 5 TANK, GROUP	1	–	MR	
	11F8821	ROD, TIE, "A" No. 6 TANK, GROUP	1	–	MR	MC11/808
	12F8821	ROD, TIE, "B" No. 6 TANK, GROUP	1	–	MR	
	13F8821	ROD, TIE, "C" No. 6 TANK, GROUP	1	–	MR	
	14F8821	ROD, TIE, "D" No. 6 TANK, GROUP	1		MR	
	15F8821	ROD, TIE, "E" No. 6 TANK, GROUP	1		MR	
	16F8821	ROD, TIE, "F" No. 6 TANK, GROUP	1		MR	
	17F8821	ROD, TIE, "G" No. 6 TANK, GROUP	1	–	MR	
	18F8821	ROD, TIE, "H" No. 6 TANK, GROUP	1	–	MR	
	19F8821	ROD, TIE, "J" No. 6 TANK, GROUP	1	–	MR	
	20F8821	ROD, TIE, "A" No. 7 TANK, GROUP	1	–	MR	
	21F8821	ROD, TIE, "B" No. 7 TANK, GROUP	1	–	MR	
	22F8821	ROD, TIE, "C" No. 7 TANK, GROUP	1	–	MR	
	23F8821	ROD, TIE, "D" No. 7 TANK, GROUP	1	–	MR	
	24F8821	ROD, TIE, "E" No. 7 TANK, GROUP	1	–	MR	
	25F8821	ROD, TIE, "F" No. 7 TANK, GROUP	1	–	MR	
	26F8821	ROD, TIE, "G" No. 7 TANK, GROUP	1	–	MR	
1510391	27F8821	ROD, TIE, "H" No 7 TANK, GROUP	1	–	MR	
	29F8821	ROD, TIE, "J" No. 7 TANK, GROUP	1	–	MR	
	31F8690	Washer, sealing, .7" o/d x 1/2" i/d x 1/8"	27	Felt	MR	MC11/809
		SKIN, BOTTOM, BETWEEN FRONT AND REAR SPAR, PORT AND STB'D. (1 & 2F9704) (Pre Mod. 1106)				MC15/810
		SKIN, BOTTOM, BETWEEN FRONT AND REAR SPAR, PORT AND STB'D. (691 & 692F9704) (Mod. 1106)				
		Spares for:-				
	155F8487	Bracket, stringer, port	2	–		
	156F8487	Bracket, stringer, starboard	2	–		

Ref. No.	Part No.	Description 1 2 3 4	No. off	Matl. Spec.	Cl. of St. M.R.	Plate and Illust'n No.
		SKIN, BOTTOM, BETWEEN FRONT AND REAR SPARS, PORT AND STB'D (1 & 2F9704 or 691 & 692F9704) (Mod. & Pre Mod. 1106) (Cont'd)				
	157F8487	Bracket, stringer, port	1	–		
	158F8487	Bracket, stringer, starboard	1	–		
	159F8487	Bracket, stringer, port	1	–		
	160F8487	Bracket, stringer, starboard	1	–	MR	
	161F8487	Bracket, stringer, port	2	–		
	162F8487	Bracket, stringer, starboard	2	–	MR	
	163F8487	Bracket, stringer, port	5	–	MR	
	164F8487	Bracket, stringer, starboard	7	–		
	165F8487	Bracket, stringer, port	1	–		
	179F8487	Bracket, stringer, port	1	–		
	180F7488	Bracket, stringer, starboard	1	–		
	227F8487	Bracket, stringer, port	1	–	MR	
	228F8487	Bracket, stringer, starboard	1	–	MR	
	137F8632	Bracket, stringer	197	–	MR	
	146F8632	Bracket, stringer, port	36	–	MR	
	145F8632	Bracket, stringer, starboard	36	–	MR	
	156F8632	Bracket, stringer, port	1	–	MR	
	155F8632	Bracket, stringer, starboard	11	–	MR	
	168F8632	Bracket, stringer	27	–	MR	
	169F8632	Bracket, stringer	4	–	MR	
	183F8632	Bracket, stringer, port	3	–		
	184F8632	Bracket, stringer, starboard	4	–	MR	
	333F8632	Bracket, stringer	2	–	MR	
	334F8632	Bracket, stringer	2	–	MR	
	4F9181	Bracket, stringer, starboard	6	–	MR	
	5F9181	Bracket, stringer	24	–	MR	
	6F9181	Bracket, stringer	50	–	MR	
	7F9181	Bracket, stringer, port	61	–	MR	
	8F9181	Bracket, stringer, starboard	61	–	MR	
	3F9192	Bracket, stringer, port	4	–	MR	
	4F9192	Bracket, stringer, starboard	4	–	MR	
	6F9192	Bracket, stringer, starboard	1	–	MR	
	8F9192	Bracket, stringer, starboard	1	–	MR	
	927F9703	Bracket, stringer, port	151	–	MR	
	928F9703	Bracket, stringer, starboard	151	–	MR	
	979F9703	Bracket, stringer, port	6	–	MR	
	980F9703	Bracket, stringer, starboard	6	–	MR	
	311F9704	Bracket, stringer, port	1	–	MR	
	312F9704	Bracket, stringer, starboard	1	–	MR	
	315F9704	Bracket, stringer, port	1	–	MR	
	316F9704	Bracket, stringer, starboard	1	–	MR	
	536F9704	Bracket, stringer	1	–	MR	
	537F9704	Bracket, stringer	1	–	MR	
	575F9704	Bracket, stringer, port	13	–	MR	
	574F9704	Bracket, stringer, starboard	13	–	MR	
	577F9704	Bracket, stringer, port	5	–	MR	
	576F9704	Bracket, stringer, starboard	5	–	MR	

Ref. No.	Part No.	Description 1 2 3 4	No. off	Matl. Spec.	Cl. of St. M.R.	Plate and Illust'n No.
		SKIN, BOTTOM, BETWEEN FRONT & REAR SPARS, PORT AND STARBOARD (1 & 2F9704 or 691 & 692F9704) (Mod. & Pre-Mod. 1106) (Cont'd.)				
	588F9704	Bracket, stringer, port	1	—	MR	
	587F9704	Bracket, stringer, starboard	1	—	MR	
	590F9704	Bracket, stringer, port	3	—	MR	
	589F9704	Bracket, stringer, starboard	3	—	MR	
	611F9704	Bracket, stringer, port	3	—	MR	
	612F9704	Bracket, stringer, starboard	3	—	MR	
	613F9704	Bracket, stringer, port	4	—	MR	
	614F9704	Bracket, stringer, starboard	4	—	MR	
	615F9704	Bracket, stringer, port	3	—	MR	
	616F9704	Bracket, stringer, starboard	4	—	MR	
	617F9704	Bracket, stringer, port	3	—	MR	
	618F9704	Bracket, stringer, starboard	3	—	MR	
	619F9704	Bracket, stringer, port	4	—	MR	
	620F9704	Bracket, stringer, starboard	4	—	MR	
	621F9704	Bracket, stringer, port	3	—	MR	
	622F9704	Bracket, stringer, starboard	3	—	MR	
	623F9704	Bracket, stringer, port	2	—	MR	
	624F9704	Bracket, stringer, starboard	2	—	MR	
	855F9704	Bracket, stringer, port	1	—	MR	
	856F9704	Bracket, stringer, starboard	1	—	MR	
	857F9704	Bracket, stringer, port	1	—	MR	
	858F9704	Bracket, stringer, starboard	1	—	MR	
	7F11730	Bracket, stringer, port	23	—	MR	
	8F11730	Bracket, stringer, starboard	23	—	MR	
	23F11730	Bracket, stringer, port	1	—	MR	
	24F11730	Bracket, stringer, starboard	1	—	MR	
	19F11730	Bracket, stringer, port	1	—	MR	
	20F11730	Bracket, stringer, starboard	1	—	MR	
	40F11730	Bracket, stringer, port	1	—	MR	
	41F11730	Bracket, stringer, starboard	1	—	MR	
	42F11730	Bracket, stringer, port	8	—	MR	
	43F11730	Bracket, stringer, starboard	9	—	MR	
	44F11730	Bracket, stringer, port	2	—	MR	
	45F11730	Bracket, stringer, starboard	1	—	MR	
	46F11730	Bracket, stringer, port	1	—	MR	
	47F11730	Bracket, stringer, starboard	1	—	MR	
	48F11730	Bracket, stringer, port	1	—	MR	
	49F11730	Bracket, stringer, starboard	1	—	MR	
	50F11730	Bracket, stringer	7	—	MR	
	894F11657	Bracket, stringer, port	1	—	MR	
	895F11657	Bracket, stringer, starboard	1	—	MR	
	63F7508	Bracket, stringer, port	2	—	MR	
	64F7508	Bracket, stringer, starboard	2	—	MR	

Ref. No.	Part No.	Description (1 2 3 4)	No. off	Matl. Spec.	Cl. of St. / M.R.	Plate and Illust'n No.
		SKIN, BOTTOM, BETWEEN FRONT & REAR SPARS, PORT AND STARBOARD (1 & 2 F9704 or 691 & 692F9704) (Mod. & Pre-Mod. 1106) (Cont'd)				
	1F10093	PANEL, ACCESS, FOR VENT VALVES, .. PORT, GROUP	1	–		MC15/811
	2F10093	PANEL, ACCESS, FOR VENT VALVES, .. STARBOARD, GROUP	1	–		MC15/812
		Spares for:–				
	10F9263	Panel, access	1	L72		MC15/813
		Attachments–Access Panel, Part Nos. 10F9263				
28D/1214091	AS1242/2C	Bolt, c'sk. hd., 2 BA	12	–	C	
	1F10094	PANEL, ACCESS, TO ELECTRICAL ..... SERVICES, PORT, GROUP	1	–		MC15/814
	2F10094	PANEL, ACCESS, TO ELECTRICAL ..... SERVICES, STARBOARD, GROUP	1	–		MC15/815
		Spares for:–				
	10F9263	Panel, access	1	L72		MC15/816
		Attachments–Access Panel, Part No. 10F9263				
28D/1214091	AS1242/2C	Bolt, c'sk. hd., 2 BA	12	–	C	
10278	7F10622	PANEL, ACCESS, TO SUMP, No. 3 ..... TANK, PORT, GROUP (Mod. 1017)	1	–	C	MC15/817
10279	8F10622	PANEL, ACCESS, TO SUMP No. 3 ..... TANK, STARBOARD, GROUP (Mod. 1017)	1	–	C	MC15/818
		Spares for:–				
28FP/4062654	DZUS EF5/45A	Fastener	16	–	C	
	16F9207	Panel, access	1	L72	MR	MC15/819
10280	4F10623	PANEL, ACCESS, TO SUMP, No. 4 ..... TANK, PORT, GROUP (Mod. 1017)	1	–	MR	MC15/820
	5F10623	PANEL, ACCESS, TO SUMP No. 4 ..... TANK, STARBOARD, GROUP (Mod. 1017)	1	–	MR	MC15/821
		Spares for:–				
28FP/4062654	DZUS EF5/45A	Fastener	20	–	C	
13753	8F10623	PANEL, ACCESS, INHIBITOR, ... PORT, GROUP	1	–	C	MC15/822
12161	9F10623	PANEL, ACCESS, INHIBITOR, ... STARBOARD, GROUP	1	–		MC15/823
		Spares for:–				
28FP/4062364	DZUS F4/35	Fastener	2	–	C	
12160	7F10623	PLATE, REINFORCING, GROUP	1	–	C	MC15/824
12162	10F10623	Stiffener	1	–	C	MC15/825

Ref. No.	Part No.	Description (1 2 3 4)	No. off	Matl. Spec.	Cl. of St. / M.R.	Plate and Illust'n No.
		STRUCTURE, BOTTOM SURFACE, AFT OF REAR U/C BULKHEAD, PORT AND STARBOARD (1 & 50F10026) (Cont'd)				
	8F10026	**BEAM, CENTRE, AFT, STB'D., GROUP**	1	—	MR	MC16/886
	31F10026	**BEAM, CENTRE, FORWARD, STARBOARD, GROUP**	1	—	MR	MC16/887
	13F10026	**Bracket,** corner, bottom surface structure, aft, port	1	—	MR	MC16/888
	14F10026	**Bracket,** corner, bottom surface structure, aft, starboard	1	—	MR	MC16/889
		Attachments – Bracket, Part Nos. 13 & 14F10026				
	4SS4399	**Bolt,** $\frac{5}{16}$" BSF	1	—	MR	
	30F10026	**Washer,** special	1	—	MR	
28M/1202770	AGS2001/G/1	**Nut,** stiff, $\frac{5}{16}$" BSF	1	—	C	
	21F8741	**Bracket,** attachment, forward front beam, port	1	L72	MR	MC16/890
	22F8741	**Bracket,** attachment, forward front beam, starboard	1	L72	MR	MC16/891
9777	23F8741	**Bracket,** attachment, forward front beam, port	1	L72	MR/C	MC16/892
	24F8741	**Bracket,** attachment, forward front beam, starboard	1	L72	MR	MC16/893
	25F8741	**Bracket,** attachment, forward front beam, port	1	L72	MR	MC16/894
	26F8741	**Bracket,** attachment, forward front beam, starboard	1	L72	MR	MC16/895
	27F8741	**Bracket,** attachment, forward front beam, port	1	L72	MR	MC15/896
	28F8741	**Bracket,** attachment, forward front beam, starboard	1	L72	MR	MC16/897
	29F8741	**Bracket,** attachment, forward front beam, port	1	L72	MR	MC16/989
	30F8741	**Bracket,** attachment, forward front beam, starboard	1	L72	MR	MC16/899
	31F8741	**Bracket,** attachment, forward front beam, port	1	L72	MR	MC16/900
	32F8741	**Bracket,** attachment, forward front beam, starboard	1	L72	MR	MC16/901
	41F10026	**BRACKET, SUPPORT, AFT, FRONT BEAM, STARBOARD, GROUP**	1	—	MR	MC16/902
	24F10026	**BRACKET, SUPPORT, FORWARD, CENTRE BEAM, STARBOARD, GROUP**	1	—	MR	MC16/903
	89F10026	**Channel,** support, bottom surface structure, starboard	1	L72	MR	MC16/904
	90F10026	**Channel,** support, bottom surface structure, starboard	1	L72	MR	MC16/905
	5F8741	**Diaphragm,** front beam, port	3	L72	MR	MC16/906
	10F9610	**Diaphragm,** front beam, starboard ...	3	L72	MR	MC16/907
	9F8741	**Diaphragm,** centre beam, port ...	3	L72	MR	MC16/908
	32F10026	**Diaphragm,** centre beam, starboard ...	3	L72	MR	MC16/90

Ref. No.	Part No.	Description (1 2 3 4)	No. off	Matl. Spec.	Cl. of St. / M.R.	Plate and Illust'n No.
		STRUCTURE, BOTTOM SURFACE, AFT OF REAR U/C BULKHEAD, PORT & STARBOARD (1 & 50F10026) (Cont'd)				
1510409	35F12905	DOOR, ACCESS, TO ACCEPT "DECCA" 72 AERIAL, PORT, GROUP (Mod. 2256)	1	–	C	MC16/910
		Spares for:–				
	19F12905	Angle, support	1	–		MC16/910A
		Attachments–Angle Part No. 19F12905				
28D/9133011	A25/2C	Bolt, hex. hd., 2 BA	10	–	C	MC16/910B
28W/9419402	SP13/C	Washer, 2 BA	10	–	C	
	30F12905	DOOR, ACCESS, GROUP	1	–		
	36F12905	MOUNTING OF "DECCA" 72 AERIAL, GROUP	1	–		MC16/911
		Spares for:–				
26TA/1035	SS4910/05D	Bolt, for Aerial attachment	22	–	C	MC16/911A
	1F12943	Casting	1	–		MC16/911B
		Attachments–Casting Part No. 1F12943:–				
28D/1212805	AS1248/9C	Bolt, mush. hd., 2 BA	16	–	C	MC16/912
28M/1012015	AGS2001/C1/66	Nut, Stiff, 2 BA	16	–	C	
28W/9419475	SP15/C	Washer, 2 BA	16	–	C	
28W/9419476	SP15/G	Washer, 5/16"	16	–	C	
	34F12905	Packing	1	–		
	33F12905	PLATE, ANCHOR, GROUP	1	–		MC16/912A
		Spares for:–				
28N/1046381	SP121/E	Collar	1	–	C	
28P/9529222	SP113/E4-1/2	Pin, shear	1	–	C	
28P/9486478	SP90/C5	Pin, split	1	–	C	
	33aF12905	Plate	1	–		
		Attachments–Plate Part No. 33F12905				MC16/912B
28D/1013173	AS1242/10C	Bolt, csk. hd., 2 BA	2	–	C	
28M/1012015	AGS2001/C1/66	Nut, stiff, 2 BA	2	–	C	
28W/9419475	SP15/C	Washer, 2 BA	2	–	C	
	AS2811/5/065	Tube, distance	2	–		
	AS2811/5/072	Tube, distance	16	–		
7160	1F10365	PANEL, ACCESS, AUXILIARY AIRBORNE POWER PLANT, INBOARD STARBOARD, GROUP	1	–	B	MC17/913
		Spares for:–				
7161	11F10365	COVER, HAND HOLE, GROUP	1	–	C	MC17/914
28FP/4069999	TFR5/31K	Fastener, dzus	1	–	C	
28FP/1229780	TFR5/24K	Fastener, dzus	3	–	C	
28FP/1300170	TFR5/21K	Fastener, dzus	15	–	C	
28FP/1229781	TFR5/27K	Fastener, dzus	4	–	C	
28FP/4069928	TFR5/1G	Grommet	23	–	C	

Ref. No.	Part No.	Description (1 2 3 4)	No. off	Matl. Spec.	Cl. of St. / M.R.	Plate and Illust'n No.
		SKIN, BOTTOM, BETWEEN FRONT AND REAR SPARS, PORT AND STARBOARD (1 & 2F9704 or 691 & 692F9704) (Mod. & Pre-Mod. 1106) (Cont'd)				
	9F9874	PANEL, ACCESS, No. 5 TANK, PORT, GROUP (Mod. 1456)	1	–		MC15/826
	10F9874	PANEL, ACCESS, No. 5 TANK, STARBOARD, GROUP (Mod. 1456)	1	–		MC15/827
		Spares for:–				
12641	799F9704	Panel, access, port	1	L73	C	MC15/828
12642	800F9704	Panel, access, starboard	1	L73	C	MC15/829
		Attachments–Access Panel, Part Nos. 799 & 800F9704				
1433762	SS4698/2C	Bolt, mush. hd., 2 BA	18	–		
	9F9875	PANEL, ACCESS, No. 7 TANK, PORT, GROUP (Mod. 1456)	1	–		MC15/830
	8F9875	PANEL, ACCESS, No. 7 TANK STARBOARD, GROUP (Mod. 1456)	1	–		MC15/831
		Spares for:–				
12643	759F9704	Panel, access, port	1	L73	C	MC15/832
12644	760F9704	Panel, access, starboard	1	L73	C	MC15/833
		Attachments–Access Panel, Part Nos. 759 & 760F9704				
1433762	SS4698/2C	Bolt, mush. hd., 2 BA	20	–	C	
10284	7F10624	PANEL, ACCESS, FOR SUMP, No. 6 TANK, PORT, GROUP (Mod. 1017)	1	–		MC15/834
10285	8F10624	PANEL, ACCESS, FOR SUMP, No. 6 TANK, STARBOARD, GROUP (Mod. 1017)	1	–		MC15/835
		Spares for:–				
28FP/4062654	DZUS EF5/45A	Fastener	20	–	C	
	16F9207	Panel, access Z	1	L72	MR	MC15/836
13754	9F10624	Plate, reinforcing	1	–		MA15/837
	10F10624	Stiffener, port	1	–		MC15/838
1433036	11F10624	Stiffener, starboard	1	–		MC15/839
8574	1F11113	PANEL, ACCESS, No. 3 TANK, PORT, GROUP	1	–	B	MC15/840
		Spares for:–				
28FP/4062654	DZUS EF5/45A	Fastener	12	–	C	
8575	1F11106	PANEL, ACCESS, No. 3 TANK, STARBOARD, GROUP	1	–	B	MC15/841
		Spares for:–				
28FP/4062654	DZUS EF5/45A	Fastener	12	–	C	
8576	1F11105	PANEL, ACCESS, FOR EMERGENCY FUEL, LEVEL SWITCH, No. 4 TANK, PORT, GROUP	1	–	B	MC15/842
		Spares for:–				
28FP/4062654	DZUS EF5/45A	Fastener	14	–	C	

Ref. No.	Part No.	Description 1 2 3 4	No. off	Matl. Spec.	Cl. of St. M.R.	Plate and Illust'n No.
		SKIN, BOTTOM, BETWEEN FRONT AND REAR SPARS, PORT AND STARBOARD (1 & 2F9704 or 691 & 692F9704) (Mod. & Pre Mod. 1106) (Cont'd.)				
8577	1F11115	PANEL, ACCESS, FOR EMERGENCY FUEL LEVEL SWITCH, NO. 4 TANK STARBOARD, GROUP	1	—	B	MC15/843
		Spares for:—				
28FP/4062654	DZUS EF5/45A	Fastener	14	—	C	
12647	4F11110	PANEL, ACCESS, FOR EMERGENCY FUEL LEVEL SWITCH, No. 5 TANK PORT, GROUP	1	—	B	MC15/844
		Spares for:—				
28FP/4062654	DZUS EF5/45A	Fastener	9	—	C	
12648	3F11116	PANEL, ACCESS, FOR EMERGENCY FUEL LEVEL SWITCH, No. 5 TANK STARBOARD, GROUP	1	—	B	MC15/845
		Spares for:—				
28FP/4062654	DZUS EF5/45A	Fastener	9	—	C	
8580	1F11109	PANEL, ACCESS, FOR EMERGENCY FUEL LEVEL SWITCH, No. 7 TANK PORT, GROUP	1	—	B	MC15/846
		Spares for:—				
28FP/4062654	DZUS EF5/45A	Fastener	14	—		
8581	1F11108	PANEL, ACCESS, FOR EMERGENCY FUEL LEVEL SWITCH, No. 7 TANK STARBOARD, GROUP	1	—	B	MC15/847
		Spares for:—				
28FP/4062654	DZUS EF5/45A	Fastener	14	—	C	
8582	1F11114	PANEL, ACCESS, FOR EMERGENCY FUEL, LEVEL SWITCH, No. 6 TANK PORT, GROUP	1	—	B	MC15/848
		Spares for:—				
28FP/4062654	DZUS EF5/45A	Fastener	14	—	C	
8583	1F11107	PANEL, ACCESS, FOR EMERGENCY FUEL LEVEL SWITCH, No. 6 TANK STARBOARD, GROUP	1	—	B	MC15/849
		Spares for:—				
28FP/4062654	DZUS EF5/45A	Fastener	14	—	C	

Ref. No.	Part No.	Description (1 2 3 4)	No. off	Matl. Spec.	Cl. of St. M.R.	Plate and Illust'n No.
		SKIN, BOTTOM, BETWEEN FRONT & REAR SPARS, PORT AND STARBOARD (1 & 2F9704 or 691 & 692F9704) (Mod. & Pre-Mod. 1106) (Cont'd.)				
12640	5F9223	PANEL, ACCESS, TO PIPE CONNECTIONS (K) PORT, GROUP (Mod. 1456)	1	—	B	MC15/850
12639	4F9223	PANEL, ACCESS, TO PIPE CONNECTIONS (K) STARBOARD, GROUP (Mod. 1456)	1	—	B	MC15/851
		Spares for:—				
28FP/4062654	EF5/45A	Fastener, dzus	12	—	C	
	1F11797	PANEL, ACCESS, TO FUEL TANK No. 4, PORT, GROUP (Mod. 1302)	1	—	MR	MC15/852
	2F11797	PANEL, ACCESS, TO FUEL TANK No. 4, STARBOARD, GROUP (Mod. 1302)	1	—	MR	MC15/853
		Attachment—Access Panel Part Nos. 1 & 2F11797				
	SS4698/2C	Bolt, mush. hd., 2 BA	50	—		
12646	7F9990	PANEL, ACCESS, (L) OUTBOARD U/C RIB, BETWEEN STRINGERS 14 & 16, PORT, GROUP (Mod. 1456)	1	—	B	MC15/854
12645	6F9990	PANEL, ACCESS (L) OUTBOARD U/C RIB, BETWEEN STRINGERS 14 & 16, STARBOARD, GROUP (Mod. 1456)	1	—	B	MC15/855
		Spares for:—				
28FP/4062654	EF5/45A	Fastener, dzus	22	—	C	
11608	3F11793	PANEL, ACCESS, TO AMPLIFIERS PORT, GROUP (Mod. 1302)	1	—	B	MC15/856
11609	4F11793	PANEL, ACCESS, TO AMPLIFIERS, STARBOARD, GROUP (Mod. 1302)	1	—	B	MC15/857
		Spares for:—				
	8P3232	Bellows	1	S. Steel	MR	
	5P3232	Housing	1	—		
	7P3232	Washer	2	DTD762	MR	
		Attachments—Access Panel Part Nos. 3 & 4F11793				
1433762	SS4698/2C	Bolt, mush. hd., 2 BA	9	—	C	
	SS4698/3C	Bolt, mush. hd., 2 BA	18	—	MR	
10286	99F10883	PANEL, ACCESS, (P) HONEYCOMB TO FUEL PIPES, BETWEEN RIBS 576 & 600, PORT, GROUP (Mod. 1017)	1	—	B	MC15/858
10287	100F10883	PANEL, ACCESS, (P) HONEYCOMB TO FUEL PIPES, BETWEEN RIBS 576 & 600, STARBOARD, GROUP (Mod. 1017)	1	—	B	MC15/859
		Spares for:—				
	KING A/C C8352	Fastener, upper body	30	—	MR	MC15/860
13746	104F10883	MEMBER, REINFORCING, PORT, GROUP	1	—	C	MC15/861
13745	103F10883	Packing	1	—	C	MC15/862
13756	54F10882	Panel, access, port	1	—	C	MC15/863
13744	102F10883	PANEL, ACCESS, STARBOARD, GROUP	1	—	C	MC15/864
11370	101F10883	PLATE, REINFORCING, STARBOARD, GROUP	1	—	C	MC15/865

Ref. No.	Part No.	Description (1 2 3 4)	No. off	Matl. Spec.	Cl. of St. M.R.	Plate and Illust'n No.
		SKIN, BOTTOM, BETWEEN FRONT & REAR SPARS, PORT AND STARBOARD (1 & 2F9704 or 691 & 692F9704) (Mod. & Pre-Mod. 1106) (Cont'd.)				
8060	35F10161	PANEL, ACCESS, HONEYCOMB, TO FUEL PIPES, BETWEEN RIBS 576 & 600, PORT, GROUP	—	—	C	MC15/866
8061	36F10161	PANEL, ACCESS, HONEYCOMB, TO FUEL PIPES, BETWEEN RIBS 576 & 600, STARBOARD, GROUP	—	—	C	MC15/867
	1F10884	Panel, access (M) between ribs 562.186 & 576.186, port	1	L73	MR	MC15/868
	2F10884	Panel, access (M) between ribs 562.186 & 576.186, starboard	1	L73	MR	MC15/869
	1F11803	Panel, access, between ribs 408.186 & 436.186, port	1	L73		MC15/870
	2F11803	Panel, access, between ribs 408.186 & 436.186, starboard	1	L73		MC15/871
		Attachments—Access Panels Part Nos. 1 & 2F11803				
28D/1013284	AS1248/2C	Bolt, mush. hd., 2 BA	12	—	C	
	241F8632	Panel, inspection, between ribs 460.436 & 478.186	1	—		MC15/872
		Attachments—Inspection Panel Part No. 241F8632				
1164	11SS4140	Screw	6	—	C	MC15/873
1510536	1F10887	PANEL, KINK CONTROL BETWEEN RIBS 618.186 & 576.186, INBOARD FORWARD PORT, GROUP	1	—	B	
1510537	2F10887	PANEL, KINK CONTROL BETWEEN RIBS 618.186 & 576.186, INBOARD FORWARD STARBOARD, GROUP	1	—	B	
1510538	1F10888	PANEL, KINK CONTROL BETWEEN RIBS 618.186 & 576.186, INBOARD REAR PORT, GROUP	1	—	B	
1510539	2F10888	PANEL, KINK CONTROL BETWEEN RIBS 618.186 & 576.186, INBOARD REAR STARBOARD, GROUP	1	—	B	
20811	1F8635	WING, CAVITY VENT, PORT, GROUP	1	—	C	MC15/874
20812	9F8635	WING, CAVITY VENT, STARBOARD, GROUP	1	—	C	
		Consisting of:—				
	7F8635	HINGE AND SPRING, GROUP	1	—		
	2F8635	LOUVRE, GROUP	1	—		
	5F8635	Plate, cover	1	—		

Ref. No.	Part No.	Description 1 2 3 4	No. off	Matl. Spec.	Cl. of St. M.R.	Plate and Illust'n No.
		STRUCTURE, BOTTOM SURFACE, AFT OF REAR U/C BULKHEAD, PORT AND STARBOARD (1 & 50F10026) Spares for:—				
20781	36F10026	ANGLE, PANEL SUPPORT, AFT FRONT BEAM, STARBOARD, GROUP	1	—	MR/C	MC16/874
	10F8741	ANGLE, ATTACHMENT, CENTRE BEAM, PORT, GROUP	3	—	MR	MC16/875
	33F10026	ANGLE, ATTACHMENT, CENTRE BEAM, STARBOARD, GROUP	3	—	MR	MC16/876
	69F10026	ANGLE, ATTACHMENT, FRONT BEAM, PORT, GROUP	3	—	MR	MC16/877
	70F10026	ANGLE, ATTACHMENT, FRONT BEAM, STARBOARD, GROUP	3	—	MR	MC16/878
	56F10026	Angle, attachment, bottom surface structure, starboard	1	—	MR	MC16/879
	58F10026	Angle, attachment, bottom surface structure, starboard	1	—	MR	MC16/880
	52F10026	Angle, attachment, bottom surface structure, starboard	1	—	MR	MC16/881
	3F10026	BEAM, FRONT, PORT, GROUP	1	—	MR	MC16/882
	4F10026	BEAM, FRONT, STARBOARD, GROUP	1	—	MR	MC16/883
	7F10026	BEAM, CENTRE, FORWARD, PORT, GROUP	1	—	MR	MC16/884
	9F10026	BEAM, CENTRE, AFT, PORT, GROUP	1	—	MR	MC16/885

MAINPLANES

INNER MAINPLANES

Ref. No.	Part No.	Description 1 2 3 4	No. off	Matl. Spec.	Cl.of St. / M.R.	Plate and Illust'n No.

INNER MAINPLANES

Ref. No.	Part No.	Description (1 2 3 4)	No. off	Matl. Spec.	Cl. of St. M.R.	Plate and Illust'n No.
8353	30F10369	PANEL, ACCESS, C/W EQUIPMENT, AUXILIARY AIRBORNE POWER PLANT, OUTBOARD, STARBOARD, GROUP	1	—	B	MC17/915
		Spares for:—				
7163	7F9690	Bearing	1	DTD130A	C	MC17/916
7173	10F9690	Bearing	1	DTD130A	C	MC17/917
26FP/16329	5Z2164	CHAIN, PIP-PIN, GROUP	2	—	C	
7167	1Z9266	DUCT, ENGINE AIR, INTAKE, GROUP	1	—	C	MC17/918
		Spares for:—				
	2Z9266	Collar, flexible	1	—	MR	MC17/919
	1Z9639	Duct, T.R.U.	1	—		
	1Z9268	Duct, alternator and oil cooler	1	—		MC17/921
	1Z9269	Duct, air intakes	1	—		MC17/922
12936	32F10369	Packing	1	—	C	MC17/923
	90F10366	PANEL, ACCESS, OUTBOARD, GROUP	1	—		MC17/924
		Spares for:—				
26FP/16329	5Z2164	CHAIN, RETAINING, GROUP	1	—	C	MC17/925
28FP/4069917	TFR5/23K	Fastener, dzus	5	—	C	
28FP/4069918	TFR5/25K	Fastener, dzus	7	—	C	
28FP/4069919	TFR5/26K	Fastener, dzus	5	—	C	
28FP/4069928	TFR5/1G	Grommet	17	—	C	
	45F10366	LOUVRE, GROUP	1	—		MC17/926
	16F10366	PANEL, ACCESS, CARTRIDGE START, GROUP	1	—	MR	MC17/927
		Spares for:—				
28FP/4069915	TFR5/19K	Fastener, dzus	2	—	C	
28FP/4069919	TFR5/26K	Fastener, dzus	4	—	C	
28FP/4069928	TFR5/1G	Grommet	6	—	C	
1433135	100F10366	PIPE, STUD, GROUP	1	—	C	MC17/928
	56F10366	Seal	2	DTD552		MC17/929
	113F10366	Seal	2	DTD552	MR	MC17/930
28FP/9469709	A407	Pin, pip	2	—	C	
	31F10369	Ring, retaining	2	—	MR	
	38F10369	ROD, SUPPORT, GROUP	1	—	MR	NC17/932
	40F10369	ROD, SUPPORT, GROUP	1	—	MR	MC17/933
		Spares for:—				
	ROSE BROS.					
	RM.4	Bearing, rod-end	1	—		
	RML.4	Bearing, rod-end	1	—		
28M/1007403	A27/ET	Nut, thin, 1/4" BSF	1	—	C	
28M/4095923	A27/ETL	Nut, thin, 1/4" BSF	1	—	C	
	AS2809/4/040	Tube, distance	2	—		

Ref. No.	Part No.	Description 1 2 3 4	No. off	Matl. Spec.	Cl. of St. M.R.	Plate and Illust'n No.
		Attachments—Rod, Part Nos. 38 & 40F10369 (Cont'd.)				
28D/9133013	A25/5C	Bolt, 2 BA	1	—	C	
28D/7002428	A25/6C	Bolt, 2 BA	1	—	C	
28M/1012015	AGS2001/C1/66	Nut, stiff, 2 BA	2	—	C	
28W/9419402	SP13/C	Washer, 2 BA	2	—	C	
	50F10420	SCOOP, A.A.P.P., GROUP	1	—	MR	MC17/934
		Spares for:—				
	40F10420	HINGE, GROUP	1	—		MC17/935
	34F10369	Seal	1	DTD552	MR	MC17/936
	36F10369	Seal	1	DTD552	MR	MC17/937
	1F11789	PANEL, ACCESS, HONEYCOMB, AFT CENTRE BEAM, PORT, GROUP (Mod. 1300)	1	—		MC16/938
	1F11790	PANEL, ACCESS, HONEYCOMB, AFT CENTRE BEAM, STARBOARD, GROUP (Pre-Mod. 2190)	1	—		MC16/939
1510758	34F11790	PANEL, ACCESS, HONEYCOMB, AFT CENTRE BEAM, STARBOARD, GROUP (Mod. 2372)	1	—	B	
		Spares for:—				
	55F10089	PANEL, ACCESS, PORT, GROUP	1	—		MC16/940
	86F11101	PANEL, ACCESS, STARBOARD, GROUP	1	—		MC16/941
		Spares for:—				
	43F9590	Bolt, special	6	S2	MR	MC16/942
28FP/4069912	TFR5/16K	Fastener, Dzus	4	—	C	
28FP/4069913	TFR5/17K	Fastener, Dzus	10	—	C	
28FP/4069915	TFR5/19K	Fastener, Dzus	23	—	C	
28FP/4069916	TFR5/20K	Fastener, Dzus	34	—	C	
28FP/1278232	TFR5/32K	Fastener, Dzus	1	—	C	
	TFR5/24M	Fastener, Dzus	6	—		
28FP/4069928	TF5/1G	Grommet, Dzus	78	—	C	
	41F11101	Panel, access, oxygen charging valve, starboard	1	—	MR	MC16/943
	13F11101	PLATE, COVER, GROUP	2	—	MR	MC16/944
		Attachments—Cover Plate Part No. 13F11101				
26FP/6946	2SS4353	Bolt, csk. hd., 2 BA	18	—	C	
	61F10089	Seal (Poly-Urathane)	4	—	MR	
	62F10089	Seal (Poly-Urathane)	3	—	MR	
	64F10089	Seal (Poly-Urathane)	1	—	MR	
13653	6F11789	PANEL, BLANKING, GROUP	2	—	C	MC16/945
		Attachments—Blanking Panel, Part No. 6F11789				
28D/1013284	AS1248/2C	Bolt, mush. hd., 2 BA	16	—	C	

Ref. No.	Part No.	Description (1 2 3 4)	No. off	Matl. Spec.	Cl. of St. / M.R.	Plate and Illust'n No.
1510757	65F11789	PANEL, ACCESS, HONEYCOMB, AFT ...	1	–	A	MC16/946
		CENTRE BEAM, PORT, GROUP (Mod. 2372) (Make from 26F11789)				
13583	1F11800	PANEL, SKIN, R.B.W. PORT, GROUP	1	–	C	MC16/947
	2F11800	PANEL, SKIN, R.B.W. STARBOARD, ... GROUP (Pre-Mod. 2190)	1	–		MC16/948
1433530	27F11800	PANEL, SKIN, R.B.W. STARBOARD, ... GROUP (Mod. 2190)	1	–	C	
		Spares for:–				
	43F9590	Bolt, special	3	S2	MR	MC16/949
28FP/4069912	TFR5/16K	Fastener, Dzus	4	–	C	
28FP/4069916	TFR5/20K	Fastener, Dzus	12	–	C	
	TFR5/24M	Fastener, Dzus	6	–		
28FP/4069928	TFR5/1G	Grommet, Dzus	22	–	C	
13654	22F11800	Panel, cover (Pre Mod. 2190)	1	–	C	MC16/950
		Attachments–Cover Panel, Part No. 22F11800				
28D/1007981	AS1248/1/2C	Bolt, much. hd., 2 BA	8	–	C	
1433531	28F11800	Panel, cover (Mod. 2190)	1	–	C	
	117F10026	RAMP, EXTRACTOR, PORT, GROUP .... (Mod. 2372)	1	–		MC16/951
	118F10026	RAMP, EXTRACTOR, STARBOARD, ... GROUP (Mod. 2372)	1	–	C	MC16/952
		STRUCTURE, TOP, UNDERCARRIAGE BAY (F10091)				
		Spares for:–				
1432869	1F12719	BRACKET, ASSEMBLY (Mod. 2181)	2	–	C	
		Spares for:–				
	3F12719	Bracket	1	–	MR	
1510715	4F12719	Bracket, fork	1	–	C	
	3F9700	MOUNTING, BOTTOM, RIB 618.186, PORT ... AND STARBOARD, GROUP	2	–	MR	MC16/953
	7F9700	MOUNTING, BOTTOM, RIB 618.186, PORT ... AND STARBOARD, GROUP	2	–	MR	MC11/954
		Attachments–Mounting, Part Nos. 3 & 7F9700				
28D/1214526	A59/C/1	Bolt, 2 BA	4	–	C	
28M/1012015	AGS2001/C1/66	Nut, stiff, 2 BA	4	–	C	
28W/9419475	SP15/C	Washer, 2 BA	4	–	C	
	335F9705	Washer, special	4	–	MR	

MAINPLANES

INNER MAINPLANES

Ref. No.	Part No.	Description 1 2 3 4	No. off	Matl. Spec.	Cl. of St. / M.R.	Plate and Illust'n No.

Ref. No.	Part No.	Description (1 2 3 4)	No. off	Matl. Spec.	Cl. of St. / M.R.	Plate and Illust'n No.
		COMPLEMENTARY ITEMS				
		ATTACHMENT FITTINGS, FRONT SPAR JOINT, INNER TO OUTER WING, PORT & STARBOARD (1F10812)				
		Spares for:–				
6475	16F9893	Bolt, special, shackle top	2	S99	C	MC18/955
6476	7F10812	Bolt, special, shackle bottom	2	S99	C	MC18/956
28M/4095892	A27/NS	Nut, slotted, 1/2" BSF	4	–	C	
28M/1012015	AGS2001/C1/66	Nut, stiff, 2 BA	33	–	C	
28P/19155	SP90/E12	Pin, cotter, split	4	–	C	
6482	120F9893	Plate, rubbing	8	L72	C	MC18/957
6478	8F9861	Shackle, top and bottom joint	4	S96	C	MC18/958
6483	6F10812	Washer, special under head of shackle bolt	4	S1	C	
6477	6F9861	Washer, special	4	L72	C	
28W/9419402	SP13/C	Washer, 2 BA	33	–	C	
		ATTACHMENT FITTINGS, REAR SPAR JOINT, INNER TO OUTER WING, PORT AND STARBOARD (F9893 SHT. 3)				
		Consisting of:–				
6475	16F9893	Bolt, special, shackle bottom	4	S99	C	MC18/959
6484	17F9893	Bolt, special, shackle top	4	S99	C	MC18/960
28D/1212340	A60/3G	Bolt, 5/16" BSF	12	–	C	
28D/1212342	A60/5G	Bolt, 5/16" BSF	4	–	C	
28M/4095892	A27/NS	Nut, slotted, 1/2" BSF	8	–	C	
28M/4199618	A58/GT	Nut, thin, 5/16" BSF	16	–	C	
28P/19155	SP90/E12	Pin, cotter, split	8	–	C	
6486	12F9893	Plate, joint	1	–	C	MC5/961
6478	8F9861	Shackle, joint	8	S96	C	MC18/962
6485	15F9893	Washer, special, under head of shackle bolt	8	–	C	
	32F7753	Washer, special	8	–		
28W/9419403	SP13/G	Washer, 5/16"	16	–	C	
		ATTACHMENT FITTINGS, FLYING CONTROL RODS, INNER TO OUTER WING JOINT, PORT AND STARBOARD (9 & 10F9700)				
		Consisting of:–				
28D/1213555	A60/10G	Bolt, 5/16" BSF	1	–	C	
28D/9436920	A25/1C	Bolt, 2 BA	1	–	C	
28M/4199604	A58/GS	Nut, slotted, 5/16" BSF	1	–	C	
28M/9433473	AGS2002/C/1	Nut, stiff, 2 BA	1	–	C	
28P/9527619	SP90/C7	Pin, cotter, split	1	–	C	
28W/9419403	SP13/G	Washer, 5/16"	1	–	C	
28W/9419402	SP13/C	Washer, 2 BA	1	–	C	

Ref. No.	Part No.	Description 1 2 3 4	No. off	Matl. Spec.	Cl. of St. M.R.	Plate and Illust'n No.
		COMPLEMENTARY ITEMS (Cont'd)				
		ATTACHMENTS, AILERONS, INBOARD AND OUTBOARD, PORT AND STARBOARD (F9702) Consisting of:–				
28M/9156370	TECALEMIT SP21	Nipple, lubricating	5	–	C	
28D/9140647	A25/14C	Bolt, 2 BA	2	–	C	
28D/1011021	A25/16C	Bolt, 2 BA	3	–	C	
28M/1013107	A24/CS	Nut, slotted, 2 BA	5	–	C	
28P/9527619	SP90/C7	Pin, cotter, split	5	–	C	
6552	5F9702	Pin, hinge, at rib 623	1	–	C	MC18/963
6554	7F9702	Pin, hinge, at rib 60.25 & 197.5	2	–	C	MC18/964
	51F9702	Pin, hinge, at rib 126.5 (Mod. 577)	1	S96	MR	MC18/965
	45F9702	Pin, hinge, at rib 618.186	1	S99	MR	MC18/966
		ATTACHMENTS ELEVATORS, INBOARD AND OUTBOARD, PORT AND STARBOARD (F9701) Consisting of:–				
	113F7500	Adaptor, centre hinge pin (Pre Mod. 592)	1	DTD363A		MC18/967
	25F9701	Adaptor, inboard and centre hinge pin (Mod. 592)	2	S96	MR	MC18/968
28N/9156370	TECALEMIT SP21	Nipple, lubricating	2	–	C	
28M/1203493	AGS572/K	Nut, thin, slotted, 5/8" BSF	2	–	C	
	85F8636	Nut, special	2	–	MR	
28P/19155	SP90/E12	Pin, cotter, split	2	–	C	
	26F9701	Pin, hinge	1	–	MR	MC18/969
	27F9701	Pin, hinge	1	–	MR	MC18/970
28W/9419470	SP13/Q	Washer, 5/8"	4	–	C	
		PANEL, ACCESS, FUEL SUMP No. 5 TANK JOINT INNER TO OUTER WING, PORT AND STARBOARD (F9700) Spares for:–				
	3F10882	PANEL, ACCESS, PORT, GROUP (Pre Mod. 1017)	1	–		MC15/971
10282	51F10882	PANEL, ACCESS, PORT, GROUP (Mod. 1017)	1	–		MC15/972
	4F10882	PANEL, ACCESS, STARBOARD (Pre Mod. 1017)	1	–		
10283	52F10882	PANEL, ACCESS, STARBOARD, GROUP (Mod. 1017) Spares for:–	1	–	C	
28FP/4069922	DZUS TFR5/23M	Fastener	2	–	C	
	KING AIRCRAFT C8352	Fastener	38	–	MR	
13756	54F10882	PANEL, ACCESS Attachments–Access Panel Part No. 54F10882	1	–		MC15/973
	1SS4353	Bolt, csk. hd.	3	–	MR	MC15/974

Ref. No.	Part No.	Description (1 2 3 4)	No. off	Matl. Spec.	Cl. of St. M.R.	Plate and Illust'n No.
		COMPLEMENTARY ITEMS (Cont'd)				
		SEALING, ELEVATOR, PORT AND STARBOARD (1 & 2F9866) Consisting of :—				
	3F9866	**SEAL, OUTBOARD, PORT, GROUP**	1	—	**MR**	MC18/975
	4F9866	**SEAL, OUTBOARD, STBD., GROUP**	1	—	**MR**	MC18/976
	39F8488	**SEAL, INBOARD, PORT, GROUP**	1	—	**MR**	MC18/977
	10F8488	**SEAL, INBOARD, STBD., GROUP** ...	1	—	**MR**	MC18/978
	5F9866	**Strip,** retaining, outboard, outer elevator, 2′ 0″ long, port	1	L72	**MR**	MC18/979
	6F9866	**Strip,** retaining, outboard, outer elevator, 2′ 0″ long, starboard	1	L72	**MR**	MC18/980
	7F9866	**Strip,** retaining, forward of outer elevator, 8′ 0″ long, port	1	L72	**MR**	MC18/981
	8F9866	**Strip,** retaining, forward of outer elevator, 8″ 0′ long, starboard	1	L72	**MR**	MC18/982
	9F9866	**Strip,** retaining, forward of outer elevator, 7′ 6″ long, port	1	DTD297 or L44	**MR**	MC18/983
	10F9866	**Strip,** retaining, forward of outer elevator, 7′ 6″ long, starboard	1	DTD297 or L44	**MR**	MC18/984
	11F9866	**Strip,** retaining, outboard of outer elevator, 2′ 0″ long, port	1	DTD297 or L44	**MR**	MC18/985
	12F9866	**Strip,** retaining, outboard of outer elevator, 2′ 0″ long, starboard	1	DTD297 or L44	**MR**	MC18/986
	15F8488	**Strip,** retaining, inboard outer elevator, 3′ 0″ long, port	1	L72		MC18/987
	16F8488	**Strip,** retaining, inboard, outer elevator, 3′ 0″ long, starboard	1	L72		MC18/988
	23F8488	**Strip,** retaining, outboard, inner elevator, 3′ 0″ long, port	1	L72		MC18/989
	24F8488	**Strip,** retaining, outboard, inner elevator, 3′ 0″ long, starboard	1	L72		MC18/990
	25F8488	**Strip,** retaining, forward inner elevator, 8′ 0″ long, port	1	L72	**MR**	MC18/991
	26F8488	**Strip,** retaining, forward, inner elevator, 8′ 0″ long, starboard	1	L72		MC18/992
	27F8488	**Strip,** retaining, inboard, inner elevator, 3′ 6″ long, port	1	L72		MC18/993
	28F/8488	**Strip,** retaining, inboard, inner elevator, 3′ 6″ long, starboard	1	L72		MC18/994
	40F8488	**Strip,** retaining, outboard, inner elevator, 3′ 0″ long, port	1	DTD297 or L44	**MR**	MC18/995
	41F8488	**Strip,** retaining, outboard, inner elevator, 3′ 0″ long, starboard	1	DTD297 or L44	**MR**	MC18/996
	41F8488	**Strip,** retaining, outboard, inner elevator, 3′ 0″ long, starboard	1	DTD297 or L44	**MR**	MC18/996
	44F8488	**Strip,** retaining, forward, inner elevator, 7′ 6″ long, port	1	DTD297 or L44	**MR**	MC18/997
	45F8488	**Strip,** retaining, forward inner elevator, 7′ 6″ long, starboard	1	DTD297 or L44	**MR**	MC18/998

MAINPLANES

INNER MAINPLANES

Ref. No.	Part No.	Description 1 2 3 4	No. off	Matl. Spec.	Cl. of St. M.R.	Plate and Illust'n No.
		SEALING, ELEVATOR, PORT AND STARBOARD (1 & 2F9866) (Cont'd)				
	48F8488	**Strip,** retaining, inboard inner elevator 3′ 6″ long, port	1	DTD297 or L44	MR	MC18/999
	49F8488	**Strip,** retaining, inboard, inner elevator, 3′ 6″ long, starboard	1	DTD297 or L44	MR	MC18/1000
	50F8488	**Strip,** retaining, inboard, outer elevator, 3′ 0″ long, port	1	DTD297 or L44	MR	MC18/1001
	51F8488	**Strip,** retaining, inboard, outer elevator, 3′ 0″ long, starboard	1	DTD297 or L44	MR	MC18/1002
28D/1215078	AS1246/5C	**Bolt,** rd. hd., 2 BA	2	—	C	
28D/1215327	AS1246/1E	**Bolt,** rd. hd., ¼″ BSF	1	—	C	
28W/9416644	SP47/E	**Washer,** spring, ¼″	1	—	C	
		Attachment—Seal, Part Nos. 3 & 4 F9866 and 10 & 39F8488				
28D/9140202	AS1246/1C	**Bolt,** rd. hd., 2 BA	150	—	C	

INNER MAINPLANES

SUMMARY OF STANDARD ITEMS

Stores Ref.		No. off	Stores Ref.		No. off	Stores Ref.		No. off
Section	Ref. No.		Section	Ref. No.		Section	Ref. No.	
28D	8337	12	28D	1215327	1	28FP	4069916	46
28D	13116	1	28D	1215682	12	28FP	4069917	5
28D	16289	4	28D	1218385	25	28FP	4069918	7
28D	16290	4	28D	1218444	8	28FP	4069919	9
28D	17238	4	28D	9133011	QR	28FP	4069922	2
28D	19676	4	28D	9133012	258	28FP	4069926	10
28D	20184	35	28D	9133013	19	28FP	4069927	28
28D	20434	8	28D	9133014	3	28FP	4069928	185
28D	700428	2	28D	9137408	4	28FP	1201	1
28D	1007285	13	28D	9140202	150	28FP	4069999	1
28D	1007972	4	28D	9140645	1	28FP	9469709	2
28D	1007973	4	28D	9140647	2	28FP	9144248	22
28D	1007975	18	28D	9142406	QR	28FP	9145888	16
28D	1007979	8	28D	9419645	2	28FP	9145889	16
28D	1007981	26	28D	9434873	5	28FP	9430915	42
28D	1007982	14	28D	9435053	1	28FP	9430916	56
28D	1010658	1	28D	9435059	8	28FP	9430917	20
28D	1011021	3	28D	9435710	2	28FP	9488815	14
28D	1011022	4	28D	9436920	59	28FP	9489246	14
28D	1011238	4				28FP	9494288	10
28D	1011240	16						
28D	1012995	7	28DU	9480226	4			
28D	1013172	91				28M	10281	2
28D	1013284	QR				28M	1278190	657
28D	1200119	QR	28E	9128961	1	28M	10290	QR
28D	1202334	8				28M	10291	QR
28D	1212340	12				28M	10292	1
28D	1212342	4	28F	9714	1	28M	10327	1
28D	1212371	3	28F	10504	2	28M	10328	1
28D	1212594	2	28F	10773	1	28M	13244	18
28D	1212825	8	28F	1011798	1	28M	13259	12
28D	1212941	4	28F	8011897	4	28M	13270	10
28D	1213410	1	28F	9157486	1	28M	13281	16
28D	1213446	4	28F	9439162	2	28M	13289	4
28D	1213447	20	28F	9486111	4	28M	13412	6
28D	1213514	8	28F	9513420	7	28M	13454	2
28D	1213555	1				28M	13553	12
28D	1213580	4				28M	13785	20
28D	1213596	3	28FP	4062373	20	28M	14537	1
28D	1213599	4	28FP	4062415	6	28M	14622	2
28D	1213606	11	28FP	340	20	28M	14877	20
28D	1213607	1	28FP	4062654	216	28M	15393	5
28D	1213759	1	28FP	4069912	8	28M	15496	16
28D	1214091	52	28FP	4069913	10	28M	15814	3
28D	1214526	49	28FP	4069915	25	28M	15991	2
28D	1215078	2	28FP	1229780	3	28M	16830	6
			28FP	1229781	4			
			28FP	1300170	15			

INNER MAINPLANES

SUMMARY OF STANDARD ITEMS

Stores Ref.		No. off	Stores Ref.		No. off	Stores Ref.		No. off
Section	Ref. No.		Section	Ref. No.		Section	Ref. No.	
28M	1006473	1	28W	7000392	12			
28M	1006939	10	28W	9416644	1			
28M	1007403	2	28W	9418921	15			
28M	1007404	2	28W	9419402	674			
28M	1011470	4	28W	9419403	53			
28M	1011473	16	28W	9419404	26			
28M	1011475	12	28W	9419405	QR			
28M	1011477	8	28W	9419429	6			
28M	1013107	5	28W	9419454	8			
28M	1204493	2	28W	9419465	8			
28M	5808571	14	28W	9419466	32			
28M	9129449	11	28W	9419467	48			
28M	9512070	4	28W	9419468	6			
28M	9512071	8	28W	9419469	18			
			28W	9419470	18			
			28W	9419471	7			
28N	5549	3	28W	9419472	1			
28N	9156370	7	28W	9419474	13			
			28W	9419475	41			
			28W	9419476	QR			
28P	831	1	28W	9419477	26			
28P	1022	1	28W	9419481	2			
28P	12408	5	28W	9419487	7			
28P	19129	12	28W	9419488	4			
28P	19155	10	28W	9419489	13			
28P	19159	8	28W	9419490	8			
28P	20348	38	28W	9419492	18			
28P	1012221	1	28W	9419493	10			
28P	1202464	1						
28P	9429619	3						
28P	9527619	62						
28S	1008327	4						
28S	1012450	4						
28S	9992522	8						
28S	9992525	4						

PLATE No MC 1
ISSUE 2

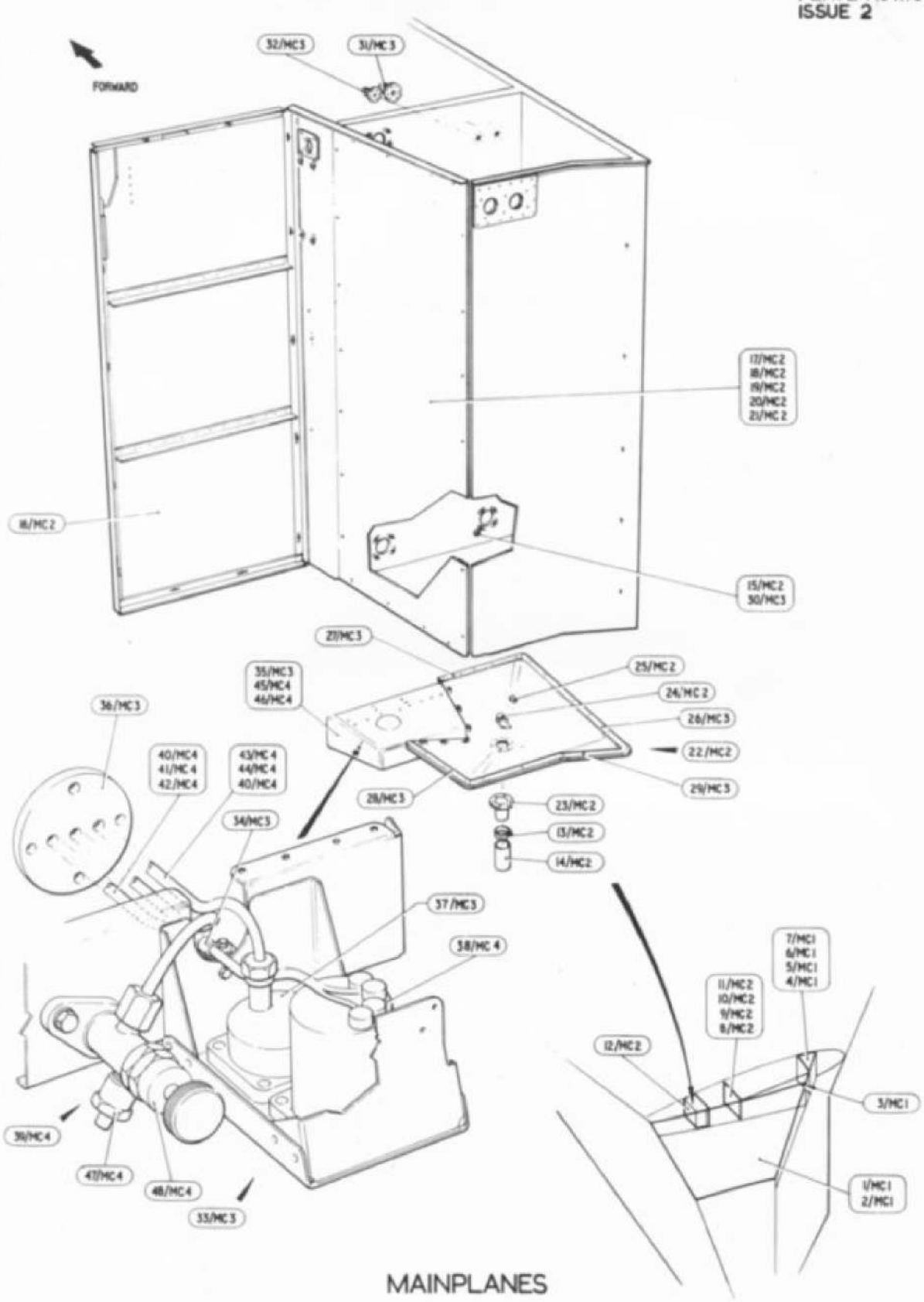

MAINPLANES
AUXILIARY AIRBORNE POWER UNIT

PLATE No. MC 2
ISSUE 2

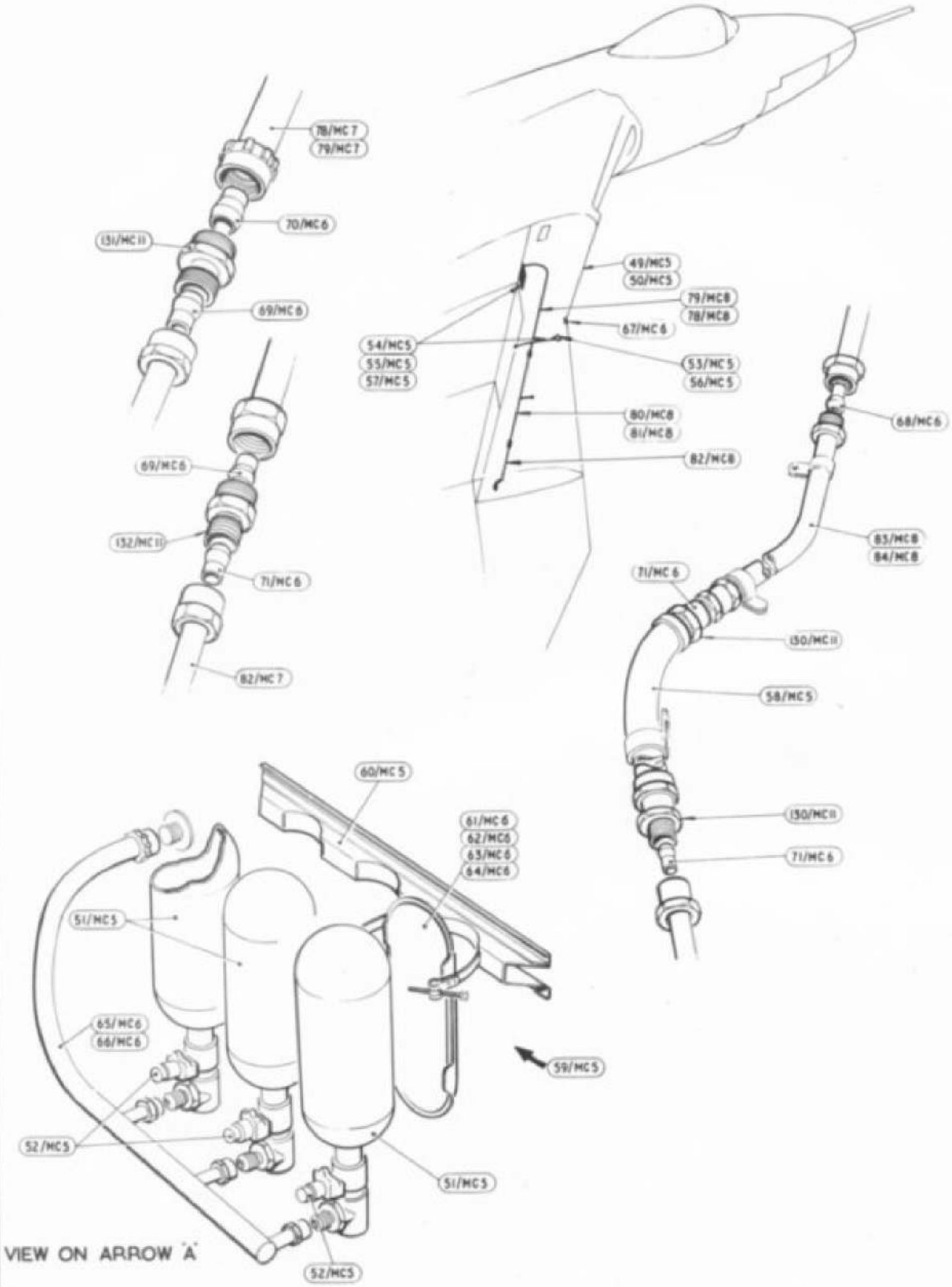

MAIN PLANES
FIRE PROTECTION

PLATE No. MC 3
ISSUE 2

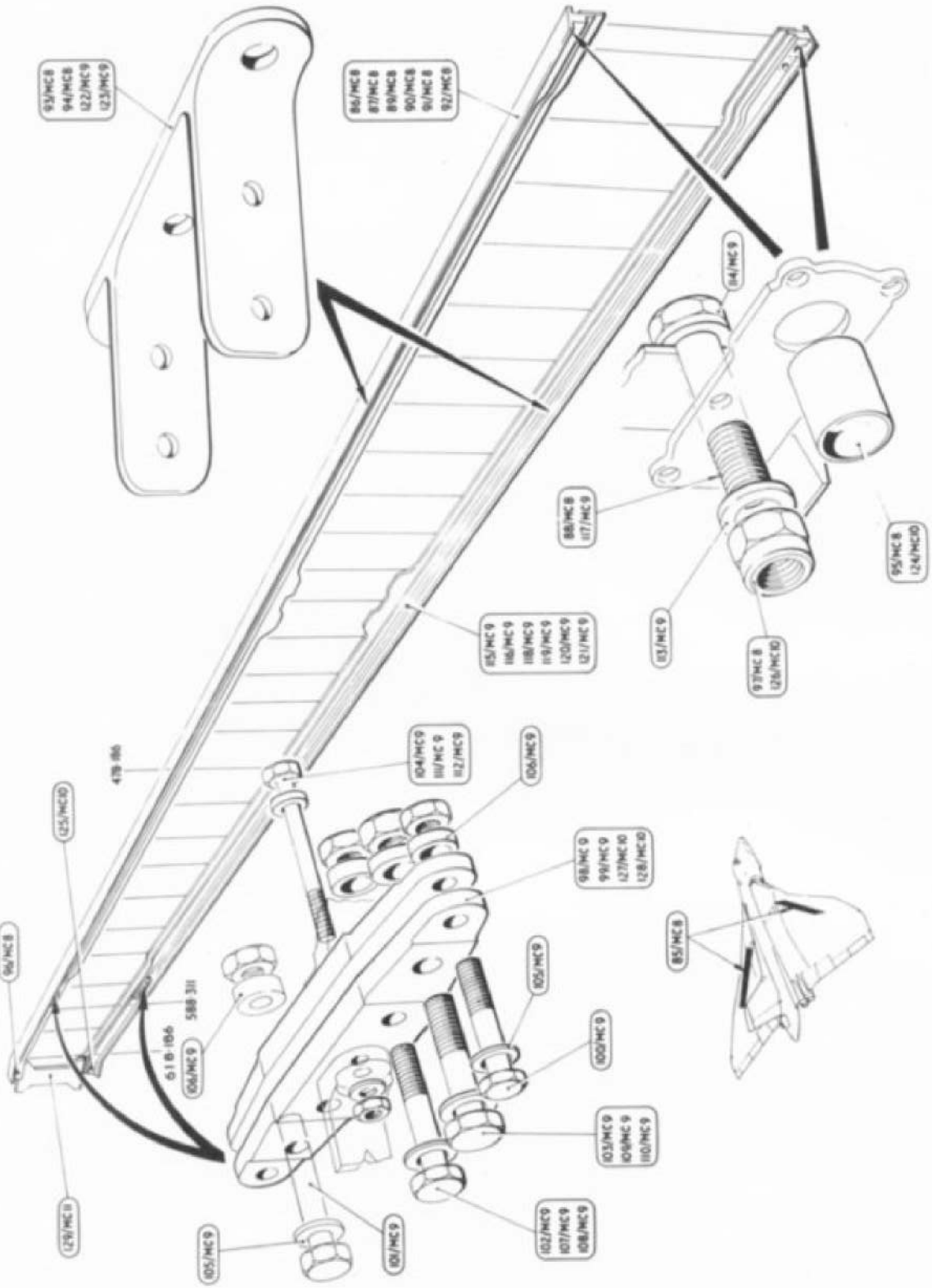

MAINPLANES
FRONT SPAR

PLATE No. MC4
ISSUE 2

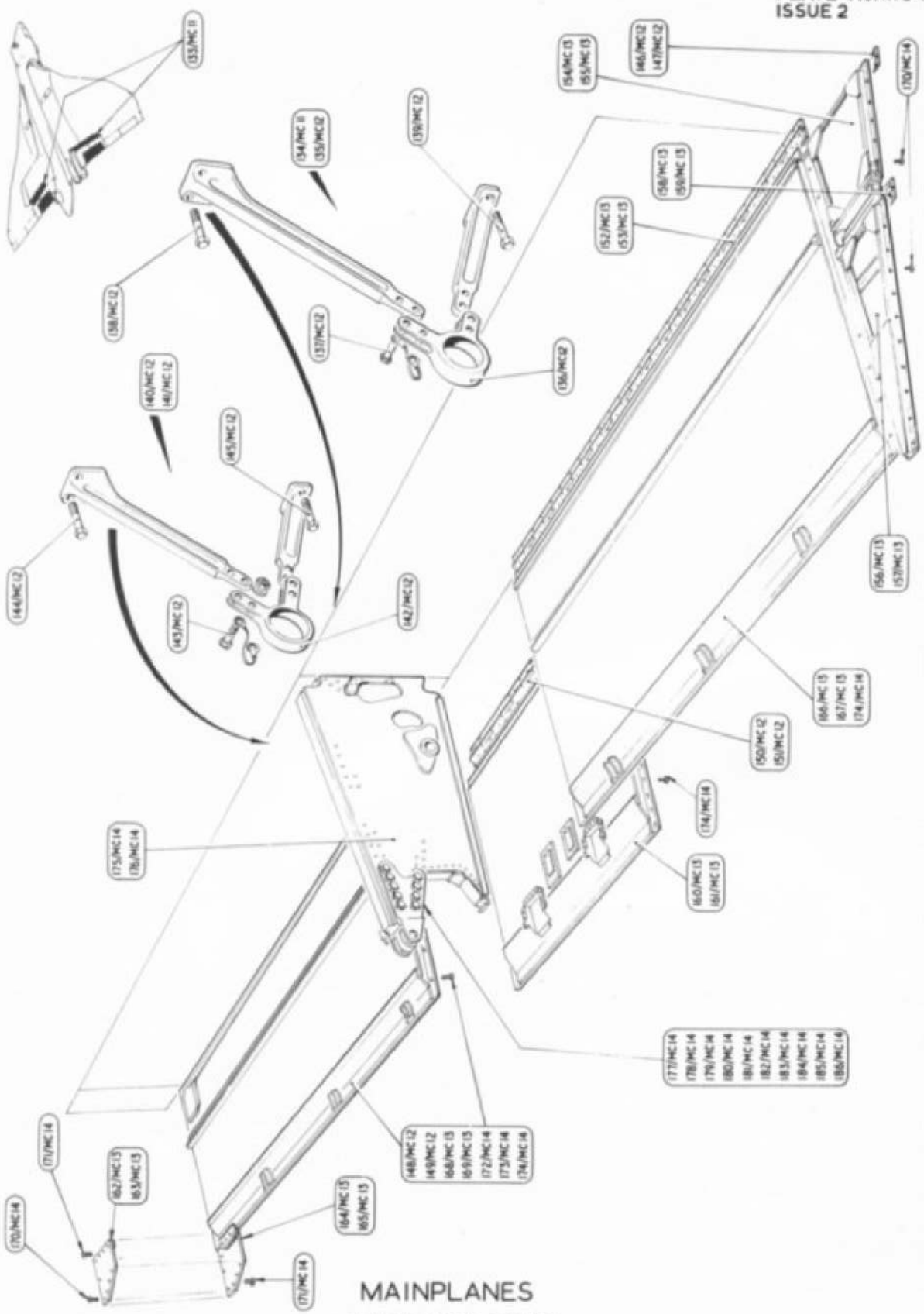

MAINPLANES
TRAILING EDGE

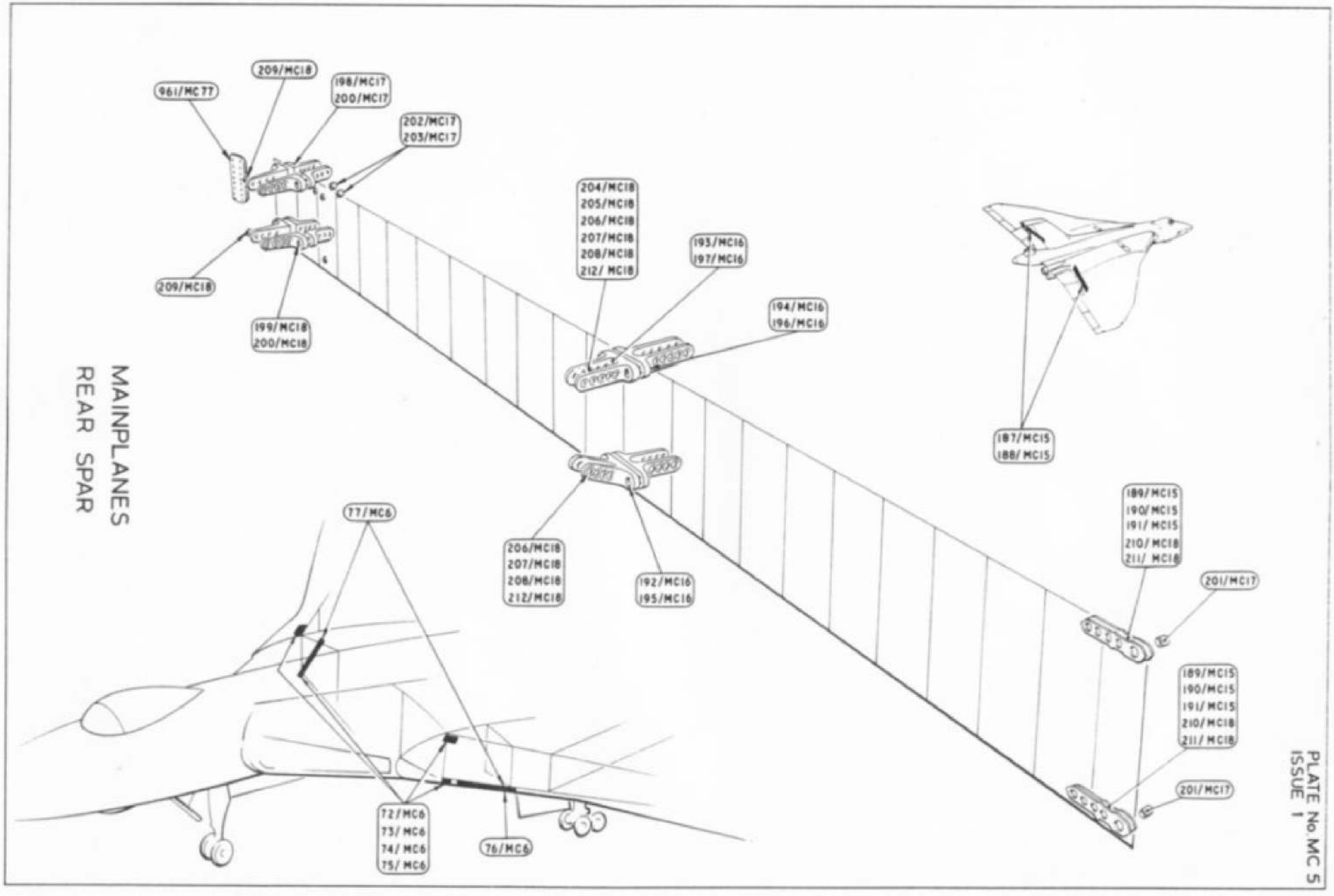

PLATE No MC 5
ISSUE 1

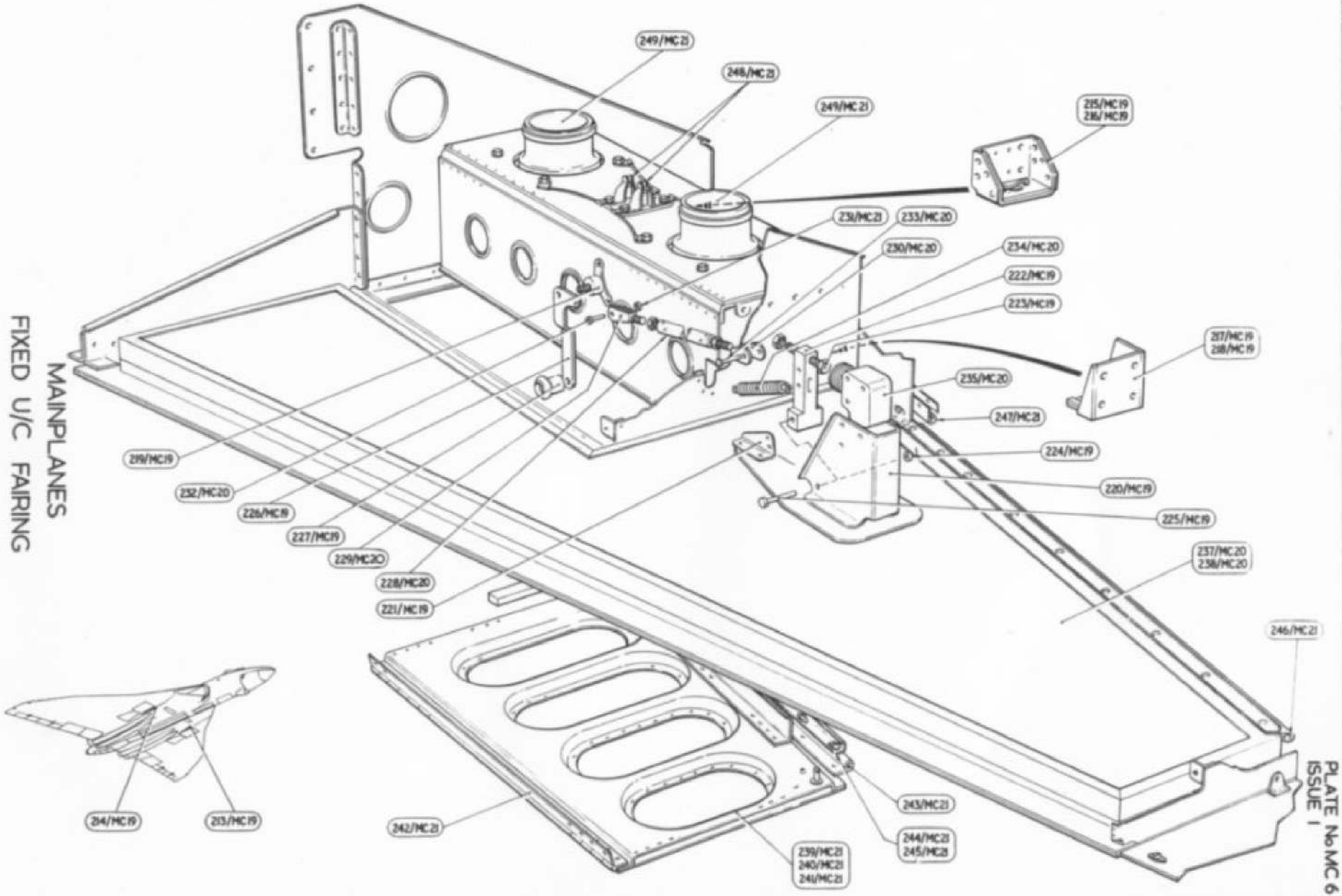

MAINPLANES
FIXED U/C FAIRING

PLATE No MC 6
ISSUE 1

PLATE No. MC 7
ISSUE 1

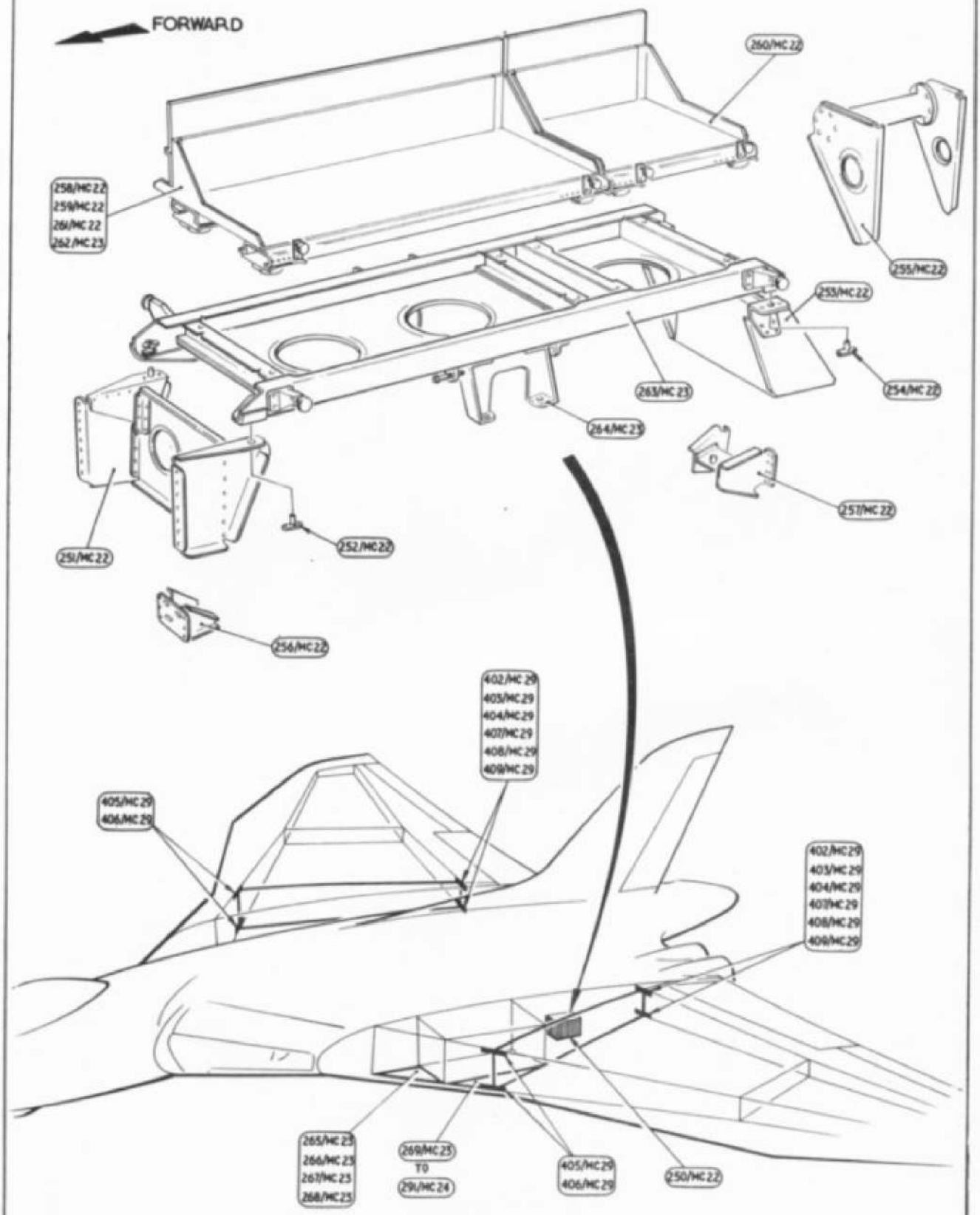

MAINPLANES

GREEN SATIN MOUNTING AND SKIN PANELS

PLATE No MC 8
ISSUE 1

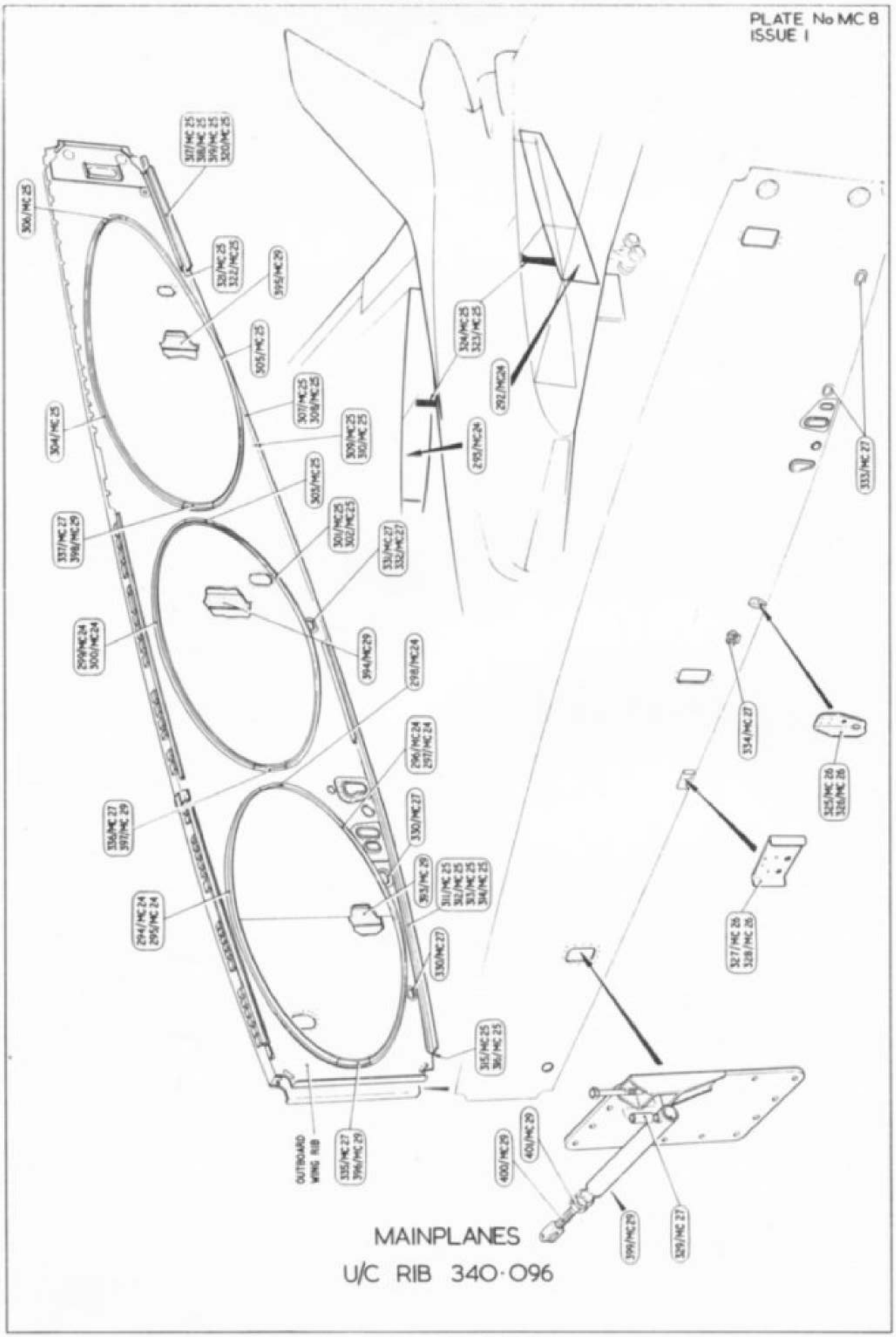

MAINPLANES

U/C RIB 340·096

PLATE No. MC 9
ISSUE 1

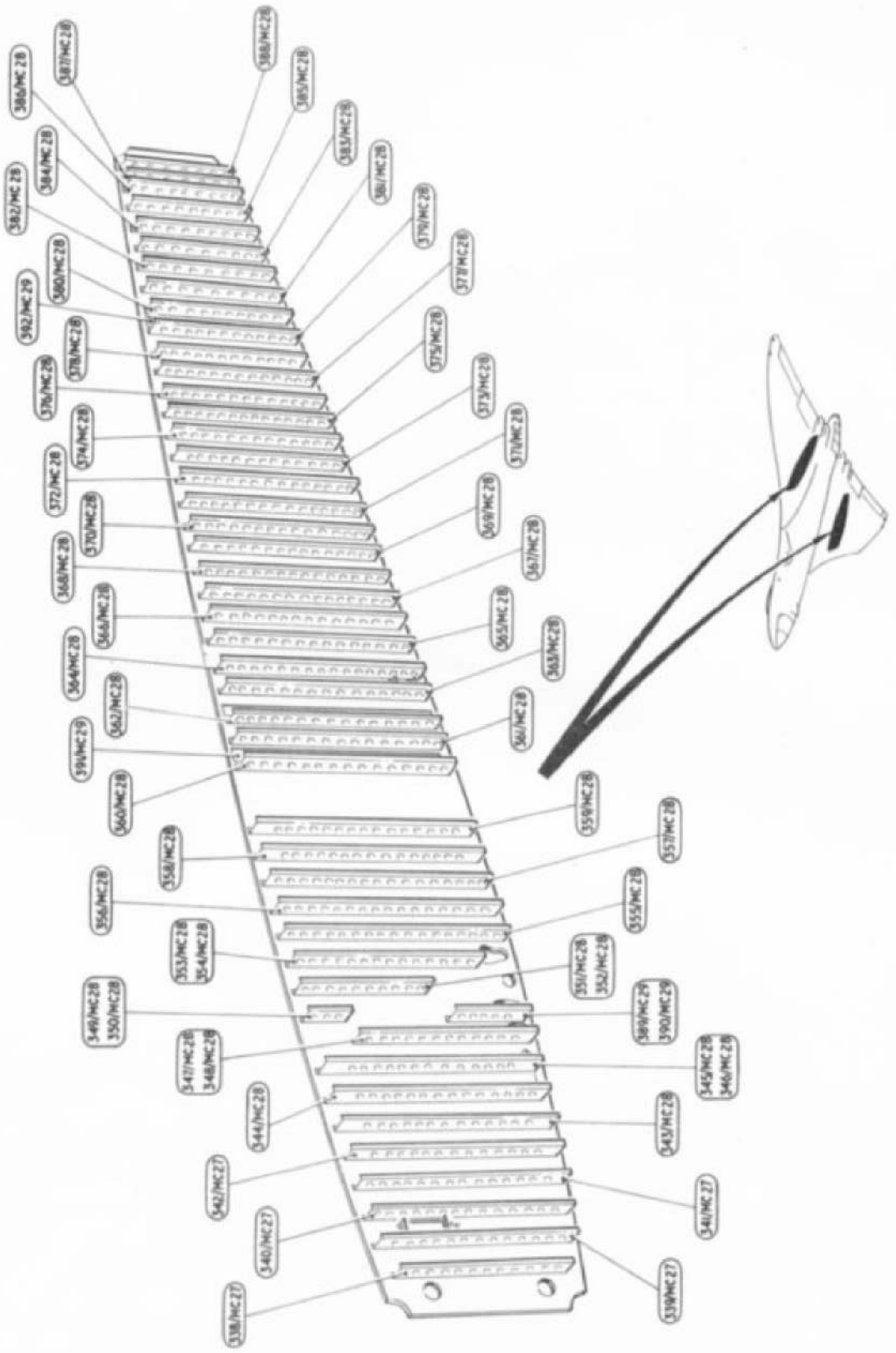

MAINPLANES

U/C RIB - INBOARD WEB - PORT / STBD.

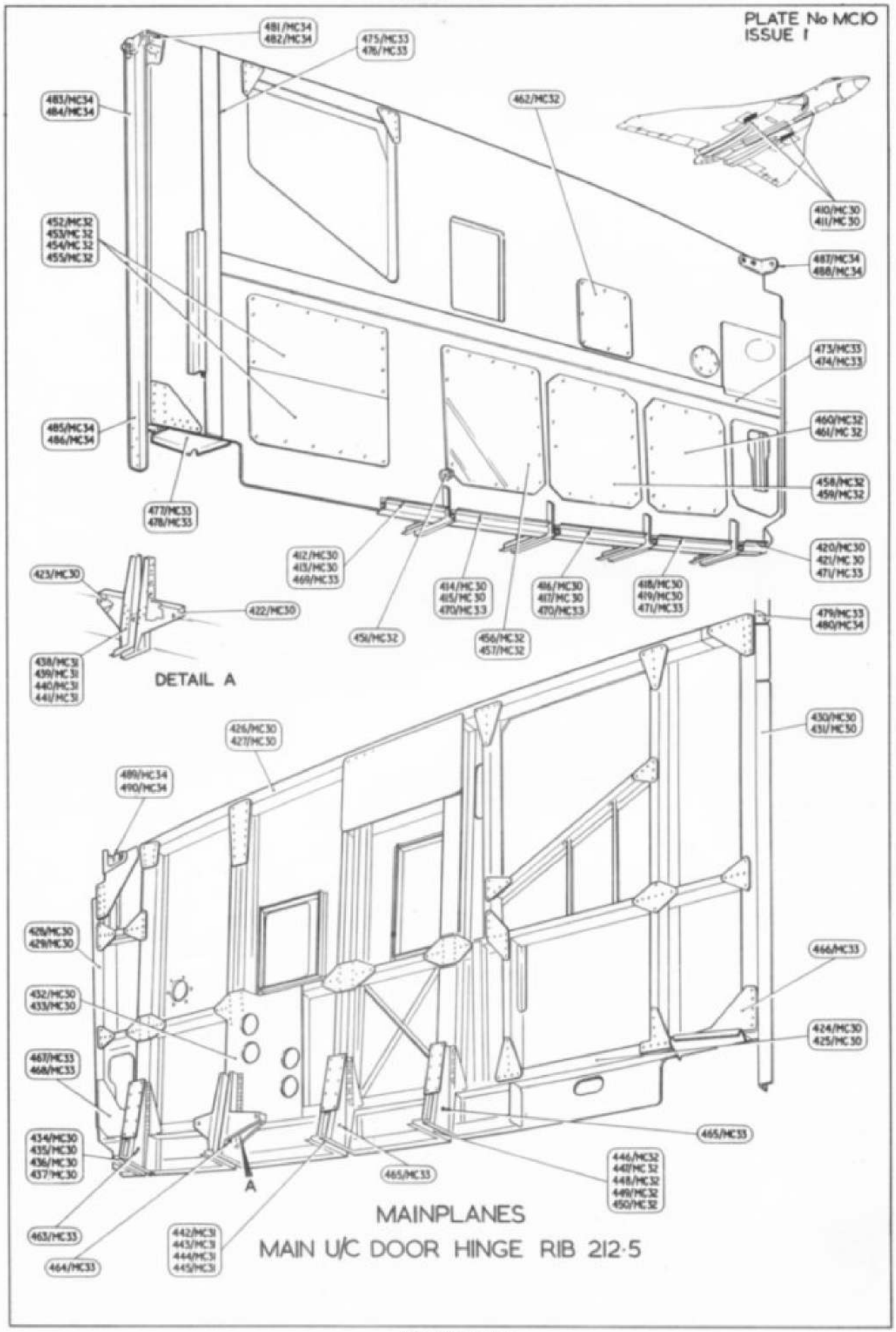
PLATE No MC10
ISSUE 1
481/MC34
482/MC34
475/MC33
476/MC33
483/MC34
484/MC34
462/MC32
410/MC30
411/MC30
452/MC32
453/MC32
454/MC32
455/MC32
487/MC34
488/MC34
473/MC33
474/MC33
485/MC34
486/MC34
460/MC32
461/MC32
458/MC32
459/MC32
477/MC33
478/MC33
420/MC30
421/MC30
471/MC33
412/MC30
413/MC30
469/MC33
423/MC30
422/MC30
414/MC30
415/MC30
470/MC33
416/MC30
417/MC30
470/MC33
418/MC30
419/MC30
471/MC33
479/MC33
480/MC34
456/MC32
456/MC32
457/MC32
438/MC31
439/MC31
440/MC31
441/MC31
DETAIL A
430/MC30
431/MC30
426/MC30
427/MC30
489/MC34
490/MC34
428/MC30
429/MC30
466/MC33
432/MC30
433/MC30
424/MC30
425/MC30
467/MC33
468/MC33
465/MC33
434/MC30
435/MC30
436/MC30
437/MC30
446/MC32
447/MC32
448/MC32
449/MC32
450/MC32
465/MC33
A
463/MC33
442/MC31
443/MC31
444/MC31
445/MC31
464/MC33
MAINPLANES
MAIN U/C DOOR HINGE RIB 212·5

PLATE No MC 11
ISSUE 1

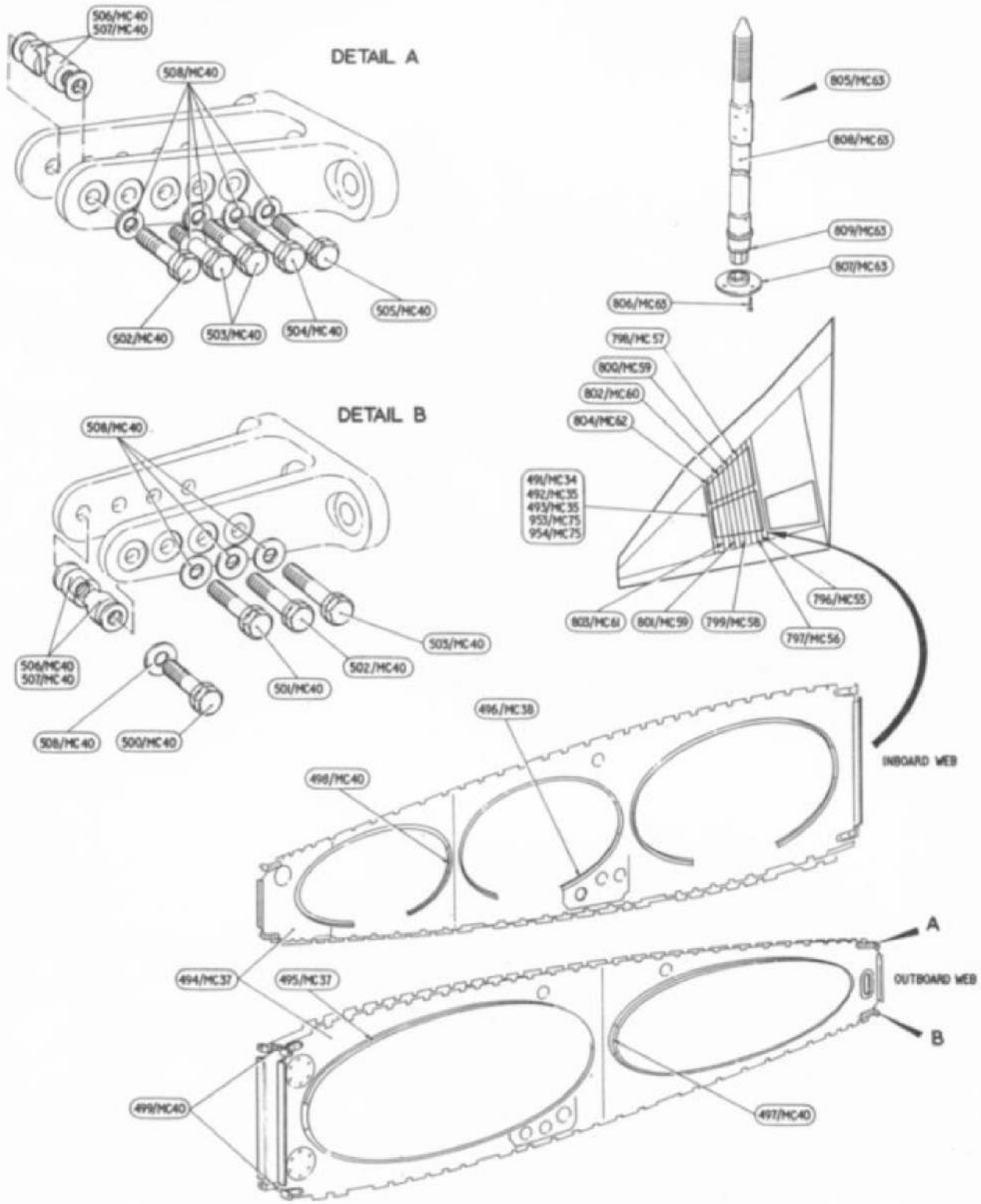

MAINPLANES

HINGE RIBS, 478·186 & 618·186

PLATE No.MC12
ISSUE 1

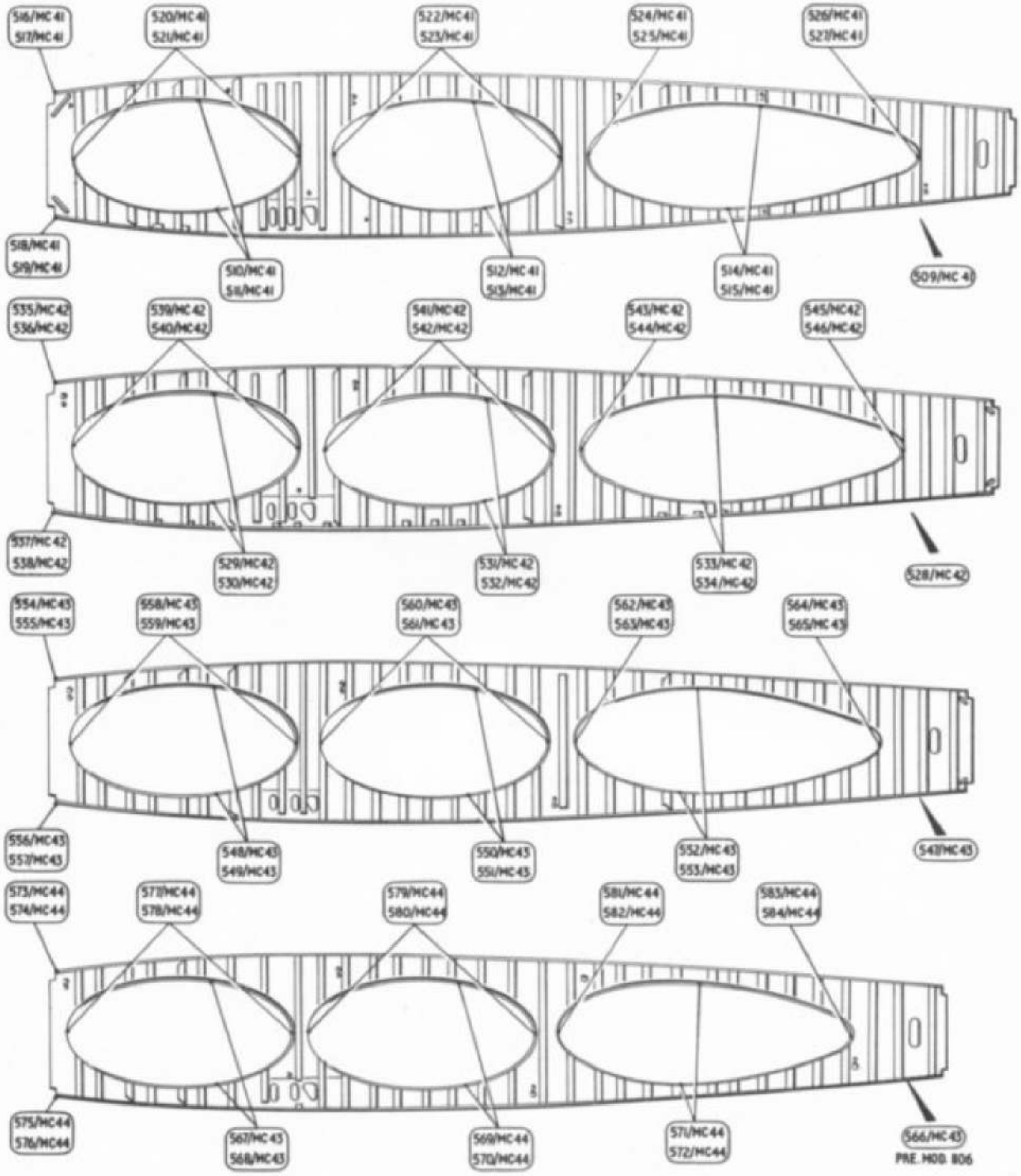

MAINPLANES
INNER TANK RIBS

PLATE No MC.13
ISSUE 1

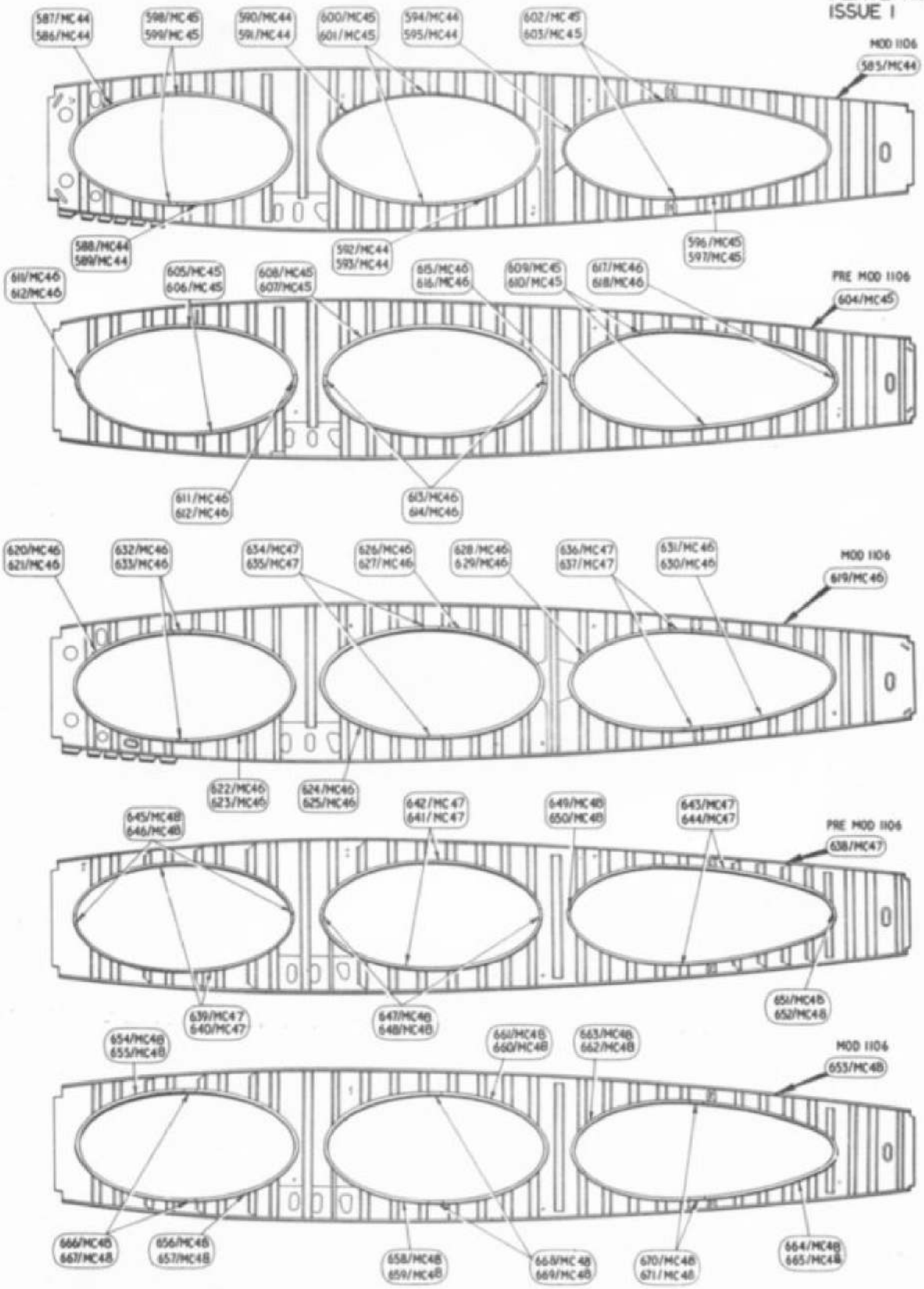

MAINPLANES
INNER TANK RIBS

PLATE No MC14
ISSUE 1

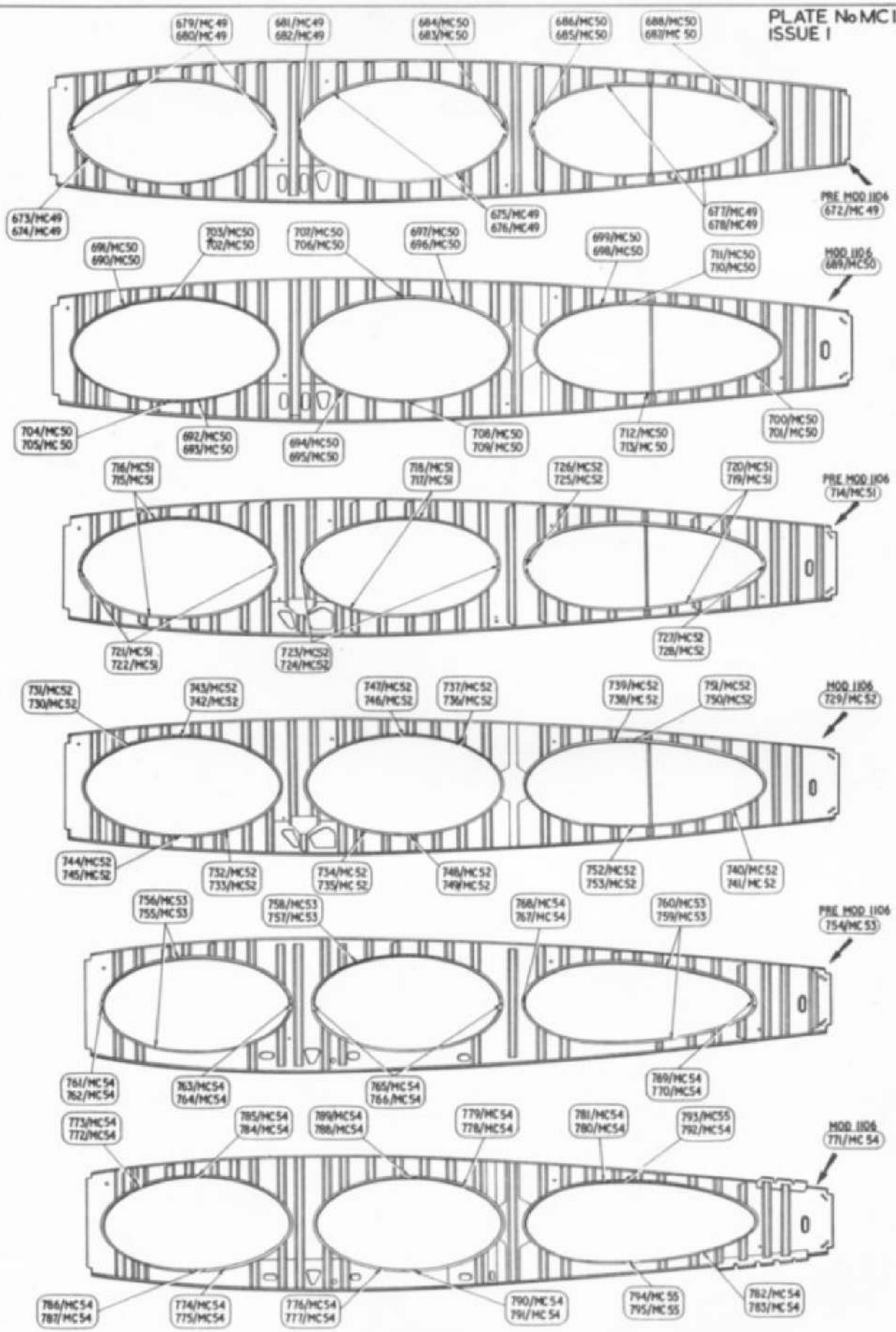

MAINPLANES, INNER TANK RIBS

PLATE No MC 15
ISSUE 2

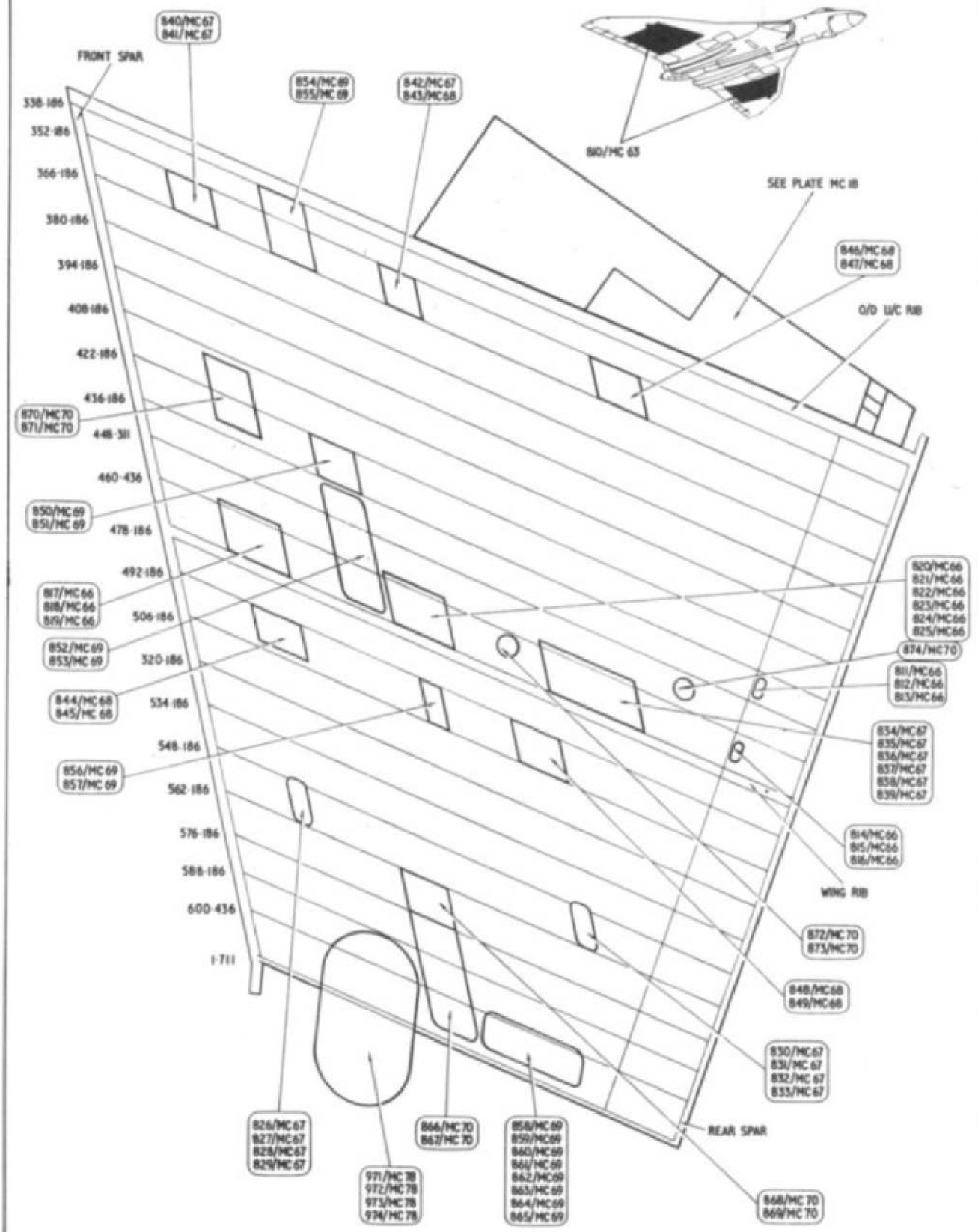

MAINPLANES

BOTTOM SKIN BETWEEN FRONT & REAR SPARS

MAINPLANES

BOTTOM STRUCTURE AFT OF REAR U/C BULKHEAD

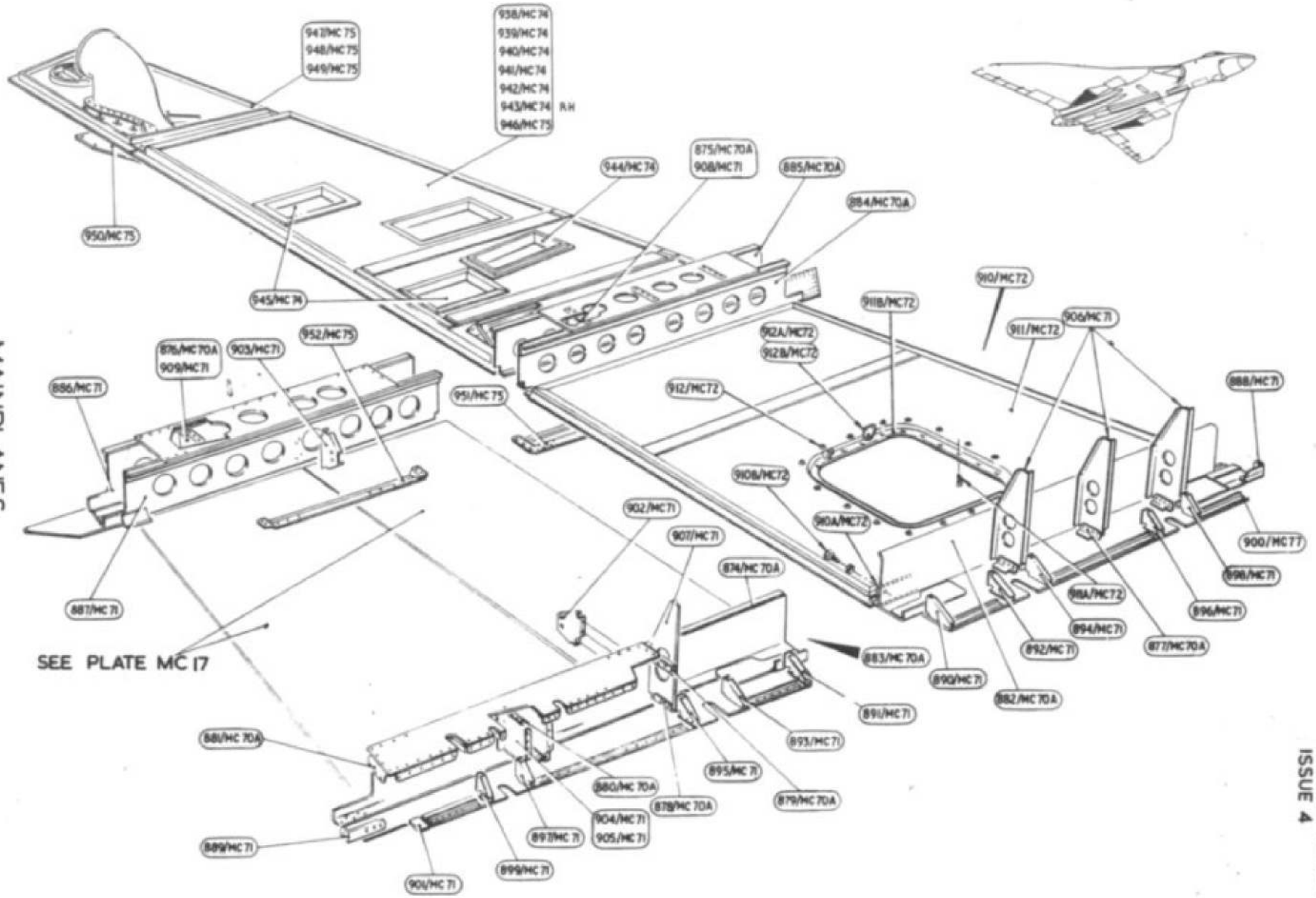

PLATE No. MC16
ISSUE 4

PLATE No. MC 17
ISSUE 2

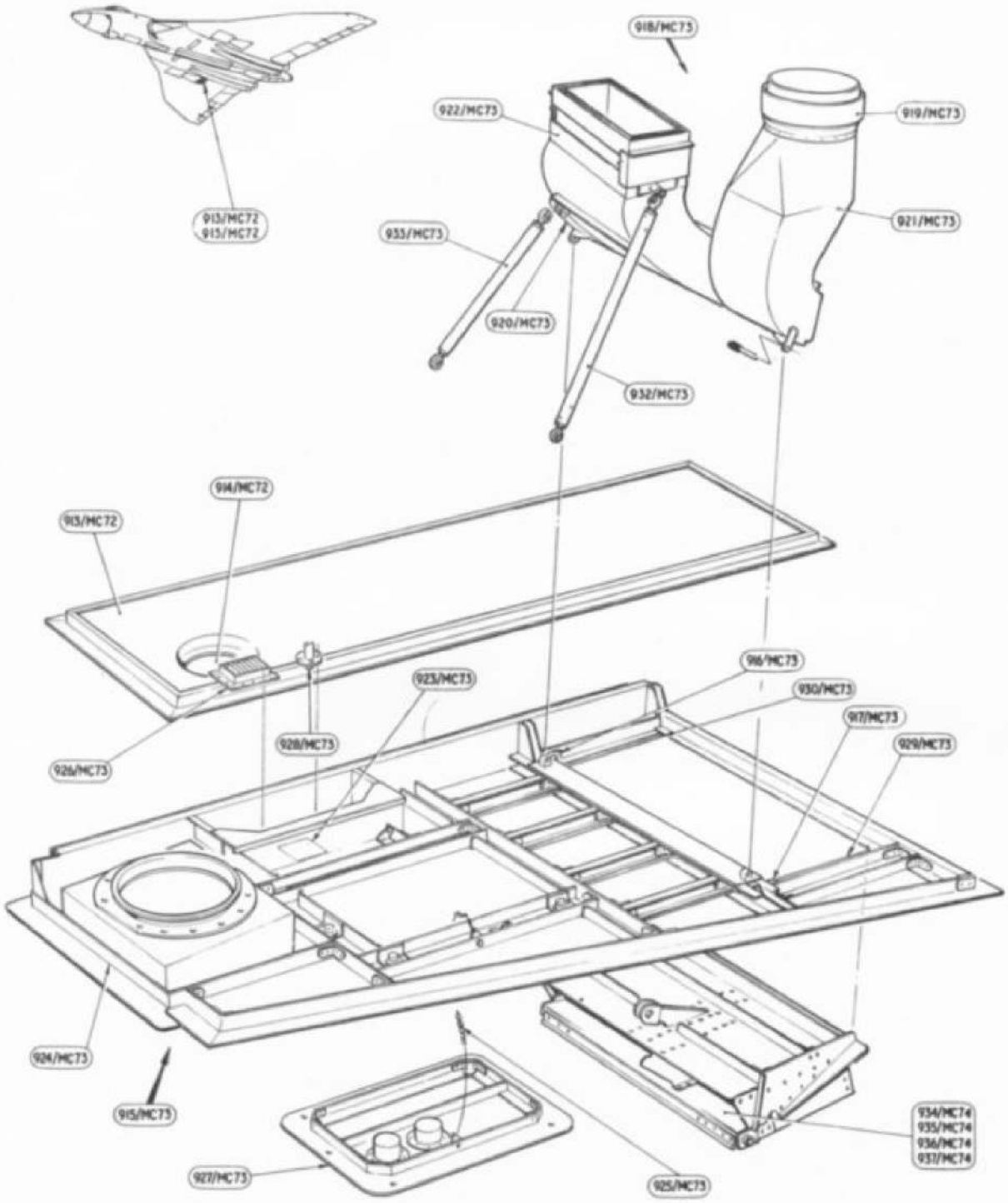

MAINPLANES
ACCESS PANELS BOTTOM STRUCTURE

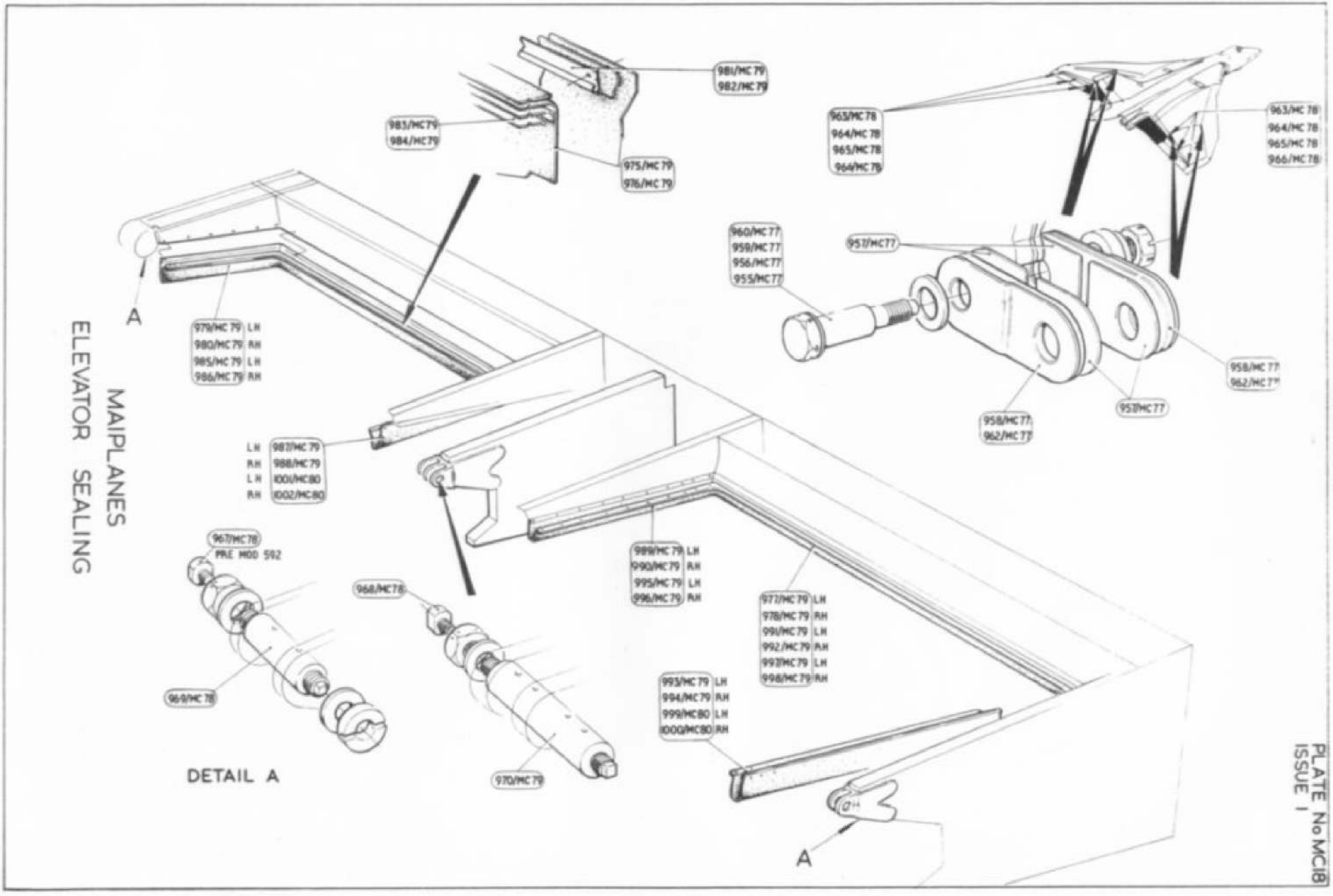

MAIPLANES
ELEVATOR SEALING

PLATE No MC18
ISSUE 1

This file was downloaded
from the RTFM Library.

Link: www.scottbouch.com/rtfm

Please see site for usage terms,
and more aircraft documents.