OUTER MAINPLANES

Ref. No.	Part No.	Description 1 2 3 4	No. off	Matl. Spec.	Cl. of St. / M.R.	Plate and Illust'n No.
	1F9702/C	MAINPLANE, OUTER PORTION, PORT, GROUP	1	–		MD1/1
	2F9702/C	MAINPLANE, OUTER PORTION, STARBOARD, GROUP	1	–		MD1/2
	1/F9702/PC	MAINPLANE, OUTER PORTION, PORT, GROUP	1	–		MD1/1
	2/F9702/PC	MAINPLANE, OUTER PORTION, STARBOARD, GROUP	1	–		MD1/2
		(Complementary parts, e.g. inter-component attachments, listed at the end of this assembly, will not be supplied with the assembly spare and must be demanded separately when required)				
		Spares for:–				
		CONTROLS, FLYING, PORT AND STARBOARD (1 & 2R4187)				
		(See Controls–Flying)				
	251F9666	EDGE, LEADING, PORT, GROUP	1	–	MR	MD1/3
	252F9666	EDGE, LEADING, STARBOARD, GROUP	1	–	MR	MD1/4
		Spares for:–				
	215F9666	PIPE, SPRAY, FORWARD FRONT SPAR, RIBS 14.91 TO 76.812, PORT AND STARBOARD, GROUP	1	L56	MR	MD1/5
		Attachments–Spray Pipe, Part No. 215F9666				
28D/9436920	A25/1C	Bolt, 2 BA	3	–	C	
	10SS3859	Clip, pipe	3	–	MR	
28M/1012015	AGS2001/C1/66	Nut, stiff, 2 BA	3	–	C	
28W/9419402	SP13/C	Washer, 2 BA	3	–	C	
	1F9857	SPAR, FRONT, PORT, GROUP	1	–	MR	MD1/6
	2F9857	SPAR, FRONT, STARBOARD, GROUP	1	–	MR	MD1/7
		Spares for:–				
6480	184F9856	Bush, top attachment, inboard	1	S96	C	MD1/8
6481	171F9857	Bush, bottom attachment inboard	1	S96	C	MD1/9
	1F9723	EDGE, TRAILING, PORT, GROUP	1	–	MR	MD1/10
	2F9723	EDGE, TRAILING, STARBOARD, GROUP	1	–	MR	MD1/11
		Spares for:–				
20804	277F9723	Angle, port	1	L72	C	MD3/12
20805	276F9723	Angle, starboard	1	L72	C	MD3/13
	352F9723	Angle, port	1	L72	MR	MD1/14
	353F9723	Angle, starboard	1	L72	MR	MD1/15
	51F9723	ANGLE, PORT, GROUP	1	–		
	52F9723	ANGLE, STARBOARD, GROUP	1	–		
		Attachments–Angle, Part Nos. 51 & 52F723				
28D/9709461	AS1242/3C	Bolt, csk. hd., 2 BA	3	–	C	
28D/9133012	A25/3C	Bolt, 2 BA	6	–	C	
28M/9403520	A27/CP	Nut, 2 BA	9	–	C	
28W/9419402	SP13/C	Washer, 2 BA	9	–	C	
	11F9723	Bracket, port	1	–	MR	
	12F9723	Bracket, starboard	1	–	MR	

Ref. No.	Part No.	Description 1 2 3 4	No. off	Matl. Spec.	Cl. of St. / M.R.	Plate and Illust'n No.
		EDGE, TRAILING, PORT AND STARBOARD, GROUP (1 & 2F9723) (Cont'd)				
		Attachments—Bracket, Part Nos. 11 & 12F9723				
28D/1215686	A59/7E	Bolt, 1/4" BSF	4	—	C	
28D/1215687	A59/8E	Bolt, 1/4" BSF	4	—	C	
28M/1011475	A27/EP	Nut, 1/4" BSF	8	—	C	
28W/9418921	SP13/E	Washer, 1/4"	8	—	C	
	3F9723	Bracket, power unit, port	1	DTD683	MR	
	4F9723	Bracket, power unit, starboard	1	DTD683	MR	
		Attachments—Bracket, Part Nos. 3 & 4F9723				
28D/91330011	A25/2C	Bolt, 2 BA	4	—	C	
28D/1008151	A25/4E	Bolt, 1/4" BSF	2	—	C	
28D/1275751	A59/12N	Bolt, 1/2" BSF	2	—	C	
28M/9403520	A27/CP	Nut, 2 BA	4	—	C	
28M/1011475	A27/EP	Nut, 1/4" BSF	2	—	C	
28M/4095949	A27/NC	Nut, castellated, 1/2" BSF	2	—	C	
28P/1202572	SP90/E9	Pin, cotter, split	2	—	C	
28W/9419402	SP13/C	Washer, 2 BA	4	—	C	
28W/9418920	SP10/E	Washer, 1/4"	2	—	C	
28W/9419468	SP13/N	Washer, 1/2"	2	—	C	
6529	199F9723	Panel, access	2	L72	C	MD1/16
6528	271F9723	Panel, access	1	L72	C	MD1/17
6527	200F9723	Panel, access, port	1	L72		MD1/18
20806	279F9723	Panel, access, starboard	1	L72	C	MD1/19
		Attachments—Access Panels, Part Nos. 199, 200, 271 & 279F9723				
26FP/6946	2SS4353	Bolt, csk. hd., 2 BA	6	—		
20807	354F9723	Panel, inspection door, port	1	—	C	MD1/20
20809	355F9723	Panel, inspection door, starboard	1	—	C	MD1/21
		Attachments—Inspection Panel, Part Nos. 354 & 355F9723				
	1SS4353	Bolt, csk. hd. 2 BA	6	—	MR	MD1/22
26FP/13044	1SS3260	Plate, serial	1	—	C	
26FP/13043	1SS3259	Plate, mod record	1	—	C	
		Attachments—Plate, Part No. 1SS3259				
28S/9992525	A32/B12	Screw, rd. hd., 4 BA	4	—	C	
28W/9419465	SP13/B	Washer, 4 BA	4	—	C	
	1F9877	RIB, STATION 14.91, PORT, GROUP	1	—	MR	MD1/23
	2F9877	RIB, STATION 14.91, STARBOARD,	1	—	MR	MD1/24
		Spares for:—				
20887	18F9877	Bracket, attachment	1	L72	MR/C	MD1/25
	9F9877	Panel, access	1	L72	MR	MD1/26
		Attachments—Access Panel, Part No. 9F9877				
28D/9140202	AS1246/1C	Bolt, rd. hd., 2 BA	18	—	C	

Ref. No.	Part No.	Description (1 2 3 4)	No. off	Matl. Spec.	Cl. of St. M.R.	Plate and Illust'n No.
		EDGE, TRAILING, PORT AND STARBOARD, GROUP (1 & 2F9723) (Cont'd)				
	1F9878	**RIB, STATION 29·81, PORT, GROUP**	1	—	MR	MD1/27
	2F9878	**RIB, STATION 29·81, STARBOARD, GROUP**				MD1/28
		Spares for :—				
	20F9878	**Bracket,** attachment	1	L72	MR	MD1/29
	1F9879	**RIB, STATION 44·72, PORT, GROUP**	1	—	MR	MD1/30
	2F9879	**RIB, STATION 44·72, STARBOARD, GROUP**	1	—	MR	MD1/31
		Spares for :—				
	21F9879	**Bracket,** attachment	1	L72	MR	MD1/32
	1F9880	**RIB, CENTRE HINGE, INBOARD AILERON, PORT, GROUP** ...	1	—	MR	MD3/33
	2F9880	**RIB, CENTRE HINGE, INBOARD AILERON, STARBOARD, GROUP**				MD3/34
		Spares for :—				
20859	31F9880	**Angle**	2	L72	MR	MD3/35
	7F9880	**Bracket,** hinge	1	L65		
		Attachments Hinge Bracket, Part No. 7F9880				
28D/1213569	A60/7J	**Bolt,** ⅜" BSF	8	—	C	
28D/1213570	A60/8J	**Bolt,** ½" BSF	8	—	C	
28M/4199603	A58/JT	**Nut,** thin, ⅜" BSF	16	—	C	
	30F9880	**Washer,** special	16	—	C	
28W/9419456	SP10/J	**Washer,** ⅜"	16	—		
20858	47F9723	**Bracket,** stringer	2	L72	C	MD3/36
20845	48F9723	**Bracket,** stringer	2	L72	C	MD3/37
20854	10F9880	**Bracket,** stringer, port	5	L72	C	MD3/38
20860	9F9880	**Bracket,** stringer, starboard	5	L72	C	MD3/39
20855	25F9880	**Bracket,** stringer	6	L72	C	MD3/40
20856	26F9880	**Bracket,** stringer	6	L72	C	MD3/41
20857	28F9880	**Bracket,** stringer, port	1	L72	C	MD3/42
20861	27F9880	**Bracket,** stringer, starboard	1	L72	C	MD4/43
	1F9881	**RIB, STATION 76·81, PORT, GROUP**	1	—	MR	MD1/44
	2F9881	**RIB, STATION 76·81, STARBOARD, GROUP**	1	—	MR	MD1/45
		Spares for :—				
	17F9881	**Bracket,** attachment	1	L72	MR	MD1/46
	1F9882	**RIB, STATION 93·375, PORT, GROUP**	1	—	MR	MD1/47
	2F9882	**RIB, STATION 93·375, STARBOARD, GROUP**	1	—	MR	MD1/48
		Spares for :—				
	17F9882	**Bracket,** attachment	1	—	MR	MD1/49
	1F9883	**RIB, STATION 109·94, PORT, GROUP**	1	—	MR	MD1/50
	2F9883	**RIB, STATION 109·94, STARBOARD, GROUP**	1	—	MR	MD1/51
		Spares for :—				
	17F9883	**Bracket,** attachment	1	L72	MR	MD1/52

MAINPLANES

OUTER MAINPLANES

Ref. No.	Part No.	Description (1 2 3 4)	No. off	Matl. Spec.	Cl. of St. M.R.	Plate and Illust'n No.
		EDGE, TRAILING, PORT AND STARBOARD, GROUP (1 & 2F9723) (Cont'd)				
	1F9884	**RIB, CENTRE HINGE, STATION 126·5, PORT, GROUP**	1	—	MR	MD3/53
	2F9884	**RIB, CENTRE HINGE, STATION 126·5, STARBOARD, GROUP**	1	—	MR	MD3/54
		Spares for :—				
	6F9884	**BRACKET, ATTACHMENT, GROUP**	1	—	MR	MD3/55
	7F9884	**Bracket,** hinge	1	L65	MR	
		Attachments—Hinge Bracket, Part No. 7F9884				
28D/1212319	A60/6E	**Bolt,** ¼" BSF	4	—	C	
28D/1212320	A60/7E	**Bolt,** ¼" BSF	8	—	C	
	A58/ET	**Nut,** thin, ¼" BSF	12	—		
28W/9419487	SP16/E	**Washer,** ¼"	12	—	C	
28W/9418921	SP13/E	**Washer,** ¼"	8	—	C	
28W/9418920	SP10/F	**Washer,** ¼"	4	—	C	
20858	47F9723	**Bracket,** stringer	4	L72	C	MD3/56
20845	48F9723	**Bracket,** stringer	6	L72	C	MD3/57
	43F9723	**Bracket,** stringer	3	L72	MR	
	44F9723	**Bracket,** stringer	3	L72	MR	
	45F9723	**Bracket,** stringer	3	L72	MR	
	46F9723	**Bracket,** stringer	3	L72	MR	
8864	21F9884	**Plate,** cover	1	L72	C	MD3/58
		Attachments—Hinge Rib, Part No, 1 & 2F9884				
28D/1213569	A60/7J	**Bolt,** ⅜" BSF	4	—	C	
28D/1213568	A60/6J	**Bolt,** ⅜" BSF	4	—	C	
	A59/27J	**Bolt,** ⅜" BSF	4	—		
28M/4199603	A58/JT	**Nut,** thin, ⅜" BSF	8	—	C	
28M/1011473	A27/JP	**Nut,** ⅜" BSF	4	—	C	
28W/9419466	SP13/J	**Washer,** ⅜"	12	—	C	
	34F9702	**Washer,** special	12	—		
	1F9885	**RIB, STATION, 140·368, PORT, GROUP**	1	—	MR	MD1/59
	2F9885	**RIB, STATION 140·368, STARBOARD, GROUP**	1	—	MR	MD1/60
		Spares for :—				
	5F9892	**Bracket,** attachment	1	L72	MR	MD1/61
	1F9886	**RIB, STATION 154·237, PORT, GROUP**	1	—	MR	MD1/62
	2F9886	**RIB, STATION 154·237, STARBOARD, GROUP**	1	—	MR	MD1/63
		Spares for :—				
	5F9892	**Bracket,** attachment	1	L72	MR	MD1/64
	1F9887	**RIB, STATION 168·105, PORT, GROUP** ...	1	—	MR	MD1/65
	2F9887	**RIB, STATION 168·105, STARBOARD, GROUP**	1	—	MR	MD1/66
		Spares for :—				
	5F9892	**Bracket,** attachment	1	L72	MR	MD1/67

Ref. No.	Part No.	Description (1 2 3 4)	No. off	Matl. Spec.	Cl. of St. M.R.	Plate and Illust'n No.
		EDGE, TRAILING, PORT AND STBD., GROUP (1 & 2F9723) (Cont'd)				
	1F9888	**RIB, STATION 181·974, PORT, GROUP**	1	—	MR	MD1/68
	2F9888	**RIB, STATION 181·974, STARBOARD, GROUP**	1	—	MR	MD1/69
		Spares for :—				
	15F9888	**Bracket,** attachment, port	1	L72	MR	MD1/70
20846	16F9888	**Bracket,** attachment, starboard	1	L72	C	MD1/71
	1F9889	**RIB, CENTRE HINGE, OUTBOARD AILERON, PORT, GROUP**	1	—	MR	MD2/72
	2F9889	**RIB, CENTRE HINGE, OUTBOARD AILERON, STARBOARD, GROUP**	1	—	MR	MD2/73
		Spares for :—				
20847	15F9889	**Bracket**	1	L72	C	MD2/74
20848	16F9889	**Bracket**	1	L72	C	MD2/75
20852	17F9889	**Bracket**	3	L72	C	MD2/76
20849	18F9889	**Bracket**	3	L72	C	MD2/77
20850	19F9889	**Bracket**	1	L72	C	MD2/78
20853	20F9889	**Bracket**	1	L72	C	MD2/79
	7F9889	**Bracket,** hinge	1	L65	MR	
		Attachments—Hinge Bracket Part No. 7F9889				
28D/1213557	A60/12G	**Bolt,** $\frac{5}{16}$" BSF	2	—	C	
28D/1213559	A60/14G	**Bolt,** $\frac{5}{16}$" BSF	2	—	C	
28D/1213560	A60/16G	**Bolt,** $\frac{5}{16}$" BSF	2	—	C	
28D/1213561	A60/18G	**Bolt,** $\frac{5}{16}$" BSF	2	—	C	
28M/4199618	A58/GT	**Nut,** thin, $\frac{5}{16}$" BSF	8	—	C	
28W/9419403	SP13/G	**Washer,** $\frac{5}{16}$"	8	—	C	
	35F9702	**Washer,** special, $\frac{5}{16}$"	8	—	MR	
20851	21F9889	**BRACKET, SHROUD, GROUP** ...	2	—	C	MD2/80
		Attachments—Hinge Rib, Part No. 1 & 2F9889				
28D/1213575	A60/13J	**Bolt,** $\frac{3}{8}$" BSF	2	—	C	
28D/1213576	A60/18J	**Bolt,** $\frac{3}{8}$" BSF	2	—	C	
28D/1213620	A60/15L	**Bolt,** $\frac{7}{16}$" BSF	2	—	C	
	A60/17L	**Bolt,** $\frac{7}{16}$" BSF	2	—		
28M/4199603	A58/JT	**Nut,** thin, $\frac{3}{8}$" BSF	4.	—	C	
28M/4199639	A58/LT	**Nut,** thin, $\frac{3}{8}$" BSF	4	—	C	
28W/9419466	SP13/J	**Washer,** $\frac{3}{8}$"	4	—	C	
28W/9419467	SP13/L	**Washer,** $\frac{7}{16}$"	4	—	C	
	34F9702	**Washer,** special, $\frac{3}{8}$"	4	—		
	26F7761	**Washer,** special, $\frac{7}{16}$"	4	—		
	1F9890	**RIB, STATION 211·5 PORT AND STARBOARD, GROUP**	1	—	MR	MD1/81
		Spares for :—				
	5F9892	**Bracket,** attachment	1	L72	MR	MD1/82
	1F9891	**RIB, STATION 225·5, PORT AND STARBOARD, GROUP**	1	—	MR	MD1/83
		Spares for :—				
	5F9892	**Bracket,** attachment	1	L72	MR	MD1/84

MAINPLANES

OUTER MAINPLANES

Ref. No.	Part No.	Description (1 2 3 4)	No. off	Matl. Spec.	Cl. of St. M.R.	Plate and Illust'n No.
		EDGE, TRAILING, PORT AND STBD., GROUP (1 & 2F9723) (Cont'd)				
	1F9892	**RIB, STATION 239·5, PORT AND STARBOARD, GROUP**	1	—	MR	MD1/85
		Spares for :—				
	5F9892	**Bracket,** attachment	1	L72	MR	MD1/86
	1F9876	**RIB, HINGE, OUTBOARD AILERON, PORT AND STARBOARD, GROUP**	1	—	MR	MD2/87
		Spares for :—				
	7F9876	**Angle**	1	L72	MR	MD2/88
	8F9876	**Angle**	1	L72	MR	MD2/89
	4F9876	**Bracket,** attachment	1	L72	MR	MD2/90
	5F9876	**Bracket,** hinge	1	L65	MR	
		Attachments—Hinge Bracket Part No. 5F9876				
28D/1212317	A60/4E	**Bolt,** ¼" BSF	4	—	C	
28D/1212319	A60/6E	**Bolt,** ½" BSF	4	—	C	
28M/1011475	A27/EP	**Nut,** ¼" BSF	8	—	C	
28W/9418921	SP13/E	**Washer,** ¼"	8	—	C	
28W/9419405	SP15/E	**Washer,** ½"	2	—	C	
28W/9419487	SP16/E	**Washer,** ¼"	6	—	C	
	11F9876	**Plate,** reinforcing	1	L72	MR	MD1/91
		Attachments—Ribs, Part Nos. 1 & 2F9877, 1 & 2F9878, 1 & 2F9879, 1 & 2F9881, 1 & 2F9882, 1 & 2F9883, 1 & 2F9885, 1 & 2F9886, 1 & 2F9887, 1 & 2F9888, 1 & 2F9890, 1F9891, and 1F9892				
28D/9133012	A25/3C	**Bolt,** 2 BA	78	—	C	
28M/1006473	A27/CT	**Nut,** thin, 2 BA	78	—	C	
28W/9419402	SP13/C	**Washer,** 2 BA	78	—	C	
	1F9851	**SPAR, REAR, PORT, GROUP**	1	—	MR	
	2F9851	**SPAR, REAR, STARBOARD, GROUP**	1	—	MR	
		Spares for :—				
	3F9851	**Boom,** top, port	1	L65	MR	
	4F9851	**Boom,** top, starboard	1	L65	MR	
	5F9851	**Boom,** bottom, port	1	L65	MR	
	6F9851	**Boom,** bottom, starboard	1	L65	MR	
	21F9851	**Bracket,** attachment, port	1	—	MR	
	22F9851	**Bracket,** attachment, starboard	1	—	MR	
	23F9851	**Bracket,** attachment	7	—	MR	
	25F9851	**Bracket,** attachment	16	—	MR	
	35F9851	**Bracket,** attachment	1	—	MR	
	36F9851	**Bracket,** attachment	1	—	MR	
	37F9851	**Bracket,** attachment	1	—	MR	
	38F9851	**Bracket,** attachment	1	—	MR	
	45F9851	**Bracket,** attachment	1	—	MR	
	46F9851	**Bracket,** attachment	1	—	MR	
	47F9851	**Bracket,** attachment	7	—	MR	
	48F9851	**Bracket,** attachment	7	—	MR	
	49F9851	**Bracket,** attachment	4	—	MR	
	50F9851	**Bracket,** attachment	4	—	MR	

Ref. No.	Part No.	Description (1 2 3 4)	No. off	Matl. Spec.	Cl.of St. M.R.	Plate and Illust'n No.
		SPAR, REAR, PORT AND STARBOARD, ... GROUP (1 & 2F9851) (Cont'd)				
	53F9851	Bracket, attachment	1	—	MR	
	54F9851	Bracket, attachment	1	—	MR	
	55F9851	Bracket, attachment	1	—	MR	
	56F9581	Bracket, attachment	1	—	MR	
	61F9851	Bracket, attachment, port	1	—	MR	
	62F9851	Bracket, attachment, starboard	1	—	MR	
	63F9851	Bracket, attachment, port	1	—	MR	
	64F9851	Bracket, attachment, starboard	1	—	MR	
	65F9851	Bracket, attachment, port	1	—	MR	
	66F9851	Bracket, attachment, starboard	1	—	MR	
	67F9851	Bracket, attachment, port	1	—	MR	
	68F9851	Bracket, attachment, starboard	1	—	MR	
	98F9851	Bracket, attachment	1	—	MR	
	99F9851	Bracket, attachment	1	—	MR	
	104F9851	Bracket, attachment	1	—	MR	
	105F9851	Bracket, attachment	1	—	MR	
	106F9851	Bracket, attachment	1	—	MR	
	107F9851	Bracket, attachment	1	—	MR	
	109F9851	Bracket, attachment	1	—	MR	
	110F9851	Bracket, attachment	1	—	MR	
	111F9851	Bracket, attachment	1	—	MR	
	112F9851	Bracket, attachment	1	—	MR	
	24F9893	Bracket, attachment	1	—	MR	
	25F9893	Bracket, attachment	1	—	MR	
	45F10996	Bracket, attachment	1	—	MR	
	46F10996	Bracket, attachment	1	—	MR	
	1F9937	Bracket, attachment	1	—	MR	
		Attachments—Attachment Brackets				
28D/1215660	A59/4C	Bolt, 2 BA	2	—	C	
28D/1212318	A60/5E	Bolt, 1/4" BSF	4	—	C	
28D/1213589	A59/9E	Bolt, 1/4" BSF	8	—	C	
28D/1213610	A59/10G	Bolt, 5/16" BSF	1	—	C	
28D/1213609	A59/9G	Bolt, 5/16" BSF	17	—	C	
28D/1212342	A60/5G	Bolt, 5/16" BSF	2	—	C	
	91F9893	Bolt, special, 7/8" BSF	4	—		
	96F9651	Bolt, special, 3/4" BSF	4	—		
	89F9851	Bolt, special, 3/4" BSF	4	—		
28M/1012015	AGS2001/C1/66	Nut, stiff, 2BA	2	—	C	
28M/1011475	A27/EP	Nut, 1/4" BSF	8	—	C	
	A58/ET	Nut, thin, 1/4" BSF	4	—		
28M/1006939	A27/GP	Nut, 5/16" BSF	18	—	C	
28M/4199618	A58/GT	Nut, thin, 5/16" BSF	2	—	C	
28M/4199664	A27/UC	Nut, castellated, 7/8" BSF	4	—	C	
28M/4199648	A27/SC	Nut, castellated, 3/4" BSF	4	—	C	
	A24/SC	Nut, castellated, 3/4" BSF	4	—		
28P/1221025	SP90/H16	Pin, cotter, split	12	—	C	
28W/9419475	SP15/C	Washer, 2 BA	2	—	C	
28W/9418920	SP10/E	Washer, 1/4"	4	—	C	

Ref. No.	Part No.	Description (1 2 3 4)	No. off	Matl. Spec.	Cl. of St. M.R.	Plate and Illust'n No.
		Attachments—Attachment Brackets (Cont'd.)				
28W/9418921	SP13/E	Washer, 1/4"	8	—	C	
28W/9419455	SP10/G	Washer, 5/16"	2	—	C	
28W/9419403	SP13/G	Washer, 5/16"	18	—	C	
28W/9419429	SP13/U	Washer, 7/8"	4	—	C	
3871	19F7756	Washer, special, 7/8"	4	—		
28W/9419471	SP13/S	Washer, 3/4"	4	—	C	
28W/9419494	SP16/S	Washer, 3/8"	4	—	C	
3873	28F7753	Washer, special	2	—		
	1F9853	WEB, REAR SPAR, PORT, GROUP	1	—	MR	
	2F9853	WEB, REAR SPAR, STARBOARD, GROUP	1	—	MR	
5L/9959801		Filament	1	—	C	
5CX/4330334		Lamp	1	—	A	
		Attachments—Lamp, Part No. 5CX4515				
28D/1007976	AS1242/4C	Bolt, csk. hd., 2 BA	11	—	C	
28M/1012015	AGS2001/C1/66	Nut, stiff, 2 BA	11	—	C	
28W/9419402	SP13/C	Washer, 2 BA	11	—	C	
		SKIN, BOTTOM, OUTER WING, PORT AND STARBOARD (1 & 2F9706)				
		Spares for:—				
11978	9F10225	PANEL, LANDING LIGHT, PORT GROUP (Mod. 1321)	1	—		MD3/92
		Spares for:—				
11981	8F10225	PANEL, GROUP	1	—		MD3/93
	7F10225	Panel, access	1	DTD687	MR	MD3/94
		Attachments—Access Panel, Part No. 7F10225				
	1C.SS4698	Bolt, 2 BA	3	—		
	10F10225	Ring, mounting	1	L72		
		Attachments—Mounting Ring, Part No. 10F10225				
	5SS4199	Bolt, csk. hd.	11	—	MR	MD3/95
28M/1012015	AGS2001/C1/66	Nut, stiff, 2 BA	10	—	C	
28M/9433473	AGS2002/C/1	Nut, stiff, 2 BA	1	—	C	
28W/9419402	SP13/C	Washer, 2 BA	10	—	C	
28W/9419454	SP10/C	Washer, 2 BA	1	—	C	
		Attachments—Landing Light Panel, Part No. 9F10225				
1433762	2C.SS4698	Bolt, rd. hd., 2 BA	23	—		
11977	8F10224	PANEL, LANDING LIGHT, STARBOARD, GROUP (Mod. 1321)	1	—		MD3/96
		Spares for:—				
11979	9F10224	PANEL, GROUP	1	—		MD3/97
11980	7F10224	Panel, access	1	DTD687		MD3/98
		Attachments—Access, Panel, Part No. 7F10224				
	1C.SS4698	Bolt, 2 BA	3	—		

Ref. No.	Part No.	Description (1 2 3 4)	No. off	Matl. Spec.	Cl. of St. / M.R.	Plate and Illust'n No.
		PANEL, LANDING LIGHT, STARBOARD, GROUP (8F10224) (Cont'd)				
7198	3F10224	Ring, mounting	1	L72		MD3/99
		Attachments- Mounting Ring, Part No. 3F10224				
	5SS4199	Bolt, csk. hd. 2 BA	11	–	MR	MD3/100
28M/1012015	AGS2001/C1/66	Nut, stiff, 2 BA	11	–	C	
28W/9419402	SP13/C	Washer, 2 BA	11	–	C	
		Attachments—Landing Light Panel, Part No. 8F10224				
1433762	2C.SS4698	Bolt, rd. hd., 2 BA	26	–		

MAINPLANES

OUTER MAINPLANES

Ref. No.	Part No.	1 2 3 4	Description	No. off	Matl. Spec.	Cl. of St. / M.R.	Plate and Illust'n No.

Ref. No.	Part No.	Description 1 2 3 4	No. off	Matl. Spec.	Cl. of St. M.R.	Plate and Illust'n No.
		COMPLEMENTARY ITEMS				
		ATTACHMENT FITTING, WING TIP TO OUTER MAINPLANE (F9910) Consisting of:–				
	3SS4353	Bolt, csk hd. 2 BA	6	–	MR	MD3/101
	5SS4353	Bolt, csk. hd. 2 BA	134	–	MR	MD3/102
28M/4095809	AGS2001/L/1	Nut, stiff, 7/16" BSF	8	–	C	
6531	165F9857	Stud, top and bottom boom, rear	2	S96	C	MD3/103
6530	166F9857	Stud, top and bottom boom, front	2	S96	C	MD3/104
28W/9419478	SP15/L	Washer, 7/16"	8	–	C	
		ATTACHMENT FITTINGS, INBOARD AILERON POWER UNIT FAIRING TO OUTER MAINPLANE, PORT AND STARBOARD (1 & 2F9908) Consisting of:–				MD4/105
21020	29F9908	Angle, aft of forward fairing, port	1	L72	C	MD4/106
21026	30F9908	Angle, aft of forward fairing, starboard	1	L72	C	MD4/107
21018	49F9908	Angle, fixed centre fairing, port	1	L72	C	MD4/108
21024	48F9908	Angle, fixed centre fairing, starboard	1	L72	C	MD4/109
21019	31F9908	Diaphragm, port and starboard	1	L72	C	MD4/110
	25F9908	Fairing, fixed, forward, port	1	L72	MR	MD4/111
	26F9908	Fairing, fixed, forward, starboard	1	L72	MR	MD4/112
6508	45F9908	FAIRING, DETACHABLE PORTION, CENTRE, PORT, GROUP	1	–	C	MD4/113
6509	44F9908	FAIRING, DETACHABLE PORTION, CENTRE, STARBOARD, GROUP	1	–	C	MD4/114
		Spares for:–				
	64F9908	Angle, port	1	L72	C	MD4/115
21025	68F9908	Angle, starboard	1	L72	C	MD4/116
28FP/736	DZUS EF5/40A	Fastener	16	–	C	
28FP/4062656	DZUS EF5/35A	Fastener	12	–	C	
	37F9908	Packing, port	1	L72		
	36F9908	Packing, starboard	1	L72		
21021	61F9908	Piece, extension, port	1	L72	C	MD4/117
21028	60F9908	Piece, extension, starboard	1	L72	C	MD4/118
21022	63F9908	Plate, joint, port	1	L72	C	MD4/119
21029	62F9908	Plate, joint, starboard	1	L72	C	MD4/120
	404SS4141	Rivet, csk. hd.	58	–	MR	MD4/121
8687	405SS4141	Rivet, csk. hd.	18	–	C	MD4/122
	3SS3791	Rivet, pop, csk. hd.	139	–	MR	MD4/123
	4SS3791	Rivet, pop, csk. hd.	2	–	MR	MD4/124
	7SS3791	Rivet, pop, csk. hd.	20	–	MR	MD4/125
28Q/9417225	AGS2050/424	Rivet, pop, dome hd.	10	–	C	
28Q/9129594	AS2030/405	Rivet, csk. hd.	32	–	C	
28Q/9129592	AS2030/404	Rivet, csk. hd.	24	–	C	
28FP/341	DZUS S5/325	Spring	28	–	C	
	55F9908	Strap, butt, port	1	L72	C	MD4/126
21027	54F9908	Strap, butt, starboard	1	L72	C	MD4/127

Ref. No.	Part No.	Description (1 2 3 4)	No. off	Matl. Spec.	Cl. of St. M.R.	Plate and Illust'n No.
		COMPLEMENTARY ITEMS (Cont'd)				
		ATTACHMENT FITTINGS, OUTBOARD AILERON POWER UNIT FAIRING TO OUTER MAINPLANE, PORT AND STARBOARD (1 & 2F9909)				MD4/128
		Consisting of :—				
	35F9909	**Angle,** aft forward fairing, port	1	L72		
	36F9909	**Angle,** aft forward fairing, starboard ...	1	L72		
21030	53F9909	**Angle,** fixed, centre fairing, inboard, port	1	L72	C	MD4/129
17378	54F9909	**Angle,** fixed, centre fairing, inboard, starboard	1	L72	C	MD4/130
	55F9909	**Angle,** fixed, centre fairing, outboard, port	1	L72		MD4/131
21036	56F9909	**Angle,** fixed, centre fairing, outboard, starboard	1	L72	C	MD4/132
	38F9909	**Diaphragm,** port and starboard	1	L72		MD4/133
6512	27F9909	**Fairing,** forward, port	1	L72	C	MD4/134
6513	28F9909	**Fairing,** forward, starboard	1	L72	C	MD4/135
6514	31F9909	**FAIRING, DETACHABLE PORTION, CENTRE, PORT, GROUP**	1	—	C	MD4/136
6515	32F9909	**FAIRING, DETACHABLE PORTION, CENTRE, STARBOARD, GROUP**	1	—	C	MD4/137
28FP/736	DZUS EF5/40A	**Fastener**	30	—	C	
	41F9909	**Packing,** port	1	L72		
	42F9909	**Packing,** starboard	1	L72		
21031	65F9909	**Piece,** extension, port	1	L72	C	MD4/138
21034	66F9909	**Piece,** extension, starboard	1	L72	C	MD4/139
	404SS4141	**Rivet,** csk. hd.	25	—	MR	MD4/140
	4SS3791	**Rivet,** pop, csk. hd.	120	—	MR	MD4/141
	5SS3791	**Rivet,** pop, csk. hd.	1	—	MR	MD4/142
	8SS3791	**Rivet,** pop, csk. hd.	43	—	MR	MD4/143
28Q/9129594	AS2030/405	**Rivet,** csk. hd.	60	—	C	
28Q/9417225	AGS2050/424	**Rivet,** pop, dome hd.	22	—	C	
28FP/341	DZUS S5/325	**Spring**	30	—	C	
	49F9909	**Strap,** butt, port	1	L72		
	50F9909	**Strap,** butt, starboard	1	L72		
21032	67F9909	**Strip,** joint, port	1	L72	C	MD4/144
21035	68F9909	**Strip,** joint, starboard	1	L72	C	MD4/145

MAINPLANES

OUTER MAINPLANES

SUMMARY OF STANDARD ITEMS

Stores Ref.		No. off	Stores Ref.		No. off	Stores Ref.		No. off
Section	Ref. No.		Section	Ref. No.		Section	Ref. No.	
28D	1007976	11	28FP	341	58	28S	9992525	4
28D	1008161	2	28FP	4062656	12			
28D	1212317	4	28FP	736	46			
28D	1212318	4				28W	9418920	10
28D	1212319	8				28W	9418921	32
28D	1212320	8	28M	1278190	37	28W	9419402	126
28D	1212342	2	28M	10293	8	28W	9419403	26
28D	1213557	2	28M	9433973	1	28W	9419405	2
28D	1213559	2	28M	14015	2	28W	9419429	4
28D	1213560	2	28M	14440	28	28W	9419454	1
28D	1213561	2	28M	14877	10	28W	9419455	2
28D	1213658	4	28M	15496	4	28W	9419456	16
28D	1213569	12	28M	15814	4	28W	9419465	4
28D	1213570	8	28M	16830	4	28W	9419466	16
28D	1213575	2	28M	1006473	78	28W	9419467	4
28D	1213576	2	28M	1006939	18	28W	9419468	2
28D	1213589	8	28M	1011473	4	28W	9419471	4
28D	1213609	17	28M	1011475	26	28W	9419475	2
28D	1213610	1	28M	940520	13	28W	9419478	8
28D	1213620	2				28W	9419487	18
28D	1215660	2				28W	9419494	4
28D	1215686	4		PART No.				
28D	1215687	4		A24/SC	4			
28D	9133011	4		A58/ET	4			
28D	9133012	84						
28D	9140202	18						
28D	9436920	3	28P	20111	12			
28D	9709461	3	28P	20343	2			
			28Q	9129592	24			
	PART No.		28Q	9129594	92			
	A59/27J	4	28Q	9417225	32			
	A59/12N	2						
	A60/17L	2						

MAINPLANES

OUTER WING ARRANGEMENT & TRAILING EDGE

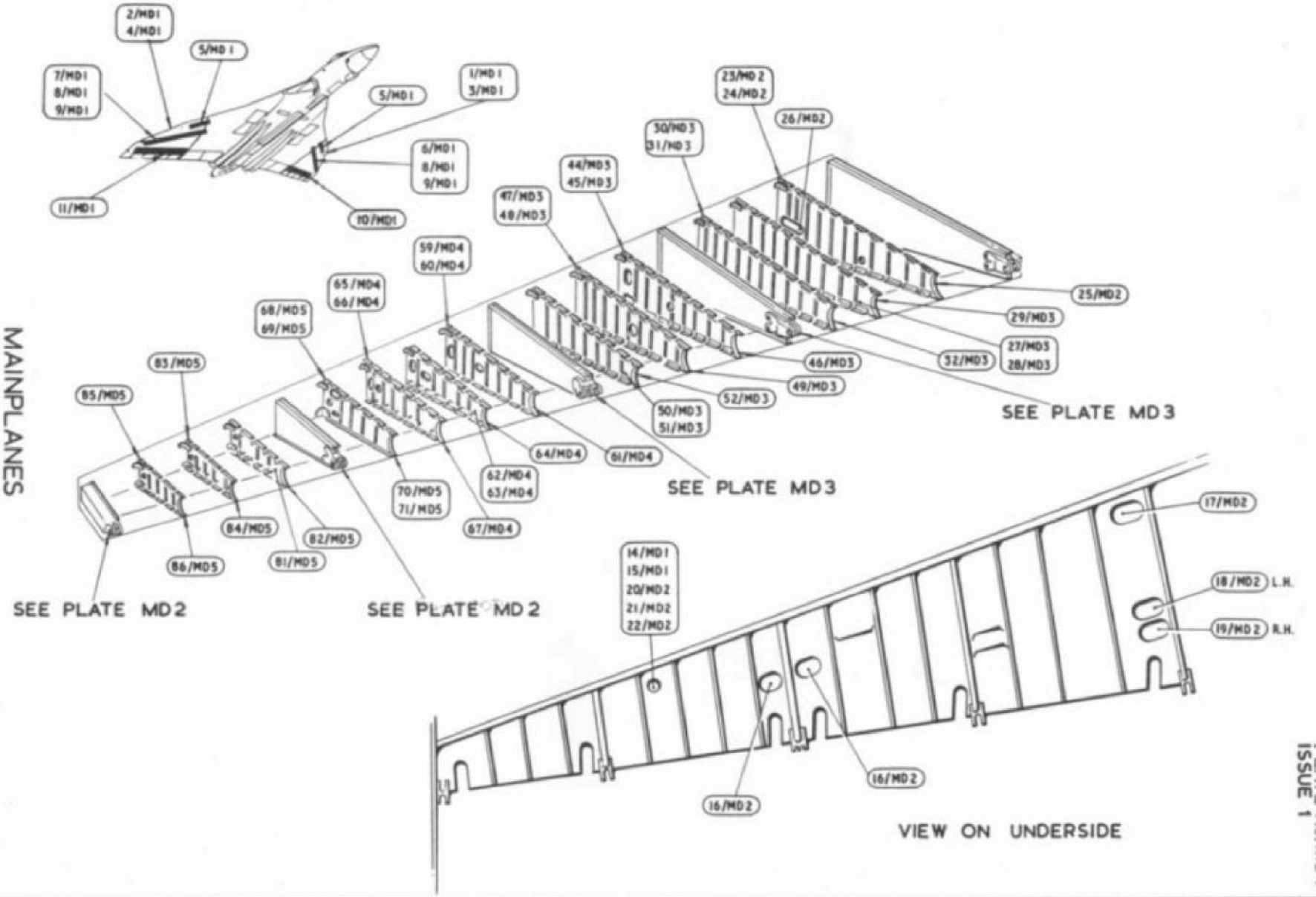

PLATE No. MD1
ISSUE 1

PLATE No MD2
ISSUE 1

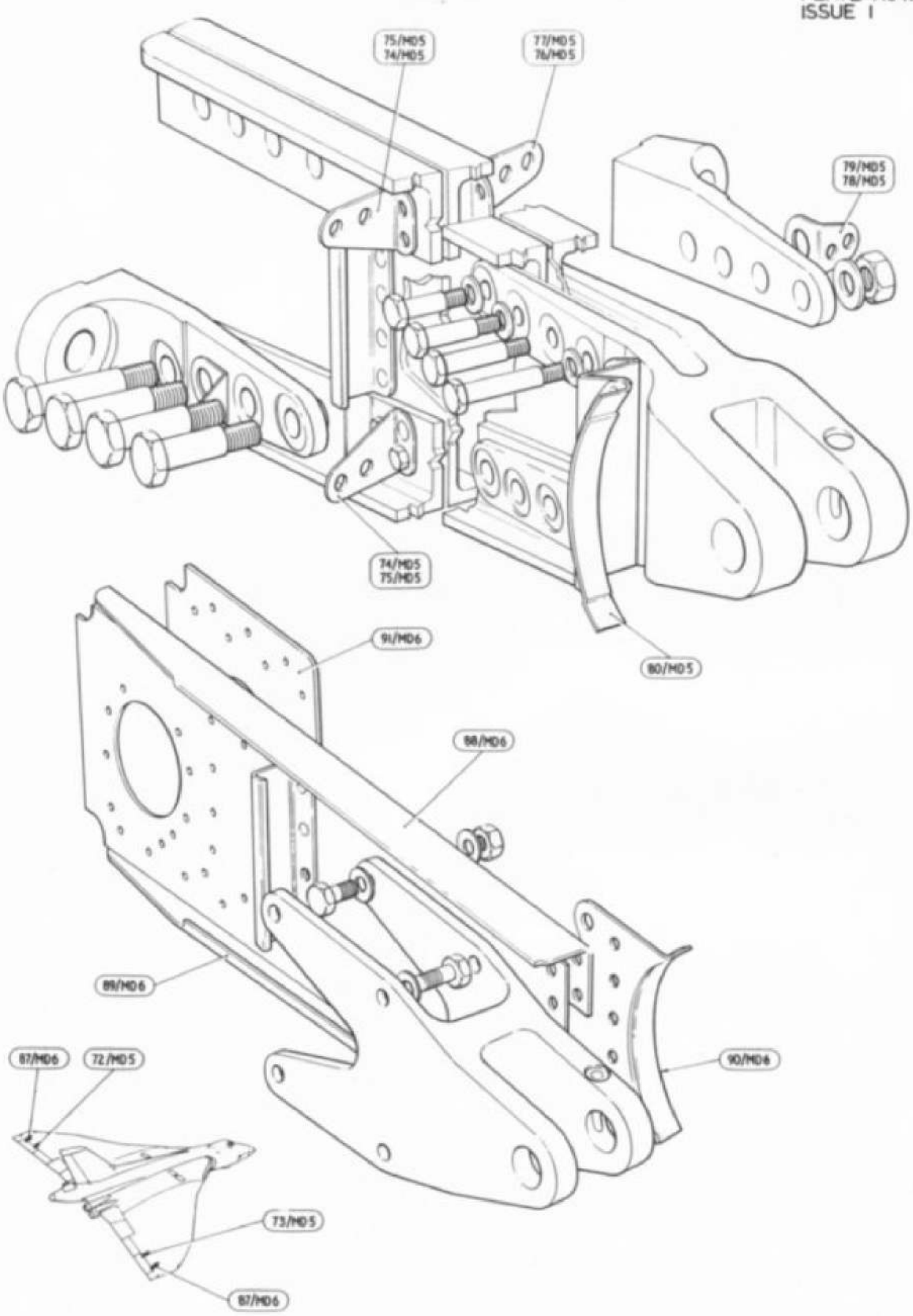

MAINPLANES

CENTRE HINGE RIBS, OUTBOARD

PLATE No MD3
ISSUE 1

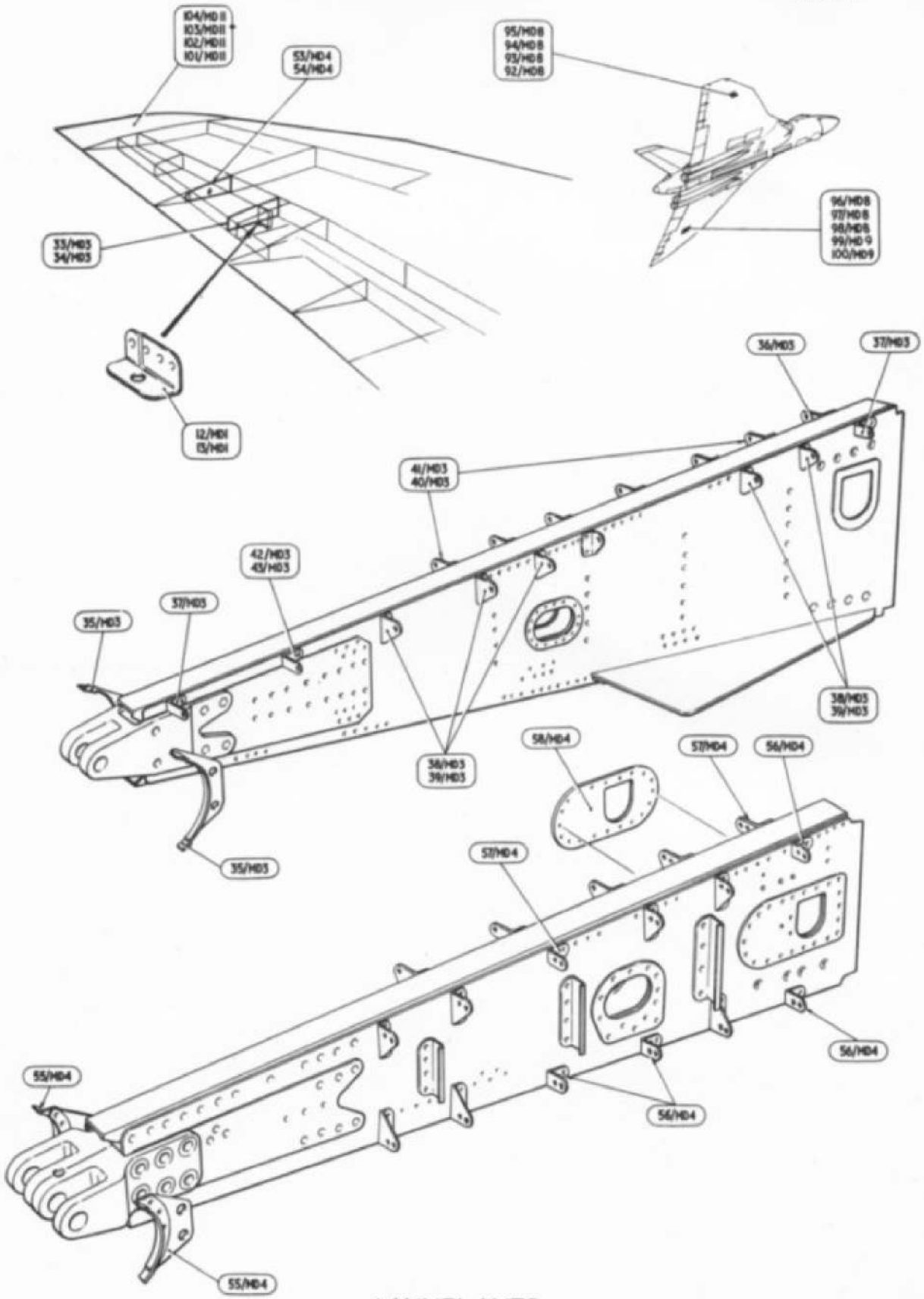

MAINPLANES

INBOARD, CENTRE HINGE RIBS, STN'S 60·25 & 126·5 & SKIN ARRANGEMENT

PLATE No.MD4
ISSUE 1

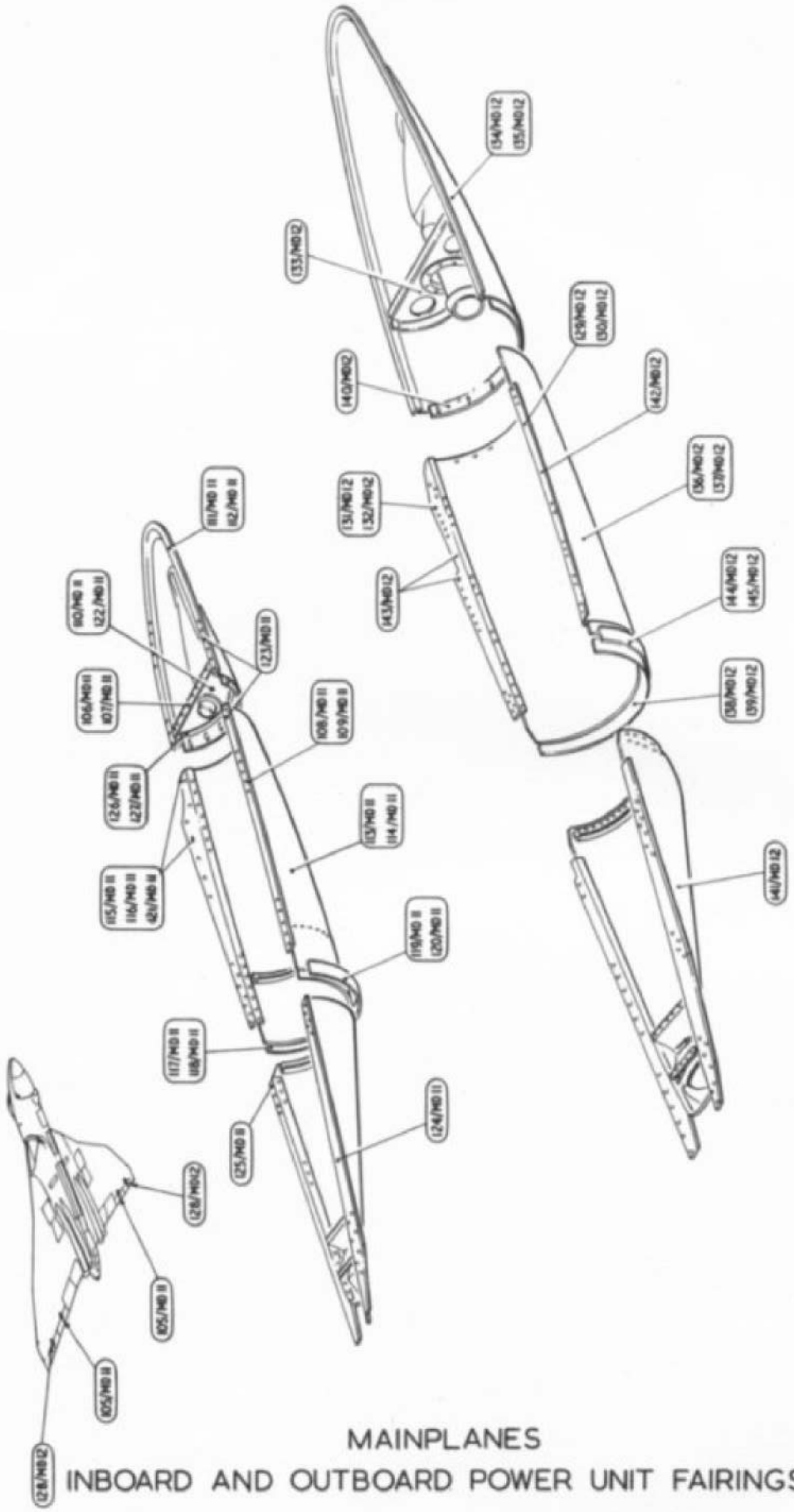

MAINPLANES
INBOARD AND OUTBOARD POWER UNIT FAIRINGS

This file was downloaded
from the RTFM Library.

Link: www.scottbouch.com/rtfm
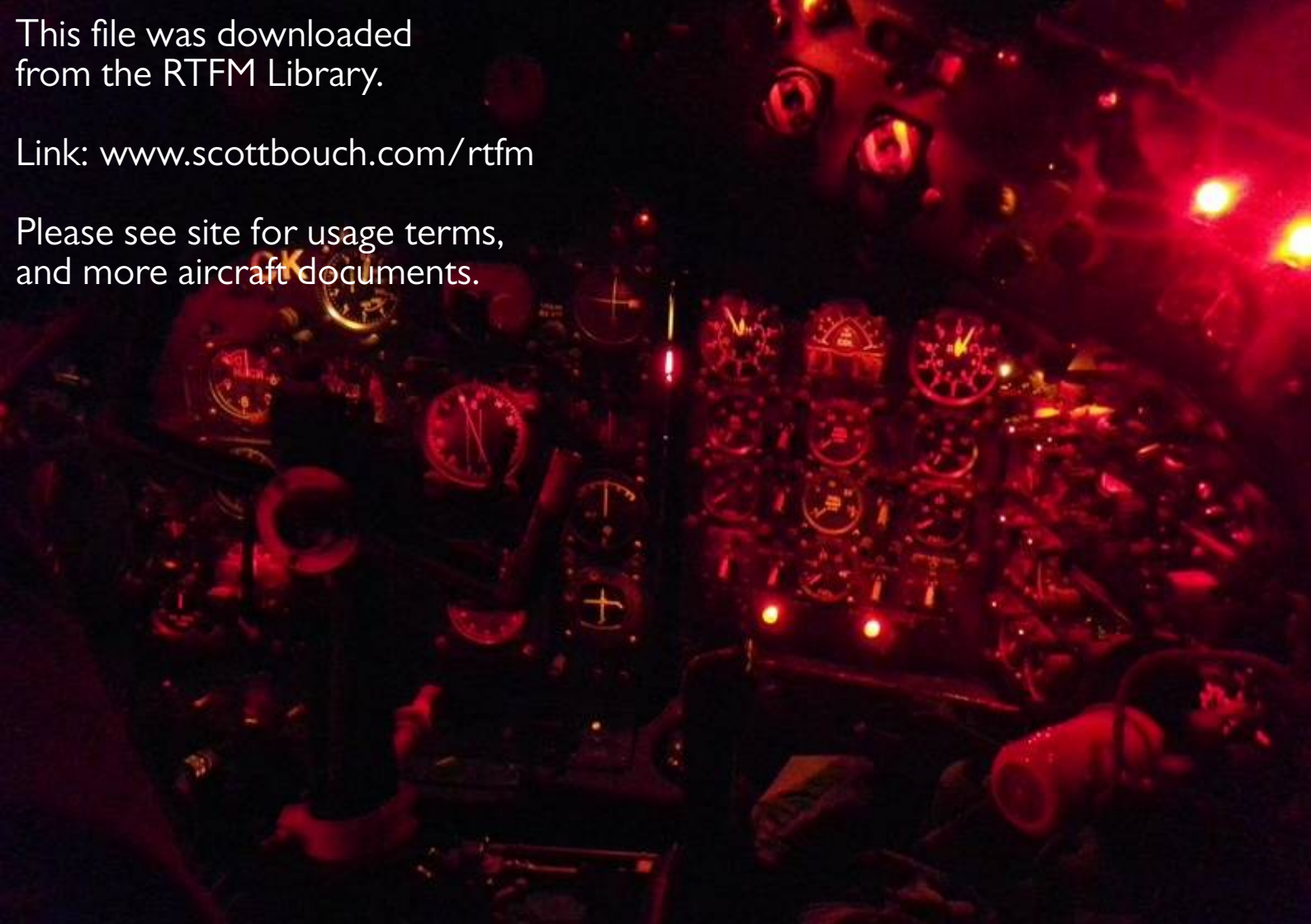
Please see site for usage terms,
and more aircraft documents.