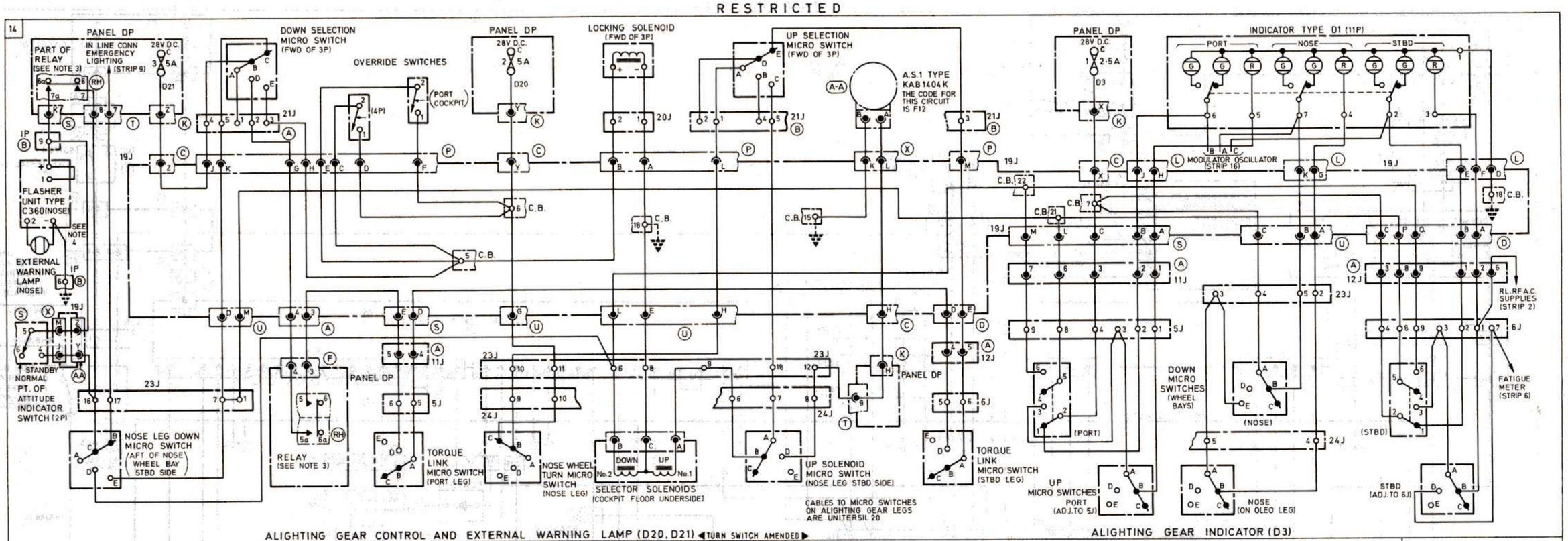


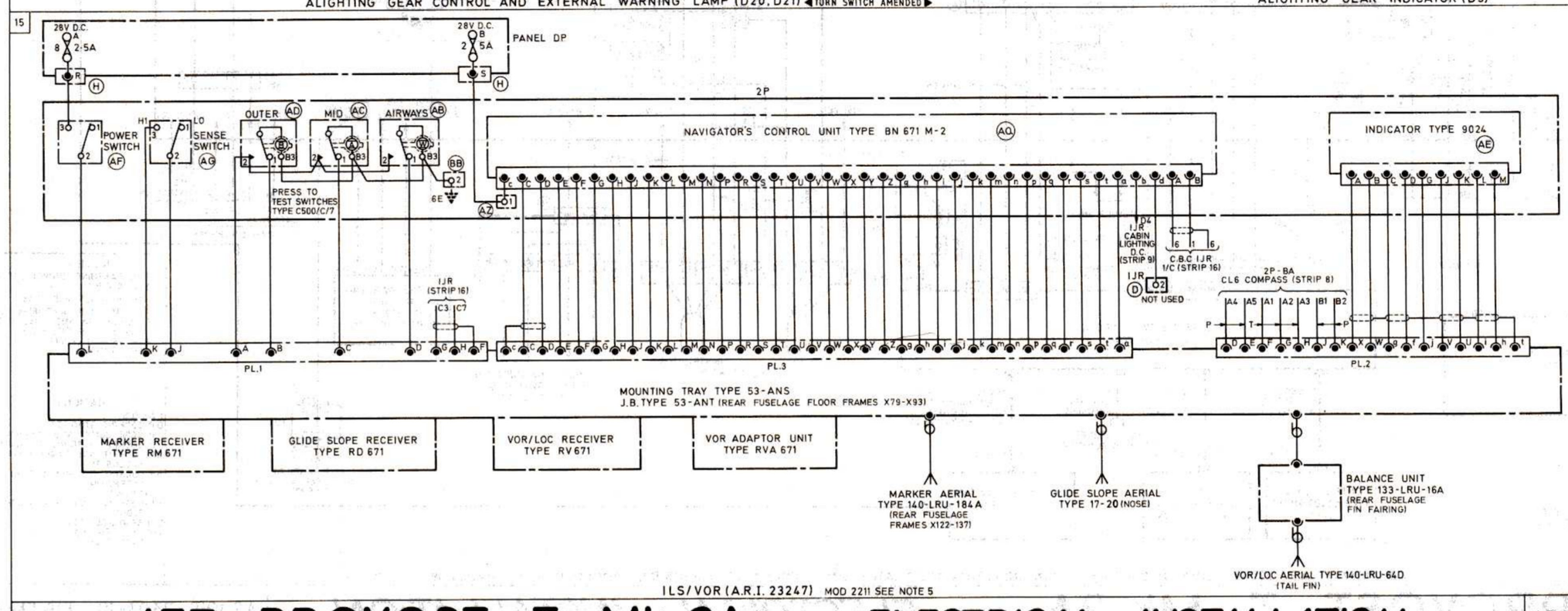


NOTES

1. ALL CABLES ON STRIP 14 ARE UNINYVIN 20 (6 AMP) UNLESS OTHERWISE STATED
2. FOR EARTHING SHOWN DOTTED SEE STRIP 12
3. RELAY RH. SEE AIRSPEED SWITCH CIRCUIT (STRIP 7)
4. FOR INTERNALS OF FLASHER UNIT SEE A.P. 113F-0605-13A
5. ON EMBODIMENT OF MOD 2211 THE GLIDESLOPE RECEIVER, VOR ADAPTER AND JB. BECOME MATCHED UNITS AND MUST BE CHANGED TOGETHER.

LOCATIONS

PANELS
DP - COCKPIT STBD
1P - NOSE COMPARTMENT AND BULKHEAD
2P - COCKPIT INSTRUMENT PANEL
3P - COCKPIT INST. PANEL PORT EXTENSION
4P - CENTRE PEDESTAL
11P - PORT INSTRUMENT PANEL

JUNCTIONS
1JR - PORT D SECTION
5J - PORT MAIN WHEEL BAY
6J - STBD MAIN WHEEL BAY
11J - PORT WING ROOT FWD. VENTRAL COMPT.
12J - STBD WING ROOT FWD. VENTRAL COMPT.
19J - FWD OF 2P
20J - FWD OF 4P
21J - FWD OF 3P
23J - COCKPIT FLOOR UNDERSIDE
24J - FRONT BULKHEAD