AP 113D-2007-1
4th Edition December 99
(Superseding 3rd Edition
dated Dec 93)

A321.

CABLE TERMINATIONS AND CRIMPING PROCESS INSTRUCTIONS (AMP)

GENERAL AND TECHNICAL INFORMATION (-1)

BY COMMAND OF THE DEFENCE COUNCIL

Ministry of Defence

Sponsored for use in the:
Royal Navy by DGA (N)
Army Service by DGES (A)
ROYAL AIR FORCE by DGSM (RAF)

Prepared by: Writing Agency
Publications Authority: Hd DCALD

Service Users should send their comments through
the channel prescribed for the purpose in:
Naval Aircraft Maintenance Manual (RN)
EMER Aircraft A040 (Army)
AP 100B-01 Order 0504 (RAF)

AMENDMENT RECORD

Amdt	Incorporated by	Date
1		
2		
3		
4		
5		
6		
7		
8		
9		
10		
11		
12		
13		
14		
15		
16		
17		
18		
19		
20		
21		
22		
23		
24		
25		
26		
27		
28		
29		
30		
31		
32		
33		
34		

Amdt	Incorporated by	Date
35		
36		
37		
38		
39		
40		
41		
42		
43		
44		
45		
46		
47		
48		
49		
50		
51		
52		
53		
54		
55		
56		
57		
58		
59		
60		
61		
62		
63		
64		
65		
66		
67		
68		

RECORD OF ADVANCE INFORMATION LEAFLETS (AIL)

AIL	Date Received	Deleted by Amdt or AIL

AIL	Date Received	Deleted by Amdt or AIL

AIL	Date Received	Deleted by Amdt or AIL

RECORD OF SERVICE TEMPORARY AMENDMENT LEAFLETS (STAL)

Identity *	Date received	Deleted by Amdt or AIL or STAL

Identity *	Date received	Deleted by Amdt or AIL or STAL

*Insert specific identity of STAL

CONTENTS

PRELIMINARY MATERIAL

Page

GENERAL AND TECHNICAL INFORMATION (-1)

Chapter

PREFACE

1 Each leaflet of this publication bears the date of initial issue. Subsequent amendments will bear the date and number of the amendment issued. New or amended technical matter will be indicated by black triangles positioned adjacent to the text thus (▸------◂) to show the extent of the amended text. If a chapter is re-issued in a completely revised form the black triangle will not be used; instead the words 'Completely revised' will appear at the head of the relevant chapter.

TECHNICAL ENQUIRIES

RN

Technical enquiries concerning terminations or termination tools should be directed to the following address:

DGA(N)ASE
Yeovilton L1.3
Yeovilton
Somerset
DA22 8HW

Telephone 0935 452363 for urgent enquiries only.

RAF

Technical enquiries concerning terminations should be directed to the following address:

SM (AV) 43 A2
Block 2
Government Buildings
St George's Road
Harrogate
HG2 9DB

Telephone MOD Harrogate, Ext 3803 for urgent enquiries only.

Technical enquiries concerning termination tools should be directed to the following address:

GDTIF
W & GSS
Men CSDE
RAF Swanton Morley
Dereham
Norfolk
NR20 4LJ

Telephone RAF Swanton Morley Ext 7319 for urgent enquiries only.

LIST OF ASSOCIATED PUBLICATIONS

Air Publications (AP) that have been prepared in support of AMP Crimped Terminations are listed below:

AP 120M-0612-1	Precision termination tools - control, maintenance and testing
AP 113D-1700-1	Cables, general use, aircraft and equipment

WARNINGS

CONTROL OF SUBSTANCES HAZARDOUS TO HEALTH (COSHH) REGULATIONS 1988.

MAKE SURE YOU KNOW THE SAFETY PRECAUTIONS AND FIRST AID INSTRUCTIONS BEFORE YOU USE A HAZARDOUS SUBSTANCE.

READ THE LABEL ON THE CONTAINER IN WHICH THE SUBSTANCE IS SUPPLIED.

READ THE DATA SHEET APPLICABLE TO THE SUBSTANCE.

OBEY LOCAL ORDERS AND REGULATIONS.

WARNINGS

(1) POISON. HYDRAULIC FLUID IS POISONOUS, AND WHEN LEAKING UNDER PRESSURE, CAN EASILY PENETRATE THE SKIN. DO NOT USE LEAKING CRIMPING TOOLS. DO NOT OPERATE A HYDRAULIC FOOT PUMP WITHOUT A CRIMPING HEAD BEING ATTACHED.

(2) CRUSHED FINGERS. KEEP HANDS CLEAR OF THE DIES WHEN PUMPING A HYDRAULIC CRIMPING TOOL TO ADVANCE THE RAM.

CAUTIONS

CAUTIONS

(1) When using hydraulic crimping tools, check that the yoke is closed and the latch pin is fully inserted before crimping otherwise damage to the dies will occur.

CHAPTER 1

CRIMPED TERMINATIONS, AMP

CONTENTS

Para

INTRODUCTION

1 This publication describes the various types of crimp cable terminations manufactured by AMP of GB Limited supplied for service use. Information for each termination is provided in separate chapters. Each chapter explains the appropriate crimping technique and provides full information in tabular form to enable selection of the required termination and the associated tooling.

TERMINATION CRIMPING

2 Crimping is a method of attaching a termination to an electrical cable. This is achieved by reshaping the metal barrel of the termination together with the cable conductor so that each strand of the conductor is deformed by contact with the barrel or another strand.

3 Unlike soldering techniques, the skill level required to form a satisfactory crimp joint is minimal, but the selection to the correct tool and termination for the cable insulation and conductor sizes is crucial. Failure to select the correct combination will result in an over or under crimped joint. Both are equally unsatisfactory.

JOINT INTEGRITY

4 Crimped processes used in the service must comply with Defence Standard 59-71, part of which requires a joint to be subjected to 1500 temperature cycles, during which a specified millivolt drop must not be exceeded and then to be tensile tested, i.e. pull off the joint. It is not unusual for a sample to fail the millivolt drop test but pass the tensile test. Therefore the tensile test of a crimp joint does not guarantee its electrical integrity; this can only be assured by careful selection as noted in Para 3.

CABLE SIZES

5 Each termination is designed to accommodate cable conductor sizes within a specified range. Often cables are not marked with the wire size. If this is the case conductors must be measured before the correct termination can be selected. For cable sizes outside the ranges quoted in the tables contact SM(AV)43A2 (see Technical Enquiries in the Preliminary pages).

CONDUCTOR SIZE MEASUREMENT

6 The only way to be certain of the conductor size is to measure it. Two methods are employed as follows:

6.1 Circular mil area (CMA). A circular mil is defined as the area of a circle 0.001 inch in diameter. A calculation of CMA using the following formula produces a value which is related to the cross sectional area of a conductor assuming that the strands are 'squeezed' to form a solid disc with no air spaces. The CMA is calculated by first measuring the diameter of a single strand of wire in a cable in thousandths of an inch and converting the result to mils (1 mil = 0.001 in). Then the strands are counted and the figures obtained are substituted in the following formula:

$$CMA = D \times D \times n$$

where D = strand diameter in mils
n = number of strands

6.2 Cross sectional area (CSA). The cross sectional area is calculated in square millimetres by measuring the strand diameter of a cable in millimetres, counting the number of strands and substituting in the following formula:

$$CSA = \frac{\pi \times d^2 \times n}{4} \quad mm^2$$

where $\pi = 3.14$
d = strand diameter in millimetres
n = number of strands

6.3 Calculation example. Consider a cable with 19 strands of wire, each 0.15 mm or 0.006 in. in diameter, then:

$$CMA = 6 \times 6 \times 19 = 684 \text{ circular mils}$$

$$CSA = \frac{3.14 \times 0.15 \times 0.15 \times 19}{4} = 0.336 \ mm^2$$

6.4 Both CMA and CSA are listed in the tables in the following chapters and either may be employed. CMA is easier to calculate leaving less room for error.

6.5 Multiply CSA by 1973 to convert to CMA.

INSULATION SUPPORT

7 Terminations often feature an insulation support which prevents any bend strain where the cable enters the termination being felt directly by the conductor.

8 The support consists of an extension of the termination crimp barrel which fits over the insulation when the conductor is inserted into the barrel. This extension is crimped onto the insulation at the same time as the termination barrel is crimped to the conductor. For a given conductor size insulation diameters can vary and terminations are supplied within a range of insulation accommodation sizes. Thus the insulation diameter must be measured and considered when selecting terminations.

9 Having established the cable conductor size and the insulation diameter, the other parameters such as stud size, termination dimensions and temperature range depend on individual application. The tables in the following chapters enable the user to identify the correct termination, its reference and part numbers together with the cable stripping length and the correct crimping tool.

CONTROL AND CARE OF CRIMPING TOOLS

10 Crimping tools are precision equipment. As such they must be properly maintained and tested. At unit level the control, maintenance and testing of crimping tools is the responsibility of the Precision Termination Tool (PTT) NCO, working from the detailed instructions contained in AP 120M-0612-1 (Precision Termination Tools - Control, Maintenance and Testing).

CHAPTER 2-0

AMP PRE-INSULATED DIAMOND GRIP (PIDG) TERMINATIONS

CONTENTS

TERMINATIONS

Description

1 Pre-insulated DIAMOND GRIP (PIDG) terminations are manufactured by AMP of GB Limited. They consist of a one-piece, tin-plated annealed copper tongue and barrel which accepts a cable conductor, over which a pre-insulated copper cable insulation support sleeve is permanently secured. The sleeve insulation material is either nylon, which is temperature rated to 105°C, or vinyl, which is rated to 85°C. On current terminations neither type of insulation sleeve is bonded to the copper barrel. On earlier models nylon insulation sleeves were bonded, thereby ensuring that the crimp was in the correct position. Vinyl sleeves have never been bonded. Terminations with vinyl sleeves do not meet DEF STAN 59-71 requirements for fluid immersion tests. These terminations are not to be used on Aircraft without seeking the permission of the respective Aircraft Support Authority.

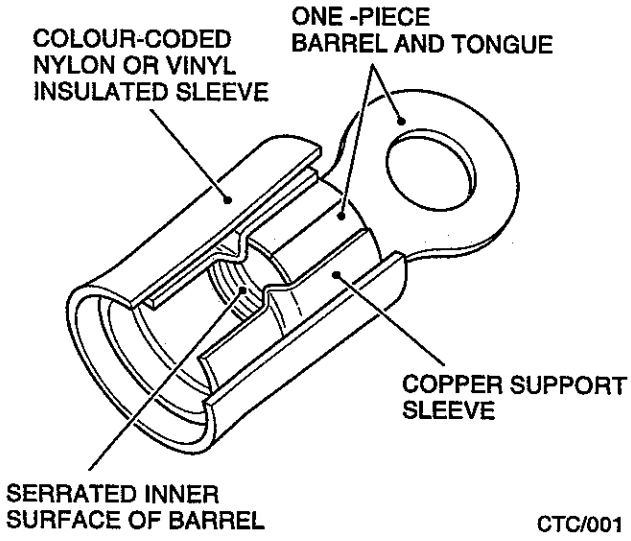

Fig 1 Construction of a PIDG termination

Size code

2 A cable size code, e.g. 26-22, is marked on the face of the tongue of each termination and on the associated tool. This code does not relate to the cable conductor size for service applications. The pre-insulated sleeve is colour coded according to the cable size code (see Tables 2 to 6). This colour is repeated on the handles of the associated tool to aid selection of the correct tool.

Dot code (Fig 2)

3 During the crimping operation the stripped conductor and cable insulation are inserted into the barrel and sleeve of the termination. The termination is then crimped to both the conductor and its insulation. A specified dot code (see Tables 2 to 6) is impressed into the termination insulating sleeve to provide a means of checking, by the code's presence, that the correct tool/termination combination has been used.

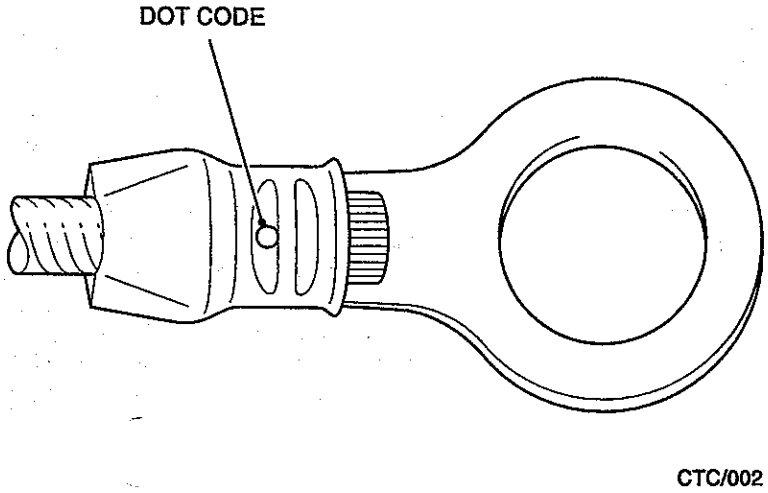

Fig 2 Dot code

NOTE

The dot code does not indicate that the correct cable/termination combination has been employed. This is decided by calculating the cable conductor size, as described in Chapter 1, then selecting the appropriate termination from the tables.

Insulation support

4 Cable insulation thickness for a given conductor size varies considerably. To ensure that the insulation will not be over or under crimped, there are generally at least two termination receiving barrel sizes for each conductor size range, but not in 24-20 or 26-22 AWG sizes. The tools themselves are provided with three insulation support crimp settings.

TOOLS

Introduction

5 Two types of hand-operated crimping tool may be used for crimping PIDG terminations - an 'A' frame type and a 'B' frame type (see Fig 3). The following description of how to adjust and operate tools applies to both types.

Locator spares kits for hand-operated crimping tools

6 A locator spares kit is available for each of the hand tools used for crimping PIDG terminations (see Table 1 for details).

TABLE 1 LOCATOR SPARES KITS FOR PIDG HAND-OPERATED CRIMPING TOOLS

Cable size code (1)	Hand tool Part No. (2)	Locator spares kit	
		NATO Stock No. or Reference No. (3)	AMP Part No. (4)
26 - 22	46121	1M/5120-99-5685508	525326-6
20 - 18	525690	1M/5120-99-3747036	525326-9
16 - 14	525691	1M/5120-99-5135377	525326-5
12 - 10	525692	1M/5120-99-5137549	525326-8

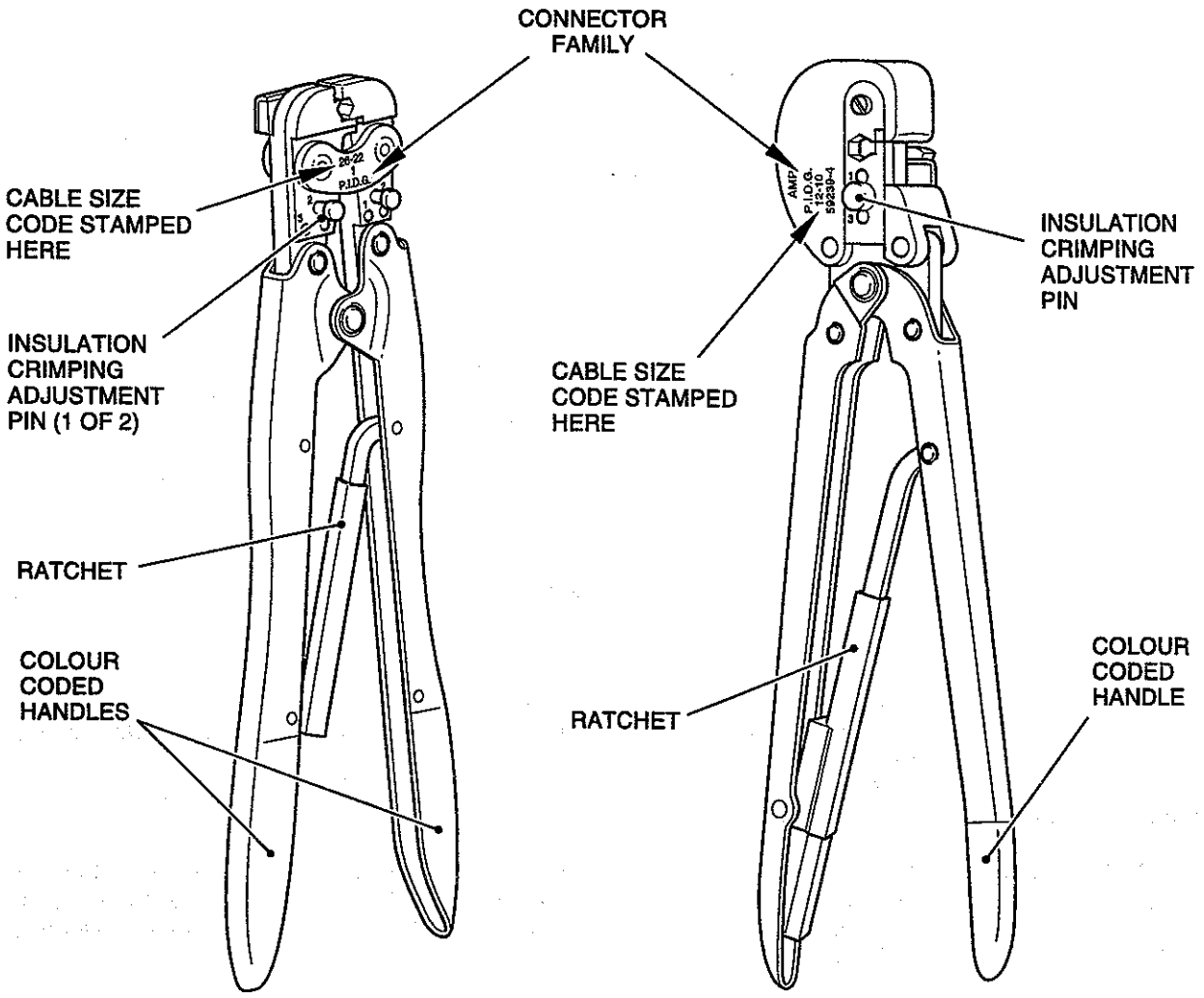

A FRAME

B FRAME

CTC/003

HANDLE COLOUR CODE	CABLE SIZE CODE
YELLOW	26 - 22
WHITE	24 - 20
RED	20 - 18
BLUE	16 - 14
YELLOW	12 - 10

Fig 3 Hand-operated crimping tools

Insulation crimping adjustment

7 To ensure that when crimping a termination to a cable the cable insulation is not over or under crimped, the tool is proved with three insulation crimp setting positions. Adjustment pins are inserted into one of these positions. The correct position for the pin must be determined by testing prior to actually crimping the termination to the cable.

8 Set the tool initially by inserting the adjustment pins into position 3 and then proceed as follows:

8.1 Place the termination between the crimping jaws as shown in either Fig 4 or Fig 5.

8.2 Insert the unstripped cable into the insulation support sleeve of the termination.

8.3 Crimp the termination.

8.4 Remove the termination from the tool and check for correct crimping of the insulation support by holding the termination and bending the cable back and forth through 90 degrees and 180 degrees once only (see Fig 6). The termination should retain its grip on the cable insulation.

8.5 If the cable pulls out during the bending test then insert the adjustment pin or pins into the next lower position and repeat the test from Para 8.1 until the cable does not pull out.

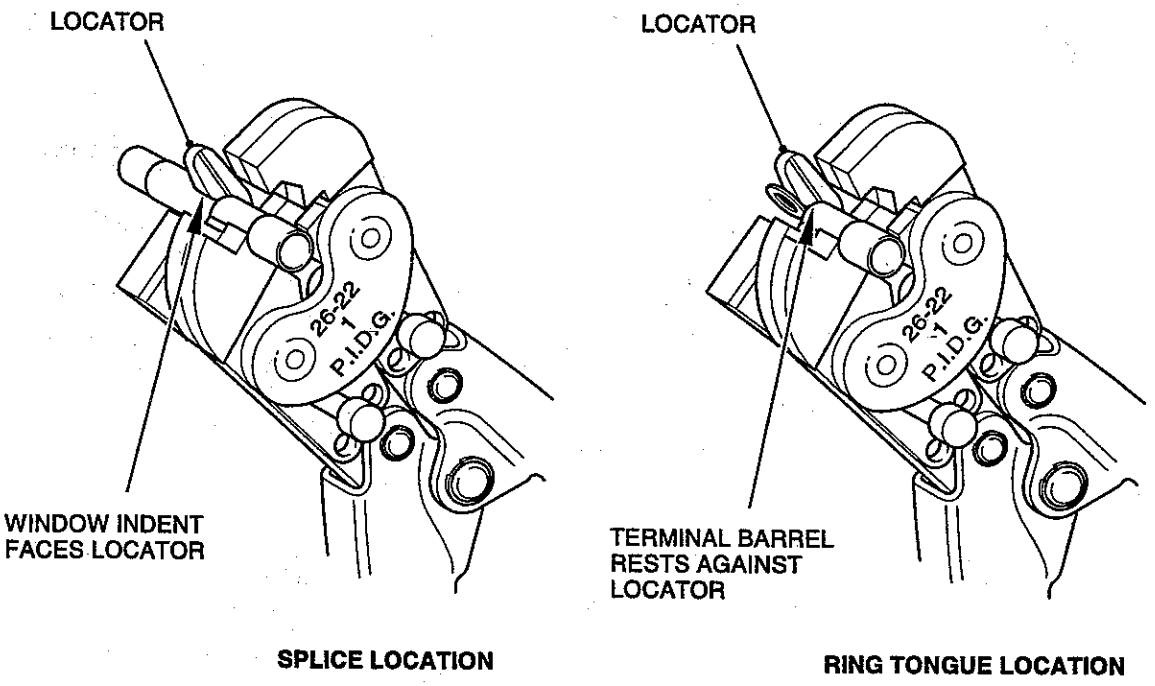

Fig 4 Correct location of termination in 'A' frame tool

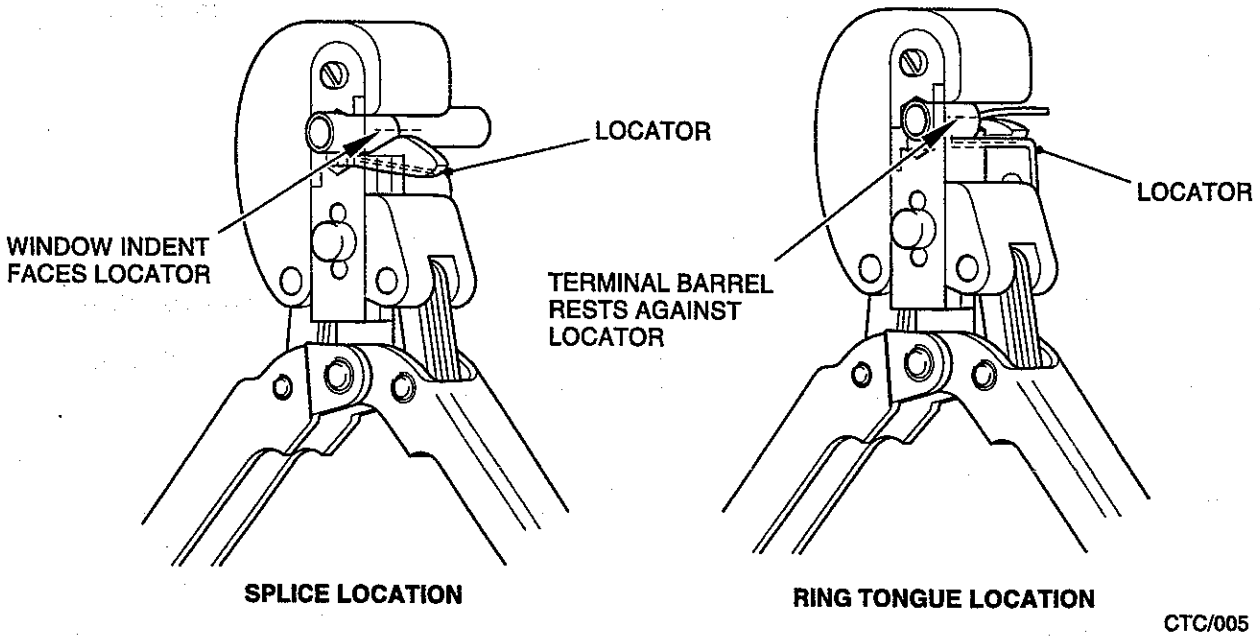

Fig 5 Correct location of termination in 'B' frame tool

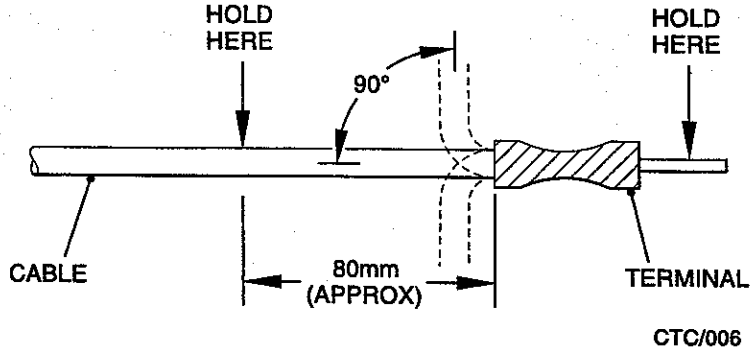

Fig 6 Insulation support test

Cable stripping

9 When stripping insulation from a conductor the correct tool and blade must be used, dependent on the type of insulation. Detailed information on cable stripping is given in AP 113D-1700-1. The wire must be stripped to the correct length (as specified in Tables 2 to 6). It is essential that the insulation is removed without damaging the conductor.

CRIMPING

Crimping procedure

10 The following procedure applies to both types of hand crimping tools (see Fig 3).

10.1 Check that the crimping tool is registered with the PTT NCO.

10.2 Open the crimping jaws by squeezing the handles until the ratchet releases. The jaws then open automatically.

10.3 Place the termination in the crimping jaws (see Fig 4 or Fig 5) so that the barrel butts against the locator as shown.

10.4 Squeeze the handles until the termination is just held in place by the ratchet. Do not deform the termination.

10.5 Insert the correctly stripped cable into the termination barrel.

10.6 Hold the cable in position and complete the crimp by squeezing the handles until the ratchet releases.

Inspecting the crimp

11 Inspect the crimp as described below:

11.1 Check that the correct dot code is clearly impressed into the terminal insulation sleeve.

11.2 Check that the conductor protrudes approximately 0.8 mm (1/32 in) from the barrel.

USE OF TABLES

12 Tables 2 to 6 contain all the information necessary to identify the correct termination for a particular application together with its reference number. The cable stripping length is shown for each termination and also the correct tool with its dot code.

13 The cable size code is included in the tables for reference only. The actual conductor size, circular mil area (CMA) and cross sectional area (CSA) must be determined either by measurement or by reference to specifications.

14 Before referring to the tables the following information is required. This must be obtained either by measurement or from specifications (check both where confusion may exist).

14.1 Cable conductor CMA or CSA (refer to Chapter 1) and cable insulation overall diameter.

14.2 Termination type, stud size and dimensions.

15 With the information at Para 14, identify the appropriate table. From the illustrations locate the required section of the table. Then by reference to stud size, cable insulation range, etc the termination reference number is obtained. Stripping length and crimping tool details are specified in each table header and apply to all the terminations listed in that table.

TABLE 2 PIDG TERMINATIONS FOR CABLES: CMA 202 TO 810, CSA 0.1 TO 0.41 MM², CABLE SIZE CODE 26 TO 22

Terminal/tool colour	: Yellow	Tool Ref No.	: 1M/5120-99-1047970
Cable size code	: 26 - 22	Tool Part No.	: 46121
Dot code	: One dot		
Cable strip length	: 4 to 4.8 mm (splice: 5.2 to 6 mm)		

Ring tongue

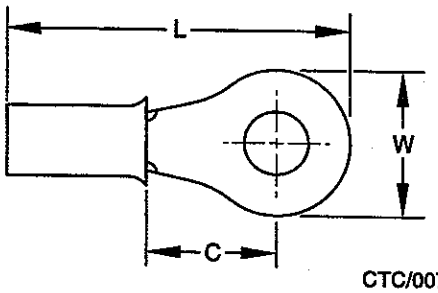

CTC/007

Stud size mm	Stud size BA/in	Max. insul'n diam. mm	Sleeve type	Dimensions W mm	Dimensions L mm	Dimensions C mm	NATO Stock No. or Reference No.	AMP Part No.
-	10	2.1	Nylon	3.6	13.3	3.1	5940-99-1426953	321013
2	8	2.1	Nylon	3.6	13.3	3.1	5940-14-3193059	323912
2	8	2.1	Nylon	5.2	16.4	5.4	5940-01-1366935	323913
2	8	2.1	Nylon	4.2	15.7	5.4	5X/ 5940-99-9130784	321620
2.5	6	2.1	Nylon	5.2	16.4	5.4	5940-99-6389747	323914
3/3.5	4	2.1	Nylon	5.2	16.4	5.4	5X/ 5940-99-6438679	323915
3/3.5	4	2.1	Nylon	6.4	18.4	7.1	5X/ 5940-99-1142299	326875
4	3	2.1	Nylon	6.4	18.8	7.1	5940-14-2317515	323916
4.5	2	2.1	Nylon	6.4	18.8	7.1	5940-99-7417308	324075

Rectangular tongue

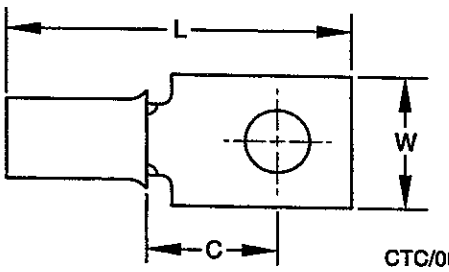

CTC/008

Stud size mm	Stud size BA/in	Max. insul'n diam. mm	Sleeve type	Dimensions W mm	Dimensions L mm	Dimensions C mm	NATO Stock No. or Reference No.	AMP Part No.
3/3.5	4	2.1	Nylon	7.0	19.9	7.8	5940-00-8040365	330250
3/3.5	4	2.1	Nylon	7.0	21.2	7.8	5940-00-9269745	329825

TABLE 2 PIDG TERMINATIONS FOR CABLES: CMA 202 TO 810, CSA 0.1 TO 0.41 MM², CABLE SIZE CODE 26 TO 22 (Continued)

Spade tongue

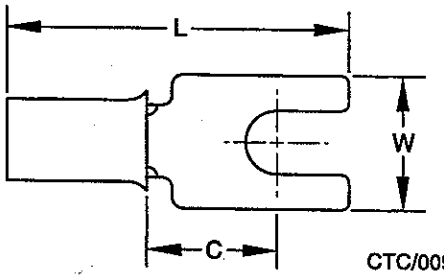

Stud size mm	Stud size BA/in	Max. insul'n diam. mm	Sleeve type	Dimensions W mm	Dimensions L mm	Dimensions C mm	NATO Stock No. or Reference No.	AMP Part No.
2.5	6	2.1	Nylon	5.2	15.9	5.4	5940-99-6228965	321035
-	10	2.1	Nylon	3.2	12.1	2.0	5940-00-7113734	322001

Slotted ring tongue

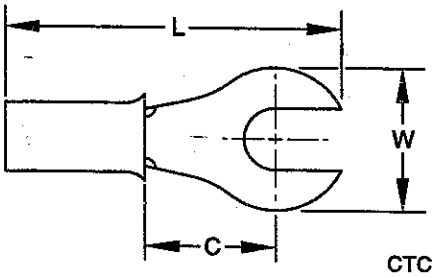

Stud size mm	Stud size BA/in	Max. insul'n diam. mm	Sleeve type	Dimensions W mm	Dimensions L mm	Dimensions C mm	NATO Stock No. or Reference No.	AMP Part No.
3/3.5	4	2.1	Nylon	6.4	18.3	7.1	5940-99-7865426	323011

Short spring spade tongue

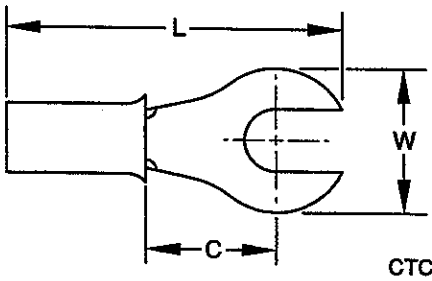

Stud size mm	Stud size BA/in	Max. insul'n diam. mm	Sleeve type	Dimensions W mm	Dimensions L mm	Dimensions C mm	NATO Stock No. or Reference No.	AMP Part No.
2	8	2.1	Nylon	4.3	16.5	5.2	5940-01-2691817	52921
2-5	6	2.1	Nylon	5.2	17.7	5.6	5940-01-2867358	52922
3	-	2.1	Nylon	6.4	17.3	5.2	5940-01-2832235	52923
3/3.5	4	2.1	Nylon	6.4	17.3	5.2	5940-01-1303876	52924
4	3	2.1	Nylon	9.5	20.0	7.1	5940-00-6212290	52925

TABLE 2 PIDG TERMINATIONS FOR CABLES: CMA 202 TO 810, CSA 0.1 TO 0.41 MM², CABLE SIZE CODE 26 TO 22 (Continued)

Butt splice

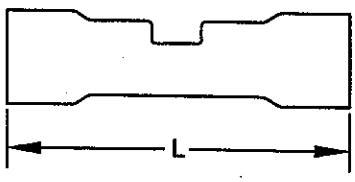

CTC/012

Stud size mm	Stud size BA/in	Max. insul'n diam. mm	Sleeve type	Dimensions W mm	Dimensions L mm	Dimensions C mm	NATO Stock No. or Reference No.	AMP Part No.
-	-	2.1	Nylon	-	22.6	-	5X/ 5940-99-6510804	323994

TABLE 3 PIDG TERMINATIONS FOR CABLES: CMA 320 TO 1,290, CSA 0.16 TO 0.65 MM², CABLE SIZE CODE 24 TO 20

Terminal/tool colour	: Translucent white	Tool Ref No.	: 1M/5120-99-9617034
Cable size code	: 24 - 20	Tool Part No	: 47907
Dot code	: Two dots		
Cable strip length	: 4.8 to 5.6 mm (splice: 5.2 to 6.4 mm)		

Ring tongue

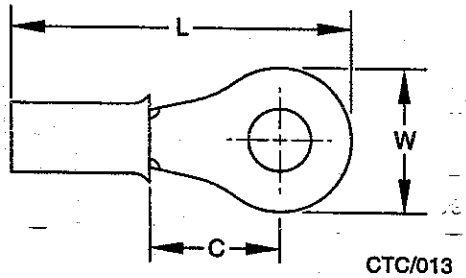

CTC/013

Stud size mm	Stud size BA/in	Max. insul'n diam. mm	Sleeve type	Dimensions W mm	Dimensions L mm	Dimensions C mm	NATO Stock No. or Reference No.	AMP Part No.
2	8	2.5	Nylon	4.1	15.0	3.2	5940-00-9012981	329636
2.5	6	2.5	Nylon	5.5	19.1	6.4	5X/ 5940-99-0011658	150493
2.5	6	2.5	Nylon	7.1	19.7	6.4	5940-99-6391388	323985
3/3.5	4	2.5	Nylon	5.5	19.1	6.4	5X/ 5940-99-1036734	150494
3/3.5	4	2.5	Nylon	7.1	19.7	6.4	5940-00-6179780	323986
4	3	2.5	Nylon	7.9	20.9	7.1	5940-99-1970113	323989
4.5	2	2.5	Nylon	7.9	20.9	7.1	5X/ 5940-99-1970114	323990

Butt splice

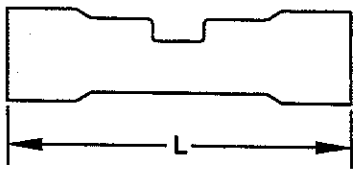

CTC/014

Stud size mm	Stud size BA/in	Max. insul'n diam. mm	Sleeve type	Dimensions W mm	Dimensions L mm	Dimensions C mm	NATO Stock No. or Reference No.	AMP Part No.
-	-	2.5	Nylon	-	26.3	-	5X/ 5940-99-1970111	323975

TABLE 4 PIDG TERMINATIONS FOR CABLES: CMA 812 TO 2,052, CSA 0.412 TO 1.02 MM², CABLE SIZE CODE 20 TO 18

Terminal/tool colour	: Red	Tool Ref No.	: 1M/1176
Cable size code	: 20 - 18	Tool Part No	: 525690
Dot code	: One dot		
Cable strip length	: 5.2 to 6 mm (splice: 6.4 to 7.1 mm)		

Ring tongue

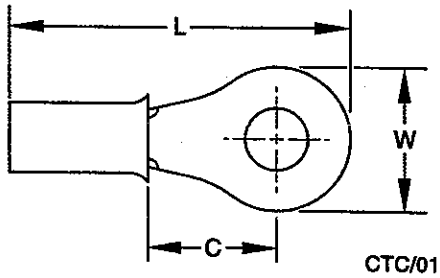

CTC/015

Stud size mm	Stud size BA/in	Max. insul'n diam. mm	Sleeve type	Dimensions W mm	Dimensions L mm	Dimensions C mm	NATO Stock No. or Reference No.	AMP Part No.
2	8	3.1	Nylon	5.5	17.1	4.0	5X/ 5940-99-1147771	328657
2	8	3.1	Nylon	4.6	17.0	4.4	5940-00-0693456	324158
2.5	6	3.1	Nylon	5.5	17.1	4.0	5X/ 5940-99-2236923	320553
2.5	6	3.1	Nylon	4.6	17.0	4.4	5940-99-6261800	327654
2.5	6	3.5	Nylon	4.6	17.0	4.4	10H/ 5940-99-6490664	328878
2.5	6	3.5	Nylon	4.6	17.0	4.4	5940-99-7103753	320882
2.5	6	3.5	Nylon	5.5	17.1	4.0	5X/ 5940-99-9436732	31880
2.5	6	3.1	Nylon	6.4	21.4	7.9	5940-99-6514816	323758
2.5	6	3.1	Nylon	7.1	19.8	6.4	5X/ 5940-99-6323319	150084
3/3.5	4	3.1	Nylon	5.5	17.1	4.0	5X/ 5940-99-1116558	36149
3/3.5	4	3.1	Nylon	6.4	19.9	6.4	5940-00-2048966	51863
3/3.5	4	3.1	Nylon	7.1	20.3	6.4	5X/ 5940-99-1051675	36151
3/3.5	4	3.5	Nylon	7.1	20.3	6.4	5940-99-7124988	36152
3/3.5	4	3.5	Nylon	7.9	21.4	7.1	5X/ 5940-99-1147769	326878
3/3.5	4	3.1	Nylon	7.9	21.4	7.1	5940-99-1155355	323008
3/3.5	4	3.1	Nylon	7.9	16.3	7.5	10H/ 5940-99-1957074	150074
4	3	3.1	Nylon	7.9	21.4	7.1	5X/ 5940-99-1140434	320551
4	3	3.1	Nylon	7.1	20.2	6.3	5X/ 5940-99-1179302	320554
4	3	3.5	Nylon	7.9	21.4	7.1	5940-99-2568608	31890
4	3	3.5	Nylon	7.1	20.3	6.4	5940-00-5577870	31886
4	3	3.5	Nylon	7.9	15.9	7.1	5X/ 5940-99-7124975	150317
4.5	2	3.1	Nylon	7.9	21.4	7.1	5X/ 5940-99-7140997	36153
4.5	2	3.1	Nylon	7.1	20.2	6.4	5X/ 5940-00-8145354	320552
4.5	2	3.5	Nylon	7.1	20.2	6.4	5940-99-6350408	31887
4.5	2	3.5	Nylon	8.7	22.3	7.5	110H/ 5940-99-7478243	32837
5	-	3.1	Nylon	7.9	15.9	7.1	5940-99-7402697	130005
5	-	3.5	Nylon	7.9	15.9	7.1	5940-99-7203146	130008
5	-	3.5	Nylon	7.1	14.7	6.3	5940-99-6572611	130582
5	-	3.1	Nylon	11.9	21.7	11.1	5940-99-7298439	130660
5	-	3.1	Nylon	7.9	15.9	7.1	5X/ 5940-99-6255607	150036-1

(continued)

TABLE 4 PIDG TERMINATIONS FOR CABLES: CMA 812 TO 2,052, CSA 0.412 TO 1.02 MM², CABLE SIZE CODE 20 TO 18 (Continued)

Ring tongue (Continued)

Stud size mm	Stud size BA/in	Max. insul'n diam. mm	Sleeve type	Dimensions W mm	Dimensions L mm	Dimensions C mm	NATO Stock No. or Reference No.	AMP Part No.
6	0	3.1	Nylon	11.9	27.4	11.1	5X/ 5940-99-1140436	320571
6	0	3.5	Nylon	11.9	27.4	11.1	5X/ 5940-99-9129707	31894
6	0	3.5	Nylon	11.9	21.7	11.1	5940-99-7124982	150299
6	0	3.1	Nylon	11.9	21.7	11.1	5X/ 5940-99-6219974	130042
8	5/16	3.1	Nylon	11.9	27.4	11.1	5X/ 13563	320572
8	5/16	3.5	Nylon	11.9	21.7	11.1	5X/ 14273	150300
8	5/16	3.5	Nylon	11.9	27.4	11.1	5X/ 5940-99-5236039	31895
8	5/16	3.1	Nylon	13.5	30.9	13.9	- 5940-99-1082501	324123
9/9.5	3/8	3.5	Nylon	16.7	29.4	11.2	5940-99-1144115	150301
9/9.5	3/8	3.1	Nylon	13.5	30.9	13.9	5X/ 5940-99-1177472	320573
9/9.5	3/8	3.1	Nylon	16.7	29.8	11.1	5940-99-4232994	321522
10	-	3.5	Nylon	16.7	29.4	11.1	5940-99-2550629	150072-1
12	1/2	3.1	Nylon	18.1	32.9	13.5	5X/ 5940-99-5370662	328975

Extended ring tongue

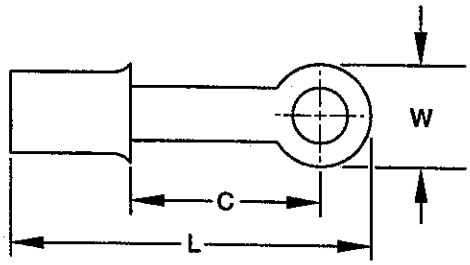

CTC/016

Stud size mm	Stud size BA/in	Max. insul'n diam. mm	Sleeve type	Dimensions W mm	Dimensions L mm	Dimensions C mm	NATO Stock No. or Reference No.	AMP Part No.
2.5	6	3.1	Nylon	6.3	23.0	9.3	5X/ 5940-99-6427474	150380
3/3.5	4	3.1	Nylon	6.3	23.0	9.3	5X/ 5940-99-6420886	150382
3/3.5	4	3.1	Nylon	6.3	25.4	16.5	5X/ 14322	150383

TABLE 4 PIDG TERMINATIONS FOR CABLES: CMA 812 TO 2,052, CSA 0.412 TO 1.02 MM², CABLE SIZE CODE 20 TO 18 (Continued)

Cranked ring tongue

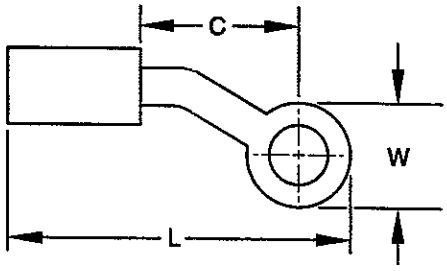

CTC/017

Stud size mm	Stud size BA/in	Max. insul'n diam. mm	Sleeve type	Dimensions W mm	Dimensions L mm	Dimensions C mm	NATO Stock No. or Reference No.	AMP Part No.
3/3.5	4	3.1	Nylon	6.3	24.2	11.2	5X/ 5940-99-1073558	150148

Rectangular tongue

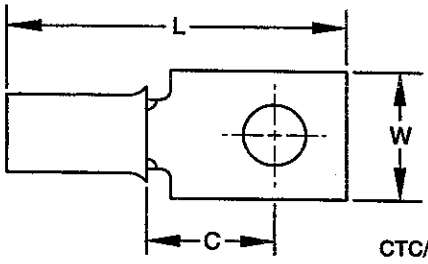

CTC/018

Stud size mm	Stud size BA/in	Max. insul'n diam. mm	Sleeve type	Dimensions W mm	Dimensions L mm	Dimensions C mm	NATO Stock No. or Reference No.	AMP Part No.
2	8	3.1	Nylon	4.6	18.5	5.2	5940-00-8282198	325148
2.5	6	3.5	Nylon	6.0	25.8	10.3	5940-00-8360357	327962
2.5	6	3.1	Nylon	5.5	20.3	6.3	5X/ 5940-99-6219975	130572
2.5	6	3.1	Nylon	5.6	14.6	6.3	5X/ 14089	130565
3.5	4	3.1	Nylon	7.1	20.0	5.6	5X/ 5940-99-1073554	150747
3.5	4	3.5	Nylon	6.3	21.5	7.9	5940-00-2048949	33476
3/3.5	4	3.1	Nylon	6.4	21.5	7.9	5940-99-2236922	320629
3/3.5	4	3.1	Nylon	7.5	19.1	5.2	5940-99-4501573	32453
4	3	3.5	Nylon	7.7	28.2	11.8	5940-00-8253694	327944
4	3	3.5	Nylon	9.9	34.5	15.8	5940-00-8358833	327932

TABLE 4 PIDG TERMINATIONS FOR CABLES: CMA 812 TO 2,052, CSA 0.412 TO 1.02 MM², CABLE SIZE CODE 20 TO 18 (Continued)

Spade tongue

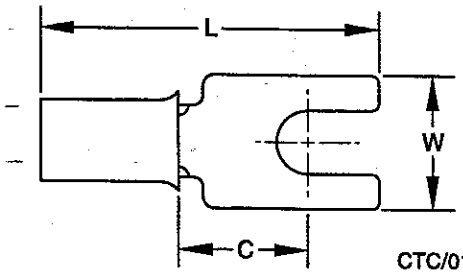

CTC/019

Stud size mm	Stud size BA/in	Max. insul'n diam. mm	Sleeve type	Dimensions W mm	Dimensions L mm	Dimensions C mm	NATO Stock No. or Reference No.	AMP Part No.
2	8	3.5	Nylon	4.6	18.5	5.2	5940-00-8276595	328394
2.5	6	3.5	Nylon	5.5	17.1	4.0	5940-00-7627186	327717
2.5	6	3.5	Nylon	7.1	20.1	6.4	110H 5940-99-7674341	130512
3/3.5	4	3.1	Nylon	7.5	19.1	5.2	5940-99-1978410	34080
3/3.5	4	3.5	Nylon	7.5	19.1	5.2	10H 5940-99-7674340	326880
3.5	4	3.1	Nylon	8.7	19.9	5.5	5940-00-2300508	32403
3.5	4	3.5	Nylon	8.7	19.9	5.5	5940-00-2693514	32404
3.5	4	3.5	Nylon	6.3	21.5	7.9	5940-00-6365593	34541
4	3	3.5	Nylon	9.5	23.1	7.9	5940-00-1875119	32053
4	3	3.1	Nylon	9.5	23.1	7.9	5940-00-6663357	32050
4.5	2	3.1	Nylon	9.5	23.1	7.9	5K/ 5940-99-2226777	32051
4.5	2	3.5	Nylon	9.5	23.1	7.9	5940-99-6338149	32054

Flanged spade tongue

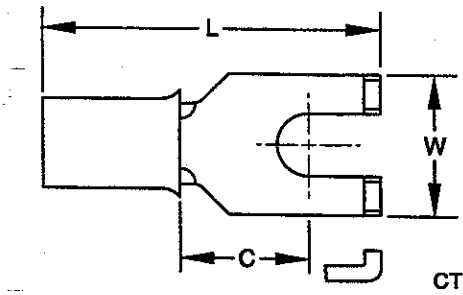

CTC/020

Stud size mm	Stud size BA/in	Max. insul'n diam. mm	Sleeve type	Dimensions W mm	Dimensions L mm	Dimensions C mm	NATO Stock No. or Reference No.	AMP Part No.
2	8	3.5	Nylon	4.6	18.5	5.2	5940-00-5236733	324608
3/3.5	4	3.1	Nylon	7.5	18.7	5.2	5940-99-8029440	32561
3/3.5	4	3.1	Nylon	6.4	18.7	5.2	5940-00-8378241	322777
3/3.5	4	3.5	Nylon	7.5	18.7	5.2	5940-14-3541266	32562
3/3.5	4	3.5	Nylon	8.3	18.7	5.2	5940-00-6610401	324557
3/3.5	4	3.5	Nylon	6.7	18.7	5.2	5940-00-8775227	322426
4	3	3.1	Nylon	10.6	21.1	6.4	5X/ 5940-00-2712312	32497
4	3	3.5	Nylon	10.6	21.1	6.4	5940-00-7397463	32498

TABLE 4 PIDG TERMINATIONS FOR CABLES: CMA 812 TO 2,052, CSA 0.412 TO 1.02 MM², CABLE SIZE CODE 20 TO 18 (Continued)

Hook tongue

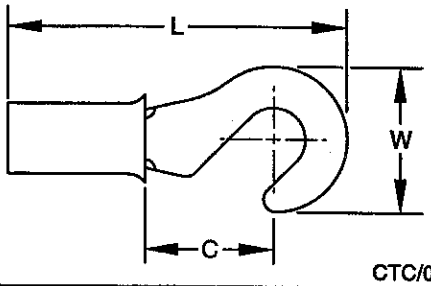

CTC/021

Stud size mm	Stud size BA/in	Max. insul'n diam. mm	Sleeve type	Dimensions W mm	Dimensions L mm	Dimensions C mm	NATO Stock No. or Reference No.	AMP Part No.
4	3	3.5	Nylon	8.7	22.3	7.5	5X/ 5940-99-6207236	32456
4	3	3.1	Nylon	8.7	22.3	7.5	5940-00-2361572	32455

Slotted ring tongue

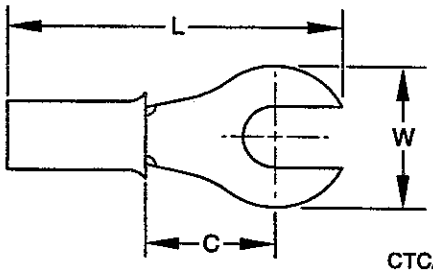

CTC/022

Stud size mm	Stud size BA/in	Max. insul'n diam. mm	Sleeve type	Dimensions W mm	Dimensions L mm	Dimensions C mm	NATO Stock No. or Reference No.	AMP Part No.
2.5	6	3.5	Nylon	4.6	16.5	4.4	5X/ 5940-99-6186366	150246
2.5	6	3.1	Nylon	4.6	16.5	4.4	110H/ 5940-99-1409214	160025
6	0	3.1	Nylon	11.9	26.4	11.1	5940-99-6226836	321808

Wire pin

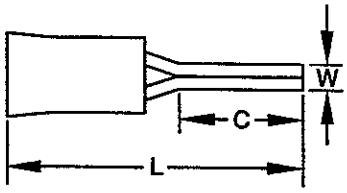

CTC/023

Stud size mm	Stud size BA/in	Max. insul'n diam. mm	Sleeve type	Dimensions W mm	Dimensions L mm	Dimensions C mm	NATO Stock No. or Reference No.	AMP Part No.
-	-	3.1	Nylon	1.8	19.6	6.7	5X/ 5940-99-4501389	165142

TABLE 4 PIDG TERMINATIONS FOR CABLES: CMA 812 TO 2,052, CSA 0.412 TO 1.02 MM², CABLE SIZE CODE 20 TO 18 (Continued)

Lipped blade

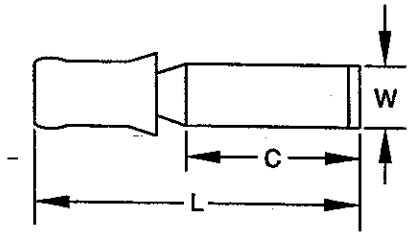

CTC/024

Stud size mm	Stud size BA/in	Max. insul'n diam. mm	Sleeve type	Dimensions W mm	Dimensions L mm	Dimensions C mm	NATO Stock No. or Reference No.	AMP Part No.
-	-	3.1	Nylon	3.0	27.8	13.8	5X/ 5940-99-7583693	154708

Short spring spade tongue

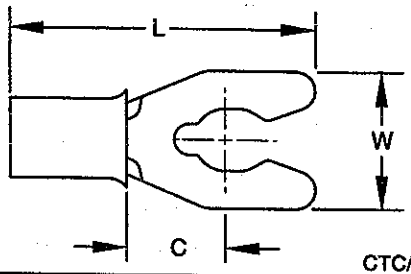

CTC/024A

Stud size mm	Stud size BA/in	Max. insul'n diam. mm	Sleeve type	Dimensions W mm	Dimensions L mm	Dimensions C mm	NATO Stock No. or Reference No.	AMP Part No.
2.5	6	3.1	Nylon	5.2	20.3	6.4	5940-01-2792918	52927
3	-	3.1	Nylon	6.4	20.3	6.4	5940-00-6818184	52928
3.5	4	3.1	Nylon	6.4	20.3	6.4	5940-01-0202021	52929
4	3	3.1	Nylon	9.5	21.9	7.1	110H/ 5940-01-1150741	52930
4.5	2	3.1	Nylon	10.3	23.1	7.1	5940-01-0870284	52931
M6	0	3.1	Nylon	15.9	26.2	8.7	5940-01-1208186	52933

Flat tab

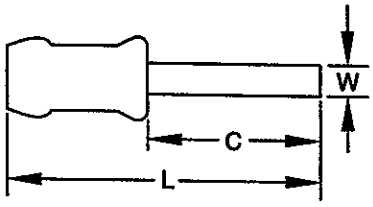

CTC/025

Stud size mm	Stud size BA/in	Max. insul'n diam. mm	Sleeve type	Dimensions W mm	Dimensions L mm	Dimensions C mm	NATO Stock No. or Reference No.	AMP Part No.
-	-	3.5	Nylon	1.2	14.1	8.7	5X/ 5940-99-7583692	165446
-	-	3.1	Nylon	2.4	22.2	12.3	5X/ 5940-99-5471115	150730

TABLE 4 PIDG TERMINATIONS FOR CABLES: CMA 812 TO 2,052, CSA 0.412 TO 1.02 MM², CABLE SIZE CODE 20 TO 18 (Continued)

Sheared rectangular tongue

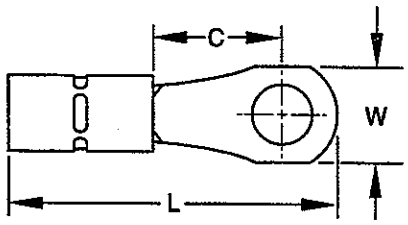

CTC/026

Stud size mm	Stud size BA/in	Max. insul'n diam. mm	Sleeve type	Dimensions W mm	Dimensions L mm	Dimensions C mm	NATO Stock No. or Reference No.	AMP Part No.
2.5	6	3.1	Nylon	5.6	20.6	7.9	5X/ 5940-99-2222892	151465

Butt splice

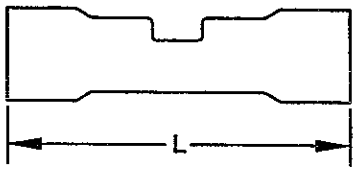

CTC/027

Stud size mm	Stud size BA/in	Max. insul'n diam. mm	Sleeve type	Dimensions W mm	Dimensions L mm	Dimensions C mm	NATO Stock No. or Reference No.	AMP Part No.
-	-	3.2	Nylon	-	32.1	-	5X/ 2325209	320559

Step-down butt splice and adaptor

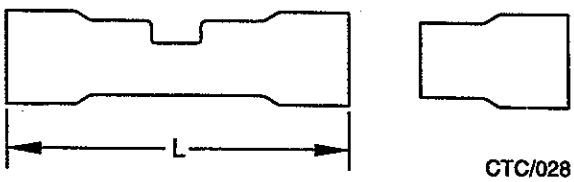

CTC/028

Cable size AWG From	Cable size AWG To	Max. insul'n diam. mm	Sleeve type	Dimensions W mm	Dimensions L mm	Dimensions C mm	NATO Stock No. or Reference No.	AMP Part No.
20-18	16-14	2.9-3.8	Nylon	-	32.1	-	5X/ 5940-99-6219981	327583
20-18	3.6-5.6	3.6-5.6	Nylon	-	42.1	-	5X/ 5940-99-6219982	327639

TABLE 4 PIDG TERMINATIONS FOR CABLES: CMA 812 TO 2,052, CSA 0.412 TO 1.02 MM², CABLE SIZE CODE 20 TO 18 (Continued)

Step-down adaptor

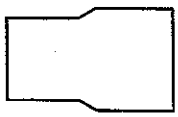

CTC/029

Cable size AWG From	Cable size AWG To	Max. insul'n diam. mm	Sleeve type	Dimensions W mm	Dimensions L mm	Dimensions C mm	NATO Stock No. or Reference No.	AMP Part No.
20-18	16-14	2.9	Nylon	-	-	-	5X/5940-99-1178868 (for use in butt splice 5X/5940-14-2074371, Part No. 320562)	327635
20-18	12-10	3.6	Nylon	-	-	-	5X/5940-99-1178870 (for use in butt splice 5X/5940-14-2074372, Part No. 320570)	327636

Knife disconnect

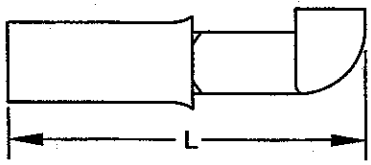

CTC/030

Stud size mm	Stud size BA/in	Max. insul'n diam. mm	Sleeve type	Dimensions W mm	Dimensions L mm	Dimensions C mm	NATO Stock No. or Reference No.	AMP Part No.
-	-	3.1	Nylon	-	22.3	-	5940-00-7126404	320555

Ferrule

NOTE

Use hand tool, 1M/5120-99-6353707, Part No. 575043 with this ferrule.

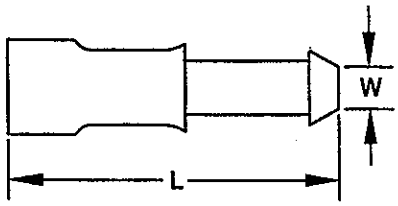

CTC/031

Stud size mm	Stud size BA/in	Max. insul'n diam. mm	Sleeve type	Dimensions W mm	Dimensions L mm	Dimensions C mm	NATO Stock No. or Reference No.	AMP Part No.
-	-	3.3	Nylon	4.1	19.0	-	5X/ 5940-99-5370530	150386

TABLE 4 PIDG TERMINATIONS FOR CABLES: CMA 812 TO 2,052, CSA 0.412 TO 1.02 MM², CABLE SIZE CODE 20 TO 18 (Continued)

Spare wire cap

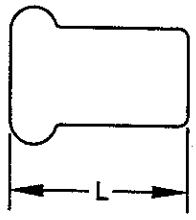

CTC/032

Stud size mm	Stud size BA/in	Max. insul'n diam. mm	Sleeve type	Dimensions W mm	Dimensions L mm	Dimensions C mm	NATO Stock No. or Reference No.	AMP Part No.
-	-	3.1	Nylon	-	10.9	-	5X/ 5940-99-1178871	328307

TABLE 5 PIDG TERMINATIONS FOR CABLES: CMA 2,050 TO 5,180, CSA 1.04 TO 2.62 MM², CABLE SIZE CODE 16 TO 14

Terminal/tool colour	: Blue	Tool Ref No.	: 1M/1177
Cable size code	: 16 - 14	Tool Part No	: 525691
Dot code	: Two dots		
Cable strip length	: 5.2 to 6 mm (splice: 6.4 to 7.1 mm)		

Ring tongue

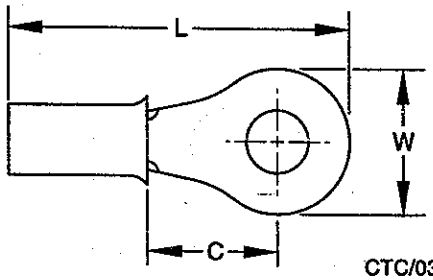

CTC/033

Stud size mm	Stud size BA/in	Max. insul'n diam. mm	Sleeve type	Dimensions W mm	Dimensions L mm	Dimensions C mm	NATO Stock No. or Reference No.	AMP Part No.
2	8	4.3	Nylon	4.6	17.0	4.3	5940-00-8252387	324993
2.5	6	3.8	Nylon	6.4	17.9	4.3	5X/ 5940-99-7124979	324159
2.5	6	3.8	Nylon	6.4	20.7	7.1	5X/ 5940-99-7124978	323676
2.5	6	4.3	Nylon	6.4	17.9	4.3	5940-00-6156073	328996
3	-	3.8	Nylon	8.7	17.4	7.1	5X/ 5940-99-7504834	130662
3/3.5	4	3.8	Nylon	7.9	21.4	7.1	5940-00-1138179	51864
3/3.5	4	3.8	Nylon	6.4	17.9	4.3	5X/ 14259	320561
3/3.5	4	3.8	Nylon	7.1	20.6	7.1	5X/ 5940-99-1125165	150367
3/3.5	4	3.8	Nylon	8.7	21.8	7.1	5X/ 5940-99-7420066	36157
3/3.5	4	4.3	Nylon	6.4	17.9	4.3	5940-99-7886401	320619
3/3.5	4	4.3	Nylon	7.9	20.7	6.4	5X/ 5940-99-7124980	326882
3/3.5	4	4.3	Nylon	8.7	21.8	7.1	5X/ 5940-99-7512220	36158
4	3	3.8	Nylon	7.9	21.4	7.1	5940-00-1434774	51864-1
4	3	3.8	Nylon	8.7	21.8	7.1	5X/ 5940-99-1140435	320560
4	3	4.3	Nylon	8.7	21.8	7.1	5X/ 5940-99-6427473	320565
4.5	2	3.8	Nylon	7.9	21.4	7.1	5940-00-1434780	51864-2
4.5	2	3.8	Nylon	8.7	21.8	7.1	5X/ 5940-99-7124985	320574
4.5	2	4.3	Nylon	8.7	21.8	7.1	5X/ 5940-99-7512221	36160
4.5	2	4.3	Nylon	7.9	20.7	6.4	5X/ 5940-99-1147770	53942-1
5	-	3.8	Nylon	8.7	16.3	7.1	5X/ 5940-99-1178867	130663
5	-	4.3	Nylon	8.7	16.3	7.1	5940-12-1426072	130094
6	0	3.8	Nylon	11.9	27.4	11.1	5X/ 5940-00-2300515	320563
6	0	4.3	Nylon	8.7	16.3	7.1	5940-99-1127742	130095
6	0	4.3	Nylon	11.9	27.4	11.1	5940-01-0361472	321045
8	5/16	4.3	Nylon	11.9	27.4	11.1	5940-00-2835281	328998
9.5	3/8	3.8	Nylon	13.5	30.9	13.9	505X/ 5940-14-2824957	320564
9.5	3/8	4.3	Nylon	13.5	30.9	13.9	5940-99-7953062	328999
12	1/2	3.8	Nylon	18.1	32.9	13.5	5X/ 5940-99-7583695	328976

TABLE 5 PIDG TERMINATIONS FOR CABLES: CMA 2,050 TO 5,180, CSA 1.04 TO 2.62 MM², CABLE SIZE CODE 16 TO 14 (Continued)

Rectangular tongue

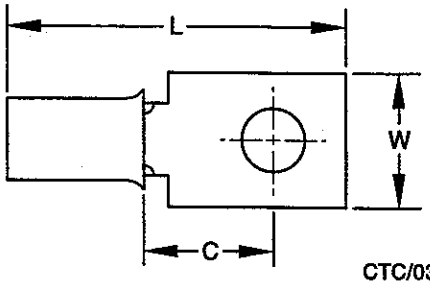

CTC/034

Stud size mm	Stud size BA/in	Max. insul'n diam. mm	Sleeve type	Dimensions W mm	Dimensions L mm	Dimensions C mm	NATO Stock No. or Reference No.	AMP Part No.
2.5	6	3.8	Nylon	6.0	20.2	6.0	5940-00-8360359	2-327970-4
3	-	4.3	Nylon	7.0	21.7	7.0	5940-00-8253697	327952
3/3.5	4	4.3	Nylon	6.2	21.8	7.9	5940-00-2297540	33173
3/3.5	4	3.8	Nylon	7.7	28.2	11.8	5940-00-7039241	2-327940-4
4	3	4.3	Nylon	6.2	21.8	7.9	5940-00-2300499	35279

Spade tongue

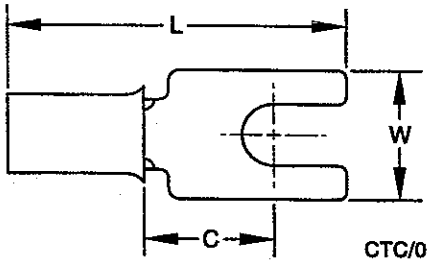

CTC/035

Stud size mm	Stud size BA/in	Max. insul'n diam. mm	Sleeve type	Dimensions W mm	Dimensions L mm	Dimensions C mm	NATO Stock No. or Reference No.	AMP Part No.
3/3.5	4	4.3	Nylon	9.5	23.1	7.9	5940-00-8403375	32058
3/3.5	4	4.3	Nylon	7.5	19.1	5.2	5940-00-5392193	35559
4	3	3.8	Nylon	9.5	23.1	7.9	5940-00-8649542	32056
4	3	4.3	Nylon	9.5	23.1	7.9	5940-00-5431924	32059
4	3	4.3	Nylon	7.5	19.1	5.2	5940-14-2824958	321233
4.5	2	4.3	Nylon	9.5	23.1	7.9	5940-00-5522019	32060

TABLE 5 PIDG TERMINATIONS FOR CABLES: CMA 2,050 TO 5,180, CSA 1.04 TO 2.62 MM², CABLE SIZE CODE 16 TO 14 (Continued)

Flanged spade tongue

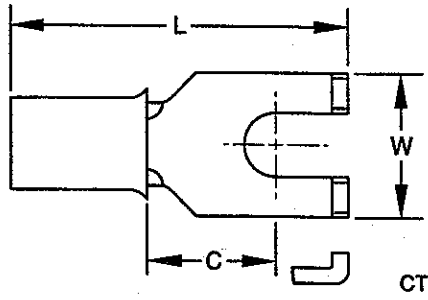

CTC/036

Stud size mm	Stud size BA/in	Max. insul'n diam. mm	Sleeve type	Dimensions W mm	Dimensions L mm	Dimensions C mm	NATO Stock No. or Reference No.	AMP Part No.
3/3.5	4	4.3	Nylon	7.5	18.7	5.2	5X/ 14299	320861
3.5	4	4.3	Nylon	8.3	18.7	5.2	5940-00-7549907	324567
4	3	4.3	Nylon	10.6	21.1	6.4	5X/ 14300	33156
4	3	4.3	Nylon	7.5	18.7	5.2	5940-00-8496590	320862
4.5	2	4.3	Nylon	7.5	18.7	5.2	5K/ 5940-99-6436920	320863

Hook tongue

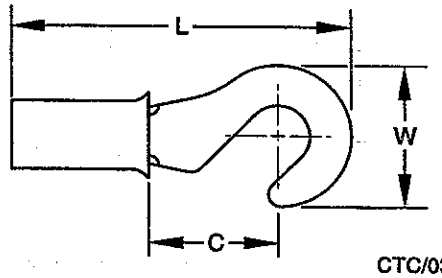

CTC/037

Stud size mm	Stud size BA/in	Max. insul'n diam. mm	Sleeve type	Dimensions W mm	Dimensions L mm	Dimensions C mm	NATO Stock No. or Reference No.	AMP Part No.
3/3.5	4	3.8	Nylon	8.7	21.8	7.1	5940-01-1331576	320381
4	3	4.3	Nylon	8.7	21.8	7.1	5940-00-9383269	320306

Slotted ring tongue

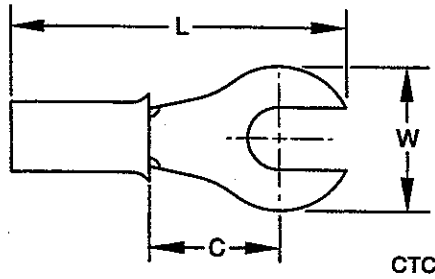

CTC/038

Stud size mm	Stud size BA/in	Max. insul'n diam. mm	Sleeve type	Dimensions W mm	Dimensions L mm	Dimensions C mm	NATO Stock No. or Reference No.	AMP Part No.
3/3.5	4	4.3	Nylon	8.7	21.4	7.1	5940-00-9648652	34406

TABLE 5 PIDG TERMINATIONS FOR CABLES: CMA 2,050 TO 5,180, CSA 1.04 TO 2.62 MM², CABLE SIZE CODE 16 TO 14 (Continued)

Wire pin

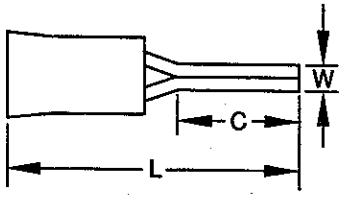

CTC/039

Stud size mm	Stud size BA/in	Max. insul'n diam. mm	Sleeve type	Dimensions W mm	Dimensions L mm	Dimensions C mm	NATO Stock No. or Reference No.	AMP Part No.
-	-	4.3	Nylon	1.8	19.6	6.7	5X/ 5940-99-4501408	165046

Rectangular ring

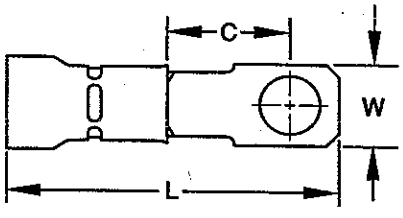

CTC/040

Stud size mm	Stud size BA/in	Max. insul'n diam. mm	Sleeve type	Dimensions W mm	Dimensions L mm	Dimensions C mm	NATO Stock No. or Reference No.	AMP Part No.
2.5	6	4.3	Nylon	5.5	20.1	7.1	5X/ 5940-99-6255608	152600

Lipped blade

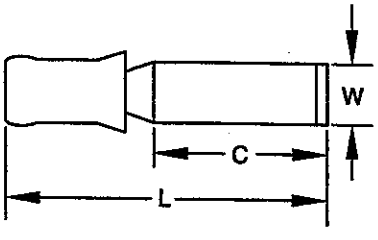

CTC/041

Stud size mm	Stud size BA/in	Max. insul'n diam. mm	Sleeve type	Dimensions W mm	Dimensions L mm	Dimensions C mm	NATO Stock No. or Reference No.	AMP Part No.
-	-	3.8	Nylon	3.0	26.2	13.8	5X/ 5940-99-7583694	154724

TABLE 5 PIDG TERMINATIONS FOR CABLES: CMA 2,050 TO 5,180, CSA 1.04 TO 2.62 MM², CABLE SIZE CODE 16 TO 14 (Continued)

Flat tab

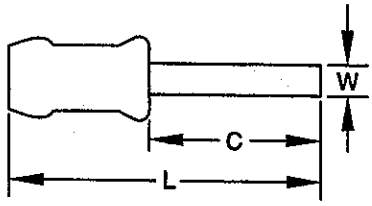

CTC/042

Stud size mm	Stud size BA/in	Max. insul'n diam. mm	Sleeve type	Dimensions W mm	Dimensions L mm	Dimensions C mm	NATO Stock No. or Reference No.	AMP Part No.
-	-	4.3	Nylon	3.0	29.8	20.1	5X/ 14439	790347

Butt splice

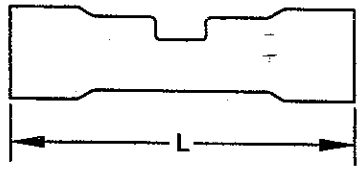

CTC/043

Stud size mm	Stud size BA/in	Max. insul'n diam. mm	Sleeve type	Dimensions W mm	Dimensions L mm	Dimensions C mm	NATO Stock No. or Reference No.	AMP Part No.
-	-	3.8	Nylon	-	32.1	-	5X/ 5940-14-2074371	320562

Step-down butt splice and adaptor

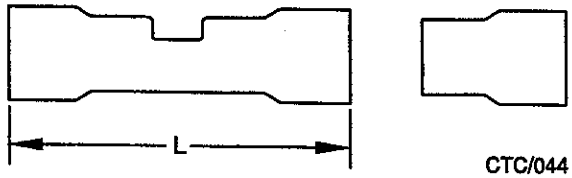

CTC/044

Cable size AWG From	Cable size AWG To	Max. insul'n diam. mm	Sleeve type	Dimensions W mm	Dimensions L mm	Dimensions C mm	NATO Stock No. or Reference No.	AMP Part No.
16-14	20-18	2.9-3.8	Nylon	-	32.1	-	5X/ 5940-99-6219981	327583
16-14	12-10	4.3-5.6	Nylon	-	42.1	-	5X/ 5940-99-6259732	327638

TABLE 5 PIDG TERMINATIONS FOR CABLES: CMA 2,050 TO 5,180, CSA 1.04 TO 2.62 MM², CABLE SIZE CODE 16 TO 14 (Continued)

Step-down adaptor

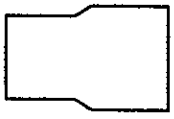

CTC/045

Cable size AWG From	Cable size AWG To	Max. insul'n diam. mm	Sleeve type	Dimensions W mm	Dimensions L mm	Dimensions C mm	NATO Stock No. or Reference No.	AMP Part No.
16-14	20-18	2.9	Nylon	-	-	-	5X/5940-99-1178868 (for use in butt splice 5X/5940-14-2074371, Part No. 320562)	327635
16-14	12-10	4.3	Nylon	-	-	-	5X/5940-99-1178869 (for use in butt splice 5X/5940-14-2074372, Part No. 320570)	327637

Ferrule

NOTE

Use handtool Part No. 575044 with this ferrule

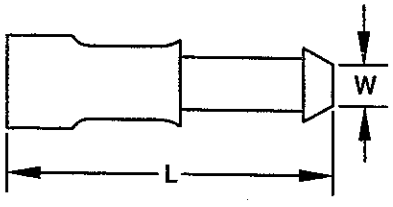

CTC/046

Stud size mm	Stud size BA/in	Max. insul'n diam. mm	Sleeve type	Dimensions W mm	Dimensions L mm	Dimensions C mm	NATO Stock No. or Reference No.	AMP Part No.
-	-	3.8	Nylon	4.1	19.0	-	5X/ 5940-99-7597809	150387

Knife disconnect

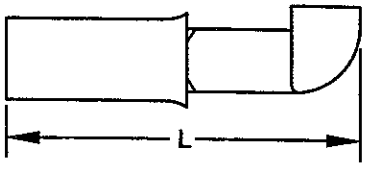

CTC/047

Stud size mm	Stud size BA/in	Max. insul'n diam. mm	Sleeve type	Dimensions W mm	Dimensions L mm	Dimensions C mm	NATO Stock No. or Reference No.	AMP Part No.
-	-	3.8	Nylon	-	22.3	-	5940-14-3199716	320566

TABLE 5 PIDG TERMINATIONS FOR CABLES: CMA 2,050 TO 5,180, CSA 1.04 TO 2.62 MM², CABLE SIZE CODE 16 TO 14 (Continued)

Spare wire cap

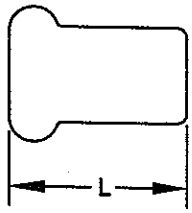

CTC/048

Stud size mm	Stud size BA/in	Max. insul'n diam. mm	Sleeve type	Dimensions W mm	Dimensions L mm	Dimensions C mm	NATO Stock No. or Reference No.	AMP Part No.
-	-	3.8	Nylon	-	10.9	-	5990-00-7291628	328308

TABLE 6 PIDG TERMINATIONS FOR CABLES: CMA 5,180 TO 13,100, CSA 2.63 TO 6.63MM², CABLE SIZE CODE 12 TO 10

Terminal/tool colour	: Yellow	Tool Ref No.	: 1M/5120-99-7257410
Cable size code	: 12 - 10	Tool Part No	: 525692
Dot code	: One dot		
Cable strip length	: 7.9 to 8.2 mm (splice: 8.7to 9.5 mm)		

Ring tongue

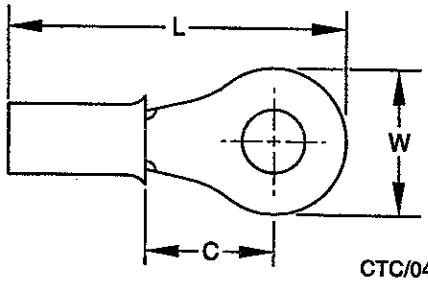

CTC/049

Stud size mm	Stud size BA/in	Max. insul'n diam. mm	Sleeve type	Dimensions W mm	Dimensions L mm	Dimensions C mm	NATO Stock No. or Reference No.	AMP Part No.
2.5	6	6.4	Nylon	7.1	23.8	5.7	5X/ 5940-99-7124974	150302
2.5	6	6.4	Nylon	7.1	24.2	5.6	5X/ 5940-99-7291863	35148
3/3.5	4	5.2	Nylon	7.2	17.5	7.2	5X/ 5940-99-1073544	150366
3/3.5	4	5.8	Nylon	7.1	24.2	5.6	5X/ 5940-99-1067668	320634
3/3.5	4	5.8	Nylon	9.5	27.5	7.7	5X/ 5940-99-1142651	320567
3/3.5	4	5.8	Nylon	7.9	26.7	7.7	5940-99-6514815	326886
3/3.5	4	6.4	Nylon	7.1	24.2	5.6	5940-99-5125691	35149
3/3.5	4	6.4	Nylon	9.5	27.5	7.7	5X/ 5940-99-9400078	35107
4	3	5.8	Nylon	7.9	26.2	7.1	5940-99-8200931	35787
4	3	5.8	Nylon	7.9	26.7	7.7	5940-99-7280581	324915
4	3	5.8	Nylon	9.5	27.5	7.7	5X/ 5940-99-1142650	320568
4	3	6.4	Nylon	9.5	27.5	7.7	5940-99-2523588	35108
4	3	7.6	Nylon	9.5	29.8	7.7	5940-14-2524620	35605
4.5	2	5.8	Nylon	9.5	27.5	7.7	5X/ 5940-99-7124990	36161
4.5	2	5.8	Nylon	7.9	26.7	7.7	110H/ 5940-00-1139835	324918
4.5	2	6.4	Nylon	9.5	27.5	7.7	5940-99-6265052	35109
4.5	2	7.6	Nylon	9.5	29.8	7.7	5940-99-9468006	35364
4.5	2	6.4	Nylon	13.5	33.3	11.9	5940-99-9453908	150086
5	-	5.8	Nylon	9.5	19.1	7.7	5940-99-6611540	130167
5	-	5.8	Nylon	13.4	33.1	11.9	5940-99-7959315	130679
5	-	5.8	Nylon	9.5	26.3	7.7	5X/ 5940-99-6218297	150037-1
5	-	6.4	Nylon	9.5	19.1	7.7	5940-99-7402696	130171
6	0	5.8	Nylon	12.7	30.2	8.7	5940-99-9129235	35273
6	0	7.6	Nylon	12.7	32.4	8.7	110H/ 5940-01-2635619	323763
6	0	5.8	Nylon	13.5	33.6	11.9	5X/ 5940-99-7124984	320569
6	0	6.4	Nylon	13.5	33.6	11.9	5940-99-6449279	35110
6	0	7.6	Nylon	13.5	35.8	11.9	5940-99-2220639	35345
6	0	5.8	Nylon	13.5	33.0	11.6	5940-14-2563455	130667
8	5/16	5.8	Nylon	13.5	33.6	11.9	5X/ 5940-99-7124986	320576
8	5/16	5.8	Nylon	12.7	30.2	8.7	5940-99-6575440	324952
8	5/16	6.4	Nylon	13.5	33.6	11.9	5X/ 5940-99-9457634	35111
8	5/16	7.6	Nylon	13.5	35.8	11.9	10H/ 5940-99-9519039	35346

(continued)

TABLE 6 PIDG TERMINATIONS FOR CABLES: CMA 5,180 TO 13,100, CSA 2.63 TO 6.63MM², CABLE SIZE CODE 12 TO 10 (Continued)

Ring tongue (Continued)

Stud size mm	Stud size BA/in	Max. insul'n diam. mm	Sleeve type	Dimensions W mm	Dimensions L mm	Dimensions C mm	NATO Stock No. or Reference No.	AMP Part No.
9.5	3/8	5.8	Nylon	15.1	35.9	13.5	5940-99-2564597	320577
9.5	3/8	6.4	Nylon	15.1	35.9	13.5	5940-99-2523599	35112
9.5	3/8	7.6	Nylon	15.1	38.2	13.5	5940-00-8818147	35478
9.5	3/8	6.4	Nylon	19.1	40.5	15.9	5940-99-7981600	35150
10	-	5.8	Nylon	13.5	33.7	11.9	5X/ 5940-99-6218446	130690
10	-	6.4	Nylon	19.1	40.4	15.9	5940-99-4041697	160138
12	1/2	6.4	Nylon	19.1	40.5	15.9	5940-99-7717558	35151
12	1/2	5.8	Nylon	19.1	40.5	15.9	5X/ 5940-01-1963231	323784
12	1/2	5.8	Nylon	18.2	35.9	12.0	5940-00-6822445	52077
16	5/8	5.8	Nylon	31.8	56.4	25.4	5940-14-3547972	324615

Extended reach ring tongue

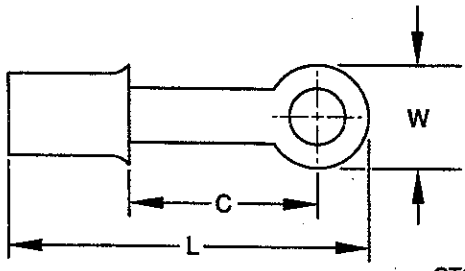

CTC/050

Stud size mm	Stud size BA/in	Max. insul'n diam. mm	Sleeve type	Dimensions W mm	Dimensions L mm	Dimensions C mm	NATO Stock No. or Reference No.	AMP Part No.
3/3.5	4	5.8	Nylon	6.4	30.6	11.9	5940-99-1041053	150320

Rectangular tongue

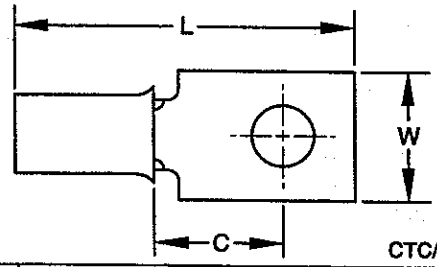

CTC/051

Stud size mm	Stud size BA/in	Max. insul'n diam. mm	Sleeve type	Dimensions W mm	Dimensions L mm	Dimensions C mm	NATO Stock No. or Reference No.	AMP Part No.
2.5	6	5.8	Nylon	6.0	30.6	10.3	5940-00-0120942	327966
2.5	6	5.8	Nylon	6.0	25.0	6.0	5940-01-0924224	327972
3	-	5.8	Nylon	7.0	26.5	7.0	5940-00-0824832	327954
3/3.5	4	5.8	Nylon	7.4	24.2	5.5	5X/ 5940-99-6255606	34512
3/3.5	4	5.8	Nylon	7.7	32.5	11.8	5940-00-8255041	327942
3/3.5	4	5.8	Nylon	6.4	27.6	7.7	5940-00-2048990	329697
4	3	5.8	Nylon	9.9	38.9	15.8	5940-00-8253695	327936
4	3	5.8	Nylon	7.7	32.5	11.8	5940-00-8253693	327948

TABLE 6 PIDG TERMINATIONS FOR CABLES: CMA 5,180 TO 13,100, CSA 2.63 TO 6.63MM², CABLE SIZE CODE 12 TO 10 (Continued)

Spade tongue

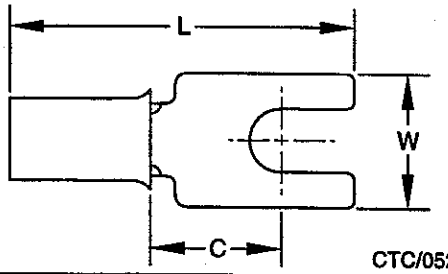

CTC/052

Stud size mm	Stud size BA/in	Max. insul'n diam. mm	Sleeve type	Dimensions W mm	Dimensions L mm	Dimensions C mm	NATO Stock No. or Reference No.	AMP Part No.
3/3.5	4	5.8	Nylon	7.4	24.2	5.5	5940-12-1974005	322985
4	3	5.8	Nylon	10.3	27.8	7.5	5940-00-8403373	32588
4.5	2	5.8	Nylon	10.3	27.8	7.5	5940-00-7275351	32589

Flanged spade tongue

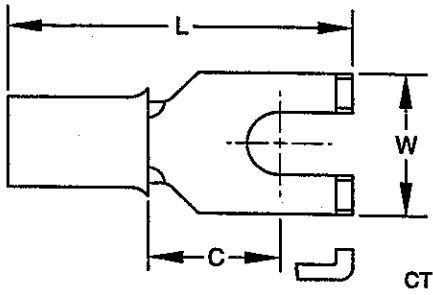

CTC/053

Stud size mm	Stud size BA/in	Max. insul'n diam. mm	Sleeve type	Dimensions W mm	Dimensions L mm	Dimensions C mm	NATO Stock No. or Reference No.	AMP Part No.
3/3.5	4	5.8	Nylon	7.5	25.8	6.4	5940-99-1080431	324577
3/3.5	4	6.3	Nylon	7.5	25.8	6.4	5940-00-8463997	325150
3/3.5	4	5.8	Nylon	8.3	25.8	6.4	5X/ 5940-01-2143477	324587
4	3	5.8	Nylon	10.6	25.8	6.4	110H/ 5940-00-6553918	32510
4.5	2	5.8	Nylon	10.6	25.8	6.4	5X/ 14302	326865
4.5	2	6.3	Nylon	10.6	25.8	6.4	5940-00-8468104	324015

TABLE 6 PIDG TERMINATIONS FOR CABLES: CMA 5,180 TO 13,100, CSA 2.63 TO 6.63MM², CABLE SIZE CODE 12 TO 10 (Continued)

Slotted ring tongue

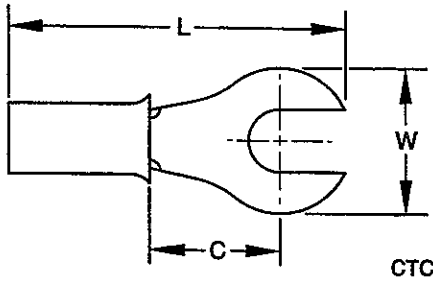

CTC/054

Stud size mm	Stud size BA/in	Max. insul'n diam. mm	Sleeve type	Dimensions W mm	Dimensions L mm	Dimensions C mm	NATO Stock No. or Reference No.	AMP Part No.
3/3.5	4	5.8	Nylon	9.5	27.0	7.1	5940-99-5490309	150252
6	0	5.8	Nylon	13.5	32.9	11.9	5X/ 5940-99-1046232	322218

Short spring spade tongue

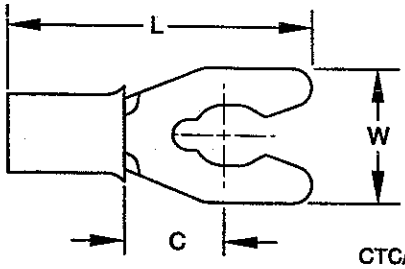

CTC/055

Stud size mm	Stud size BA/in	Max. insul'n diam. mm	Sleeve type	Dimensions W mm	Dimensions L mm	Dimensions C mm	NATO Stock No. or Reference No.	AMP Part No.
3/3.5	4	6.3	Nylon	6.4	24.4	4.4	110H/ 5940-01-1150742	52941
4	3	6.3	Nylon	9.5	26.7	7.0	5940-01-0787246	52942
6	0	6.3	Nylon	15.9	31.1	8.6	5940-01-2062929	52945

Wire pin

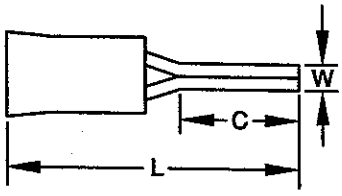

CTC/056

Stud size mm	Stud size BA/in	Max. insul'n diam. mm	Sleeve type	Dimensions W mm	Dimensions L mm	Dimensions C mm	NATO Stock No. or Reference No.	AMP Part No.
-	-	6.4	Nylon	2.6	29.0	9.9	5X/ 11216	165049
-	-	7.6	Nylon	2.6	29.0	9.9	5X/ 5940-99-0010269	165133

TABLE 6 PIDG TERMINATIONS FOR CABLES: CMA 5,180 TO 13,100, CSA 2.63 TO 6.63MM², CABLE SIZE CODE 12 TO 10 (Continued)

Butt splice

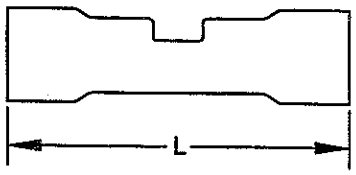

CTC/057

Stud size mm	Stud size BA/in	Max. insul'n diam. mm	Sleeve type	Dimensions W mm	Dimensions L mm	Dimensions C mm	NATO Stock No. or Reference No.	AMP Part No.
-	-	5.6	Nylon	-	42.1	-	5X/ 5940-14-2074372	320570

Step-down butt splice and adaptor

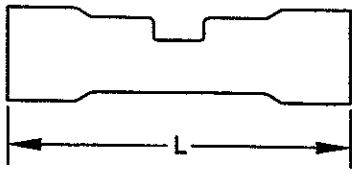

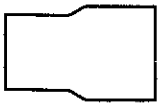

CTC/058

Cable size AWG From	Cable size AWG To	Max. insul'n diam. mm	Sleeve type	Dimensions W mm	Dimensions L mm	Dimensions C mm	NATO Stock No. or Reference No.	AMP Part No.
12-10	20-18	3.6-5.6	Nylon	-	42.1	-	5X/ 5940-99-6219982	327639
12-10	16.14	4.3-5.6	Nylon	-	42.1	-	5X/ 5940-99-6259732	327638

Step-down adaptor

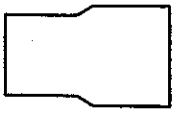

CTC/059

Cable size AWG From	Cable size AWG To	Max. insul'n diam. mm	Sleeve type	Dimensions W mm	Dimensions L mm	Dimensions C mm	NATO Stock No. or Reference No.	AMP Part No.
12-10	20-18	3.6	Nylon	-	-	-	5X/5940-99-1178870 (for use in butt splice 5X/5940-14-2074372, Part No. 320570)	327636
12-10	16-14	4.3	Nylon	-	-	-	5X/5940-99-1178869 (for use in butt splice 5X/5940-14-2074372, Part No. 320570)	327637

TABLE 6 PIDG TERMINATIONS FOR CABLES: CMA 5,180 TO 13,100, CSA 2.63 TO 6.63MM², CABLE SIZE CODE 12 TO 10 (Continued)

Knife disconnect

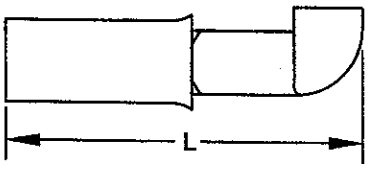

CTC/060

Stud size mm	Stud size BA/in	Max. insul'n diam. mm	Sleeve type	Dimensions W mm	Dimensions L mm	Dimensions C mm	NATO Stock No. or Reference No.	AMP Part No.
-	-	5.8	Nylon	-	32.0	-	5X/ 5940-99-6541841	320620

Ferrule

NOTE

Use handtool 5120-99-6353706, Part No. 575912-1, with this ferrule.

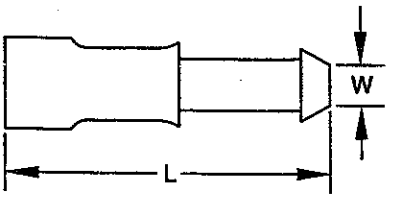

CTC/061

Stud size mm	Stud size BA/in	Max. insul'n diam. mm	Sleeve type	Dimensions W mm	Dimensions L mm	Dimensions C mm	NATO Stock No. or Reference No.	AMP Part No.
-	-	5.8	Nylon	4.1	23.8	-	5X/ 5940-99-7583691	150388

CHAPTER 2-1

AMP PRE-INSULATED DIAMOND GRIP (PIFG) TERMINATIONS FOR THIN WALL CABLES

CONTENTS

Para

Table Page

Fig

TERMINATIONS

Description

1 Pre-insulated DIAMOND GRIP (PIDG) terminations for thin wall (insulation) cables are similar in construction to the PIDG terminations described in Chapter 2-0, excepting that the insulation support sleeve assembly accepts only thin wall insulation cables.

2 Two ranges of terminations are available as follows:

2.1 PIDG STRATOTHERM for thin wall cable. A nickel-plated, PTFE insulated range for use up to 260°C (500°F). This temperature rating includes the ambient temperature plus a rise due to current.

2.2 PIDG for thin wall cable. A tin plated, nylon insulated range for use up to 105°C (221°F). This temperature rating includes the ambient temperature plus a rise due to current.

Size code

3 A cable size code, e.g. 24-22, is marked on the face of the tongue of each termination and on the associated tool. This code does not relate to the cable conductor size for service applications. The pre-insulated sleeve is colour coded according to the cable size code (see Tables 2 to 9). This colour is repeated on the handles of the associated tool to aid selection of the correct tool.

Dot code (see Fig 1)

4 During the crimping operation the stripped conductor and cable insulation are inserted into the barrel and sleeve of the termination. The termination is then crimped to both the conductor and its insulation. A specified dot code (see Tables 2 to 9) is impressed into the termination insulating sleeve to provide a means of checking, by the code's presence, that the correct tool/termination combination has been used.

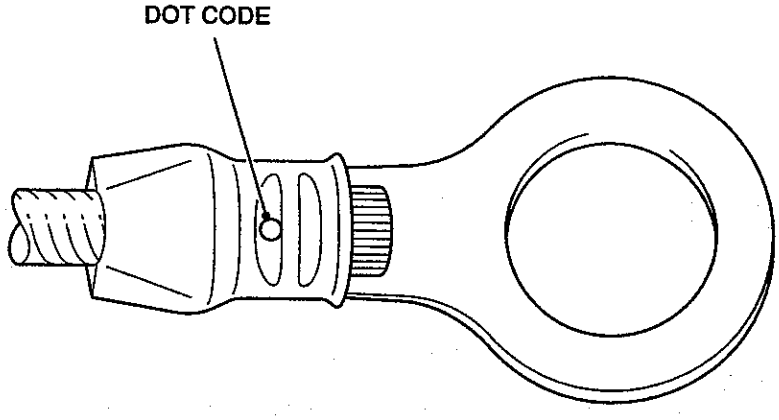

CTC/062

Fig 1 Dot code

NOTE

The dot code does not indicate that the correct cable/termination combination has been employed. This is decided by calculating the cable conductor size, as described in Chapter 1, then selecting the appropriate termination from the tables.

Insulation support

5 Cable insulation thickness for a given conductor size varies considerably. To ensure that the insulation will not be over or under crimped, the tools are provided with three insulation support crimp settings.

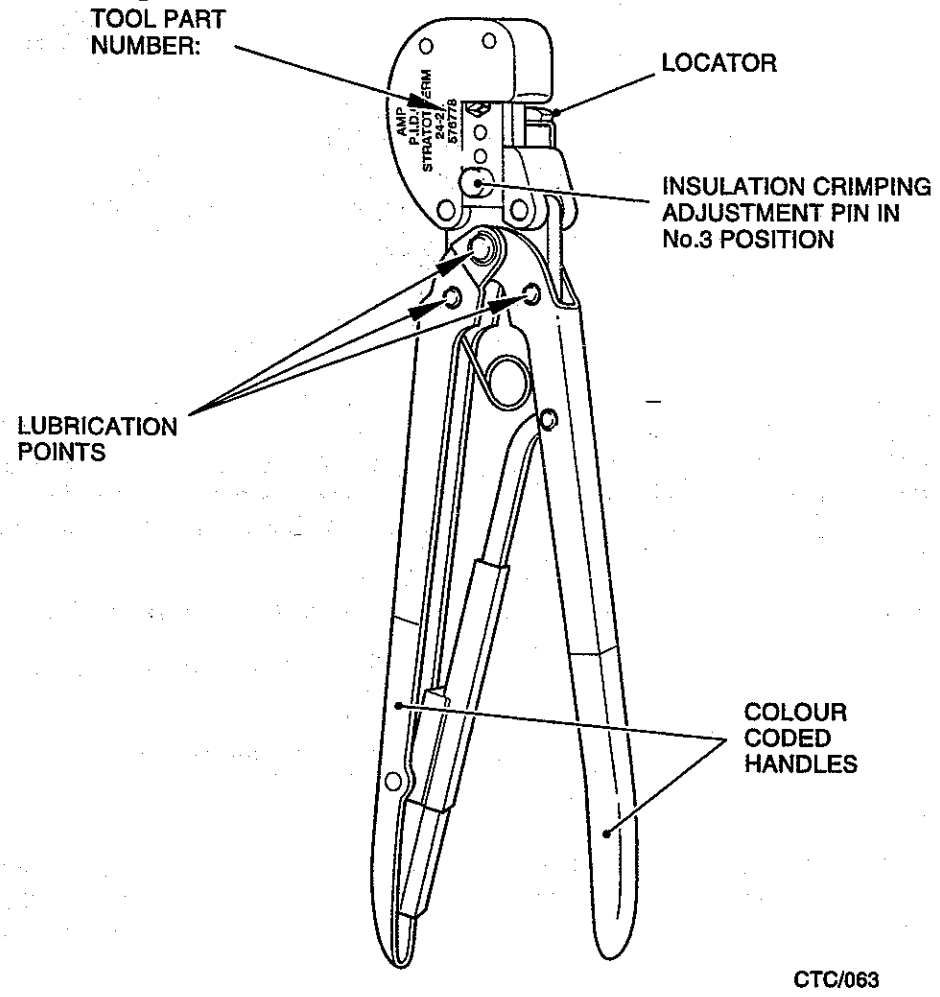

Fig 2 Typical PIDG hand-operated crimping tool for thin wall cable

TOOLS

Introduction

6 Six variants of the same type of hand crimping tool (Part Nos. 576778 to 576783) are used for crimping PIDG STRATOTHERM and PIDG terminations to thin wall cable in the cable size code ranges 24-22 to 12. The correct tool for each cable size code is detailed in the appropriate table.

Locator spares kits for thin wall cable hand-operated crimping tools

7 A locator spares kit is available for each of the hand-operated tools used for crimping PIDG STRATOTHERM and PIDG terminations to thin wall cable (see Table 1 for details).

TABLE 1 LOCATOR SPARES KITS FOR PIDG HAND-OPERATED CRIMPING TOOLS

Cable size code (1)	Hand tool Part No. (2)	Locator spares kit	
		NATO Stock No. or Reference No. (3)	AMP Part No. (4)
24 - 22	576788	1M/5120-99-7209016	1-525326-1
20	576779	1M/5120-99-7209016	1-525326-1
18	576780	1M/5120-99-6601966	1-525326-0
16	576781	1M/5120-99-6601966	1-525326-0
14	576782	1M/5120-99-6601966	1-525326-0
12	576783	1M/5120-99-6601966	1-525326-0

Insulation crimping adjustment

8 To ensure that when crimping a termination to a cable the cable insulation is not over or under crimped, the tool is provided with three insulation crimp setting positions. An adjustment pin is inserted into one of these positions. The correct position for the pin must be determined by testing prior to actually crimping the termination to the cable.

9 Set the tool initially by inserting the adjustment pin into position 3 and then proceed as follows:

9.1 Place the termination between the crimping jaws so that the barrel butts against the crimping tool locator.

9.2 Insert the unstripped cable into the insulation support sleeve of the termination.

9.3 Crimp the termination.

9.4 Remove the termination from the tool and check for correct crimping of the insulation support by holding the termination and bending the cable back and forth through 90 degrees and 180 degrees once only (see Fig 3). The termination should retain its grip on the cable insulation.

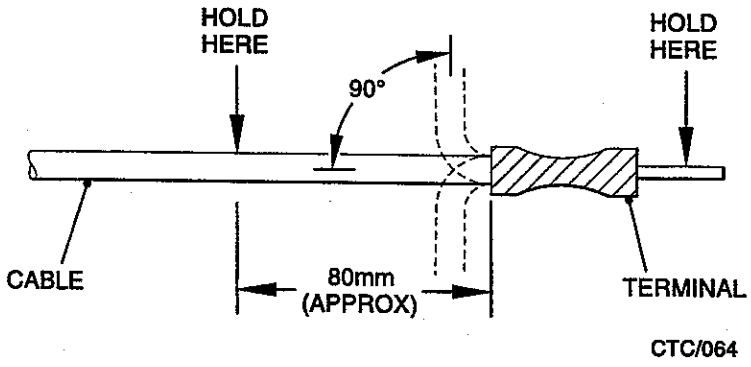

Fig 3 Insulation support test

9.5 If the cable pulls out during the bending test then insert the adjustment pin into the next lower position and repeat the test from Para 9.1 until the cable does not pull out.

Cable stripping

10 When stripping insulation from a conductor the correct tool and blade must be used, dependent on the type of insulation. Detailed information on cable stripping is given in AP 113D-1700-1. The wire must be stripped to the correct length (as specified in Tables 2 to 9). It is essential that the insulation is removed without damaging the conductor.

CRIMPING

Crimping procedure

11 Crimp a termination as follows:

11.1 Check that the crimping tool is registered with the PTT NCO.

11.2 Open the crimping jaws by squeezing the handles until the ratchet releases. The jaws then open automatically.

11.3 Place the termination in the crimping jaws so that the barrel butts against the crimping tool locator.

11.4 Squeeze the handles until the termination is just held in place by the ratchet. Do not deform the termination.

11.5 Insert the correctly stripped cable into the termination barrel.

11.6 Hold the cable in position and complete the crimp by squeezing the handles until the ratchet releases.

Inspecting the crimp

12 Inspect the crimp as described below:

12.1 Check that the correct dot code is clearly impressed into the terminal insulation sleeve.

12.2 Check that the conductor does not protrude from the barrel.

USE OF TABLES

13 Tables 2 to 9 contain all the information necessary to identify the correct termination for a particular application together with its reference number. The cable stripping length is shown for each termination and also the correct tool with its dot code.

14 The cable size code is included in the tables for reference only. The actual conductor size, circular mil area (CMA) and cross sectional area (CSA) must be determined either by measurement or by reference to specifications.

15 Before referring to the tables the following information is required. This must be obtained either by measurement or from specifications (check both where confusion may exist).

15.1 Cable conductor CMA or CSA (refer to Chapter 1) and cable insulation overall diameter.

15.2 Termination type, stud size and dimensions.

16 With the information at Para 15, identify the appropriate table. From the illustrations locate the required section of the table. Then by reference to stud size, cable insulation range, etc the termination reference number is obtained. Stripping length and crimping tool details are specified in each table header and apply to all the terminations listed in that table.

TABLE 2 PIDG STRATOTHERM TERMINATIONS FOR THIN WALL CABLES: CMA 320 TO 812, CSA 0.162 TO 0.41 MM², CABLE SIZE CODE 24 TO 22

Terminal/tool colour	: Brown	Tool Colour	: Black/brown
Cable size code	: 24 - 22	Tool Ref No.	: 1M/5120-99-1384809
Dot code	: Two dots	Tool Part No.	: 576778
Cable strip length	: 5.5 to 6.5 mm		

Ring tongue

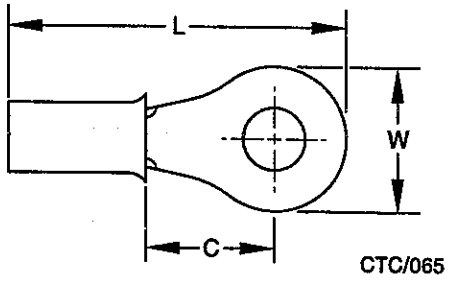

Stud size mm	Stud size BA/in	Insul'n diam. mm	Dimensions W mm	Dimensions L mm	Dimensions C mm	NATO Stock No. or Reference No.	AMP Part No.
2.5	6	0.9 - 1.9	5.5	16.7	3.8	5X/ 5940-99-7387721	152642
2.5	6	0.9 - 1.9	7.1	20	6.2	5X/ 5940-14-3162466	152644
2.5	6	0.9 - 1.9	5.5	19.1	6.2	5X/ 5940-99-7432207	152648
3/3.5	4	0.9 - 1.9	5.5	16.7	3.8	5X/ 5940-99-2529042	152643
3/3.5	4	0.9 - 1.9	7.1	20	6.2	5X/ 5940-99-6329468	152645
4	3	0.9 - 1.9	7.1	20	6.2	5X/ 5940-99-7432206	152646
5	2	0.9 - 1.9	7.1	20	6.2	5X/ 5940-99-7421010	152647

TABLE 3 PIDG TERMINATIONS FOR THIN WALL CABLES: CMA 320 TO 812, CSA 0.162 TO 0.41 MM², CABLE SIZE CODE 24 TO 22

Terminal/tool colour	: Black	Tool Colour	: Black/brown
Cable size code	: 24 - 22	Tool Ref No.	: 1M/5120-99-1384809
Dot code	: Two dots	Tool Part No.	: 576778
Cable strip length	: 5.5 to 6.5 mm		

Ring tongue

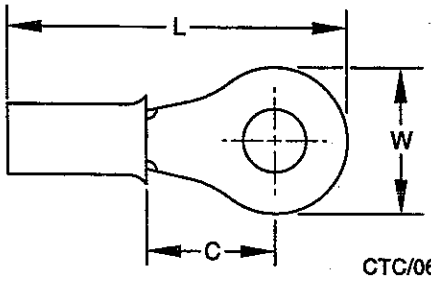

CTC/066

Stud size mm	Stud size BA/in	Insul'n diam. mm	Dimensions W mm	Dimensions L mm	Dimensions C mm	NATO Stock No. or Reference No.	AMP Part No.
2	8	0.9 - 1.9	5.5	13.9	4.0	5X/ 5940-99-6476935	151535
2.5	6	0.9 - 1.9	5.5	13.9	4.0	5X/ 5940-99-0011659	151436
2.5	6	0.9 - 1.9	7.1	19.9	6.4	5X/ 5940-99-0011660	151438
2.5	6	0.9 - 1.9	5.5	19.0	6.4	5X/ 5940-99-0011662	151458
3.5	4	0.9 - 1.9	5.5	13.9	4.0	5X/ 5940-99-6476934	151437
3/3.5	4	0.9 - 1.9	7.1	19.9	6.4	5X/ 5940-99-0011661	151439
4	3	0.9 - 1.9	7.1	19.9	6.4	5X/ 5940-99-0011991	151440
5	2	0.9 - 1.9	7.1	19.9	6.4	5X/ 5940-99-0015014	151441

Colour of band - Black

Butt splice

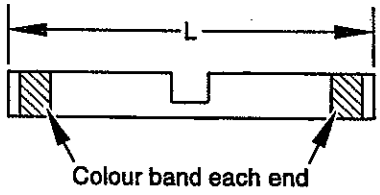

CTC/067

Stud size mm	Stud size BA/in	Insul'n diam. mm	Dimensions W mm	Dimensions L mm	Dimensions C mm	NATO Stock No. or Reference No.	AMP Part No.
-	-	0.9 - 1.9	-	29	-	5X/ 5940-99-6409713	153400

TABLE 4 PIDG STRATOTHERM TERMINATIONS FOR THIN WALL CABLES: CMA 812 TO 1,290, CSA 0.412 TO 0.65 MM², CABLE SIZE CODE 20

Terminal/tool colour	: Grey	Tool Colour	: Purple/grey
Cable size code	: 20	Tool Ref No.	: 1M/5120-99-1384810
Dot code	: One dot	Tool Part No.	: 576779
Cable strip length	: 5.5 to 6.5 mm		

Ring tongue

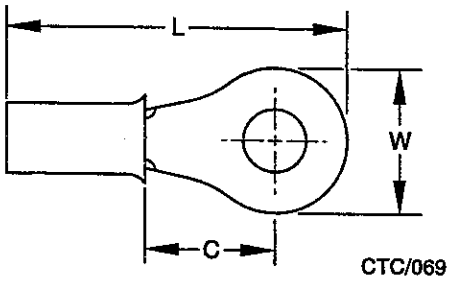

Stud size mm	Stud size BA/in	Insul'n diam. mm	Dimensions W mm	Dimensions L mm	Dimensions C mm	NATO Stock No. or Reference No.	AMP Part No.
2.5	6	1.1 - 2.0	5.5	17.3	3.8	5X/ 5940-99-6329470	152659
3/3.5	4	1.1 - 2.0	7.1	20	6.2	10H/ 5940-99-7977587	152655
4	3	1.1 - 2.0	7.1	20	6.2	5X/ 5940-99-6503166	152656
5	2	1.1 - 2.0	7.1	20	6.2	5X/ 5940-99-6503167	152657
9.5	3/8	1.1 - 2.0	11.9	27.6	10.9	5X/ 5940-14-4563345	152663

Rectangular tongue

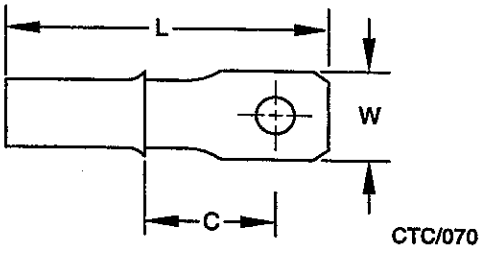

Stud size mm	Stud size BA/in	Insul'n diam. mm	Dimensions W mm	Dimensions L mm	Dimensions C mm	NATO Stock No. or Reference No.	AMP Part No.
2.5	6	1.1 - 2	5.5	19	6.2	5940-99-6503165	153493

TABLE 5 PIDG TERMINATIONS FOR THIN WALL CABLES: CMA 812 TO 1,290, CSA 0.412 TO 0.65 MM², CABLE SIZE CODE 20

Terminal/tool colour	: Purple	Tool Colour	: Purple/grey
Cable size code	: 20	Tool Ref No.	: 1M/5120-99-1384810
Dot code	: One dot	Tool Part No.	: 576779
Cable strip length	: 5.5 to 6.5 mm		

Ring tongue Colour of stripe - Red

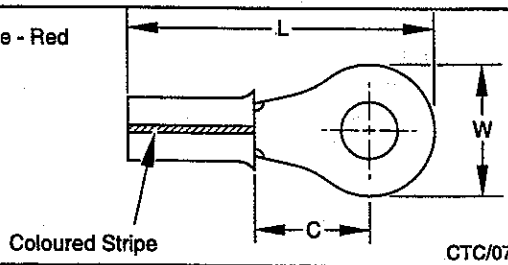

CTC/071

Stud size mm	Stud size BA/in	Insul'n diam. mm	Dimensions W mm	Dimensions L mm	Dimensions C mm	NATO Stock No. or Reference No.	AMP Part No.
2	8	1.1 - 2.0	5.5	14.0	3.4	5X/ 5940-99-6541837	152899
2.5	6	1.1 - 2.0	5.5	16.8	3.4	5X/ 5940-99-6204096	152898
2.5	6	1.1 - 2.0	6.1	22.4	8.5	5X/ 5940-99-6476941	154924
3.5	4	1.1 - 2.0	7.1	20	5.7	5X/ 5940-99-6420575	152895
3.5	4	1.1 - 2.0	6.4	22.4	8.5	5X/ 5940-99-6476936	152896
4	3	1.1 - 2.0	5.5	14.0	3.4	5X/ 5940-99-6476943	152897
4	3	1.1 - 2.0	7.1	20	5.7	5X/ 5940-99-6420590	152894
5	2	1.1 - 2.0	7.9	21.2	6.5	5X/ 5940-99-7183520	152891
5	2	1.1 - 2.0	7.1	20	5.7	5X/ 5940-99-6424434	152892
6	0	1.1 - 2.0	11.9	27.1	10.5	5X/ 5940-99-6368749	152890
9.5	3/8	1.1 - 2.0	11.9	27.1	10.5	5X/ 5940-99-6507632	152888

Butt splice Colour of band - Purple

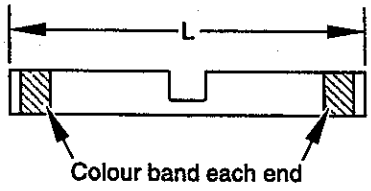

CTC/072

Stud size mm	Stud size BA/in	Insul'n diam. mm	Dimensions W mm	Dimensions L mm	Dimensions C mm	NATO Stock No. or Reference No.	AMP Part No.
-	-	1.1 - 2	-	29	-	5X/ 5940-99-6409714	153401

Wire pin

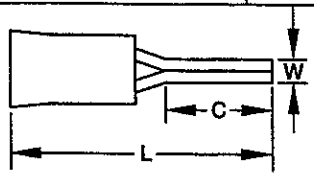

CTC/073

Stud size mm	Stud size BA/in	Insul'n diam. mm	Dimensions W mm	Dimensions L mm	Dimensions C mm	NATO Stock No. or Reference No.	AMP Part No.
-	-	1.1 - 2	-	20	-	5940-99-7266099	343279-1

TABLE 6 PIDG STRATOTHERM TERMINATIONS FOR THIN WALL CABLES: CMA 1,290 TO 3,260, CSA 0.651 TO 1.64 MM², CABLE SIZE CODE 18 TO 16

Terminal colour	: Orange	Tool Ref No., size 18	: 1M/5120-99-1384811
Tool colour, size 18	: Black/orange	Tool Part No. size 18	: 576780
Tool colour, size 16	: Orange/orange	Tool Ref No., size 16	: 1M/5120-99-1384812
Cable size code	: 18 - 16	Tool Part No. size 16	: 576781
Dot code, size 18	: Two dots		
Dot code, size 16	: One dot		
Cable strip length	: 5.5 to 6.5 mm		

Ring tongue

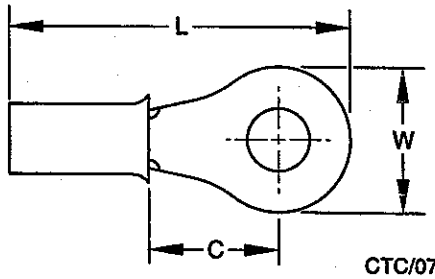

CTC/074

Stud size mm	Stud size BA/in	Insul'n diam. mm	Dimensions W mm	Dimensions L mm	Dimensions C mm	NATO Stock No. or Reference No.	AMP Part No.
2.5	6	1.4 - 2.7	5.5	17.3	3.8	5X/ 5940-99-6422967	153103
6	0	1.4 - 2.7	11.9	27.6	10.9	5X/ 5940-99-7583675	153107

TABLE 7 PIDG TERMINATIONS FOR THIN WALL CABLES: CMA 1,290 TO 3,260, CSA 0.651 TO 1.64 MM², CABLE SIZE CODE 18 TO 16

Terminal colour	: Orange	Tool Ref No., size 18	: 1M/5120-99-1384811
Tool colour, size 18	: Black/orange	Tool Part No. size 18	: 576780
Tool colour, size 16	: Orange/orange	Tool Ref No., size 16	: 1M/5120-99-1384812
Cable size code	: 18 - 16	Tool Part No. size 16	: 576781
Dot code, size 18	: Two dots		
Dot code, size 16	: One dot		
Cable strip length	: 5.5 to 6.5 mm		

Ring tongue

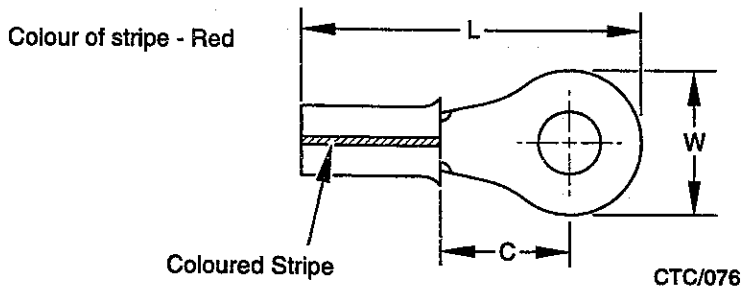

Stud size mm	Stud size BA/in	Insul'n diam. mm	Dimensions W mm	Dimensions L mm	Dimensions C mm	NATO Stock No. or Reference No.	AMP Part No.
2.5	6	1.4 - 2.7	5.5	17.3	3.4	5X/ 5940-99-6368748	152887
2.5	6	1.4 - 2.7	6.1	22.9	8.5	5X/ 5940-99-6483048	154927
3/3.5	4	1.4 - 2.7	7.1	20.5	5.7	5X/ 5940-99-6366941	152884
3/3.5	4	1.4 - 2.7	6.4	22.9	8.5	5X/ 5940-99-6476937	152885
3/3.5	4	1.4 - 2.7	5.5	17.3	3.4	5X/ 5940-99-6541838	152886
4	3	1.4 - 2.7	7.9	21.6	6.5	5940-99-7506853	152882
4	3	1.4 - 2.7	7.1	20.5	5.7	5X/ 5940-99-6368747	152883
5	2	1.4 - 2.7	7.9	21.6	6.5	5X/ 5940-99-7386662	152880
5	2	1.4 - 2.7	7.1	20.5	5.7	5X/ 5940-99-7193731	152881
6	0	1.4 - 2.7	11.9	27.6	10.5	5X/ 5940-99-6541839	152879
8	5/16	1.4 - 2.7	11.9	27.6	10.5	5X/ 5940-99-6476939	152878
9.5	3/8	1.4 - 2.7	13.5	31.1	13.3	5X/ 5940-99-6507631	152877

TABLE 8 PIDG STATOTHERM TERMINATIONS FOR THIN WALL CABLES: CMA 3,260 TO 8,154, CSA 1.65 TO 4.13 MM², CABLE SIZE CODE 14 TO 12

Terminal colour	: White	Tool Ref No., size 14	: 1M/5120-99-1384813
Tool colour, size 18	: Black/white	Tool Part No. size 14	: 576782
Tool colour, size 16	: White/white	Tool Ref No., size 12	: 1M/5120-99-1384814
Cable size code	: 14 - 12	Tool Part No. size 12	: 576783
Dot code, size 18	: Two dots		
Dot code, size 16	: One dot		
Cable strip length	: 5.5 to 6.5 mm		

Ring tongue

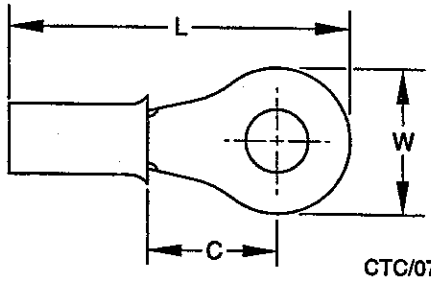

CTC/078

Stud size mm	Stud size BA/in	Insul'n diam. mm	Dimensions W mm	Dimensions L mm	Dimensions C mm	NATO Stock No. or Reference No.	AMP Part No.
2.5	6	2.3 - 3.2	6.4	18.1	4.1	-	153110
3/3.5	4	2.3 - 3.2	6.4	18.1	4.1	5X/ 5476368	153111
4	3	2.3 - 3.2	8.7	22.0	6.9	-	153112
5	2	2.3 - 3.2	8.7	22.0	6.9	-	153113
6	0	2.3 - 3.2	11.9	27.6	10.9	5X/ 5940-99-6343373	153114
8	5/16	2.3 - 3.2	11.9	27.6	10.9	-	153115
9.5	3/8	2.3 - 3.2	13.5	30.8	13.3	-	153116

TABLE 9 PIDG TERMINATIONS FOR THIN WALL CABLES: CMA 3,260 TO 8,154, CSA 1.65 TO 4.13 MM², CABLE SIZE CODE 14 TO 12

Terminal colour	: White	Tool Ref No., size 14	: 1M/5120-99-1384813
Tool colour, size 18	: Black/white	Tool Part No. size 14	: 576782
Tool colour, size 16	: White/white	Tool Ref No., size 12	: 1M/5120-99-1384814
Cable size code	: 14 - 12	Tool Part No. size 12	: 576783
Dot code, size 18	: Two dots		
Dot code, size 16	: One dot		
Cable strip length	: 5.5 to 6.5 mm		

Ring tongue

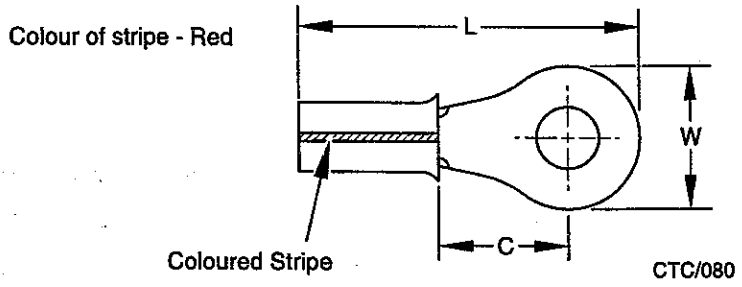

Stud size mm	Stud size BA/in	Insul'n diam. mm	Dimensions W mm	Dimensions L mm	Dimensions C mm	NATO Stock No. or Reference No.	AMP Part No.
2.5	6	2.3 - 3.2	6.4	18.1	3.7	5X/ 5940-99-6476946	152876
2.5	6	2.3 - 3.2	6.1	24.7	10.5	5X/ 5940-99-6476940	154930
3/3.5	4	2.3 - 3.2	8.7	22.0	6.5	5X/ 5940-99-7848668	152874
3/3.5	4	2.3 - 3.2	6.4	18.1	3.7	5X/ 5940-99-6204097	152875
4	3	2.3 - 3.2	8.7	22.0	6.5	5X/ 5940-99-6424415	152873
5	2	2.3 - 3.2	8.7	22.0	6.5	5X/ 5940-99-6541840	152872
6	0	2.3 - 3.2	11.9	27.6	10.5	5X/ 5940-99-6645470	152871
8	5/16	2.3 - 3.2	11.9	27.6	10.5	5X/ 5940-99-7506851	152870

Wire pin

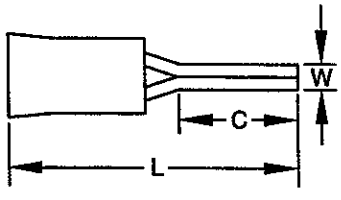

CTC/081

Stud size mm	Stud size BA/in	Insul'n diam. mm	Dimensions W mm	Dimensions L mm	Dimensions C mm	NATO Stock No. or Reference No.	AMP Part No.
-	-	2.3 - 3.2	-	20	-	5940-99-7266100	343281-1

CHAPTER 2-2

AMP THERMOCOUPLE DIAMOND GRIP TERMINATIONS

CONTENTS

TERMINATIONS

Description

1 Thermocouple DIAMOND GRIP terminations are manufactured by AMP of GB Limited. There are two types of termination - Alumel, which has a green uninsulated sleeve; and chromel, which has a grey uninsulated sleeve. They are compatible with aluminium/nickel (negative) and chromium/nickel (positive thermocouple cables respectively.

2 Each termination consists of a one-piece tongue and barrel which accepts a cable conductor, over which an unisulated insulation support sleeve is permanently secured. Terminations of cable size codes 22 to 16 are tested to 260°C (BS G200 refers). Other cable sizes are rated at 650°C but are not tested. The barrel, tongue and sleeve of a particular termination type are of similar alloy. The two types can be identified by the sleeve colour (either green or grey) and the letters AL (for alumel) or CH (for chromel) following the size code on the underside of the tongue.

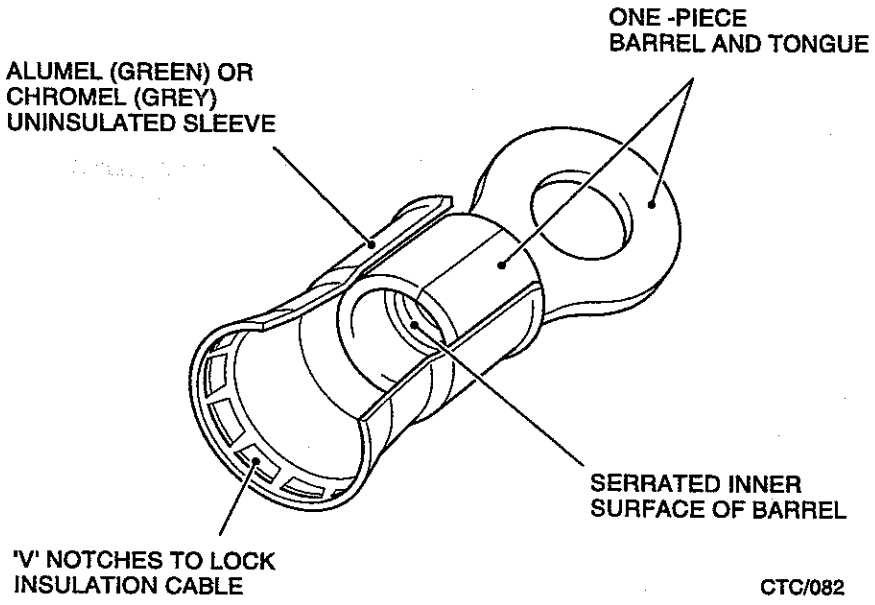

Fig 1 Construction of alumel and chromel thermocouple terminations

Size code

3 A cable size code, e.g. 12-10, is marked on the underside of the tongue of each termination and on the associated tool. This code does not relate to the cable conductor size for service applications (see Chapter 1).

Dash code (Fig 2)

4 A dash code, also known as a hash mark, (see Tables 1 to 3) may be impressed into the underside of the termination support sleeve. The code's presence, or absence, indicates that the correct tool/termination combination has been used.

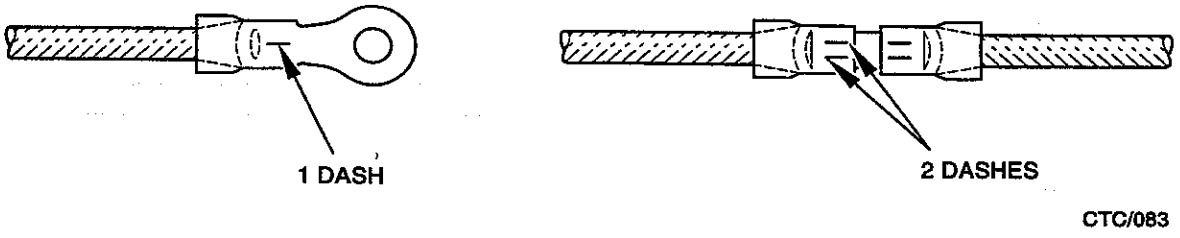

Fig 2 Dash code

NOTE

The dash code does not indicate that the correct cable/termination combination has been employed. This is decided by calculating the cable conductor size, as described in Chapter 1, then selecting the appropriate termination from the tables.

TOOLS

Introduction

5 Two types of hand crimping tool may be used for crimping thermocouple DIAMOND GRIP terminations - an 'A' frame type and a 'B' frame type (see Fig 3). The following description of how to adjust and operate tools applies to both types.

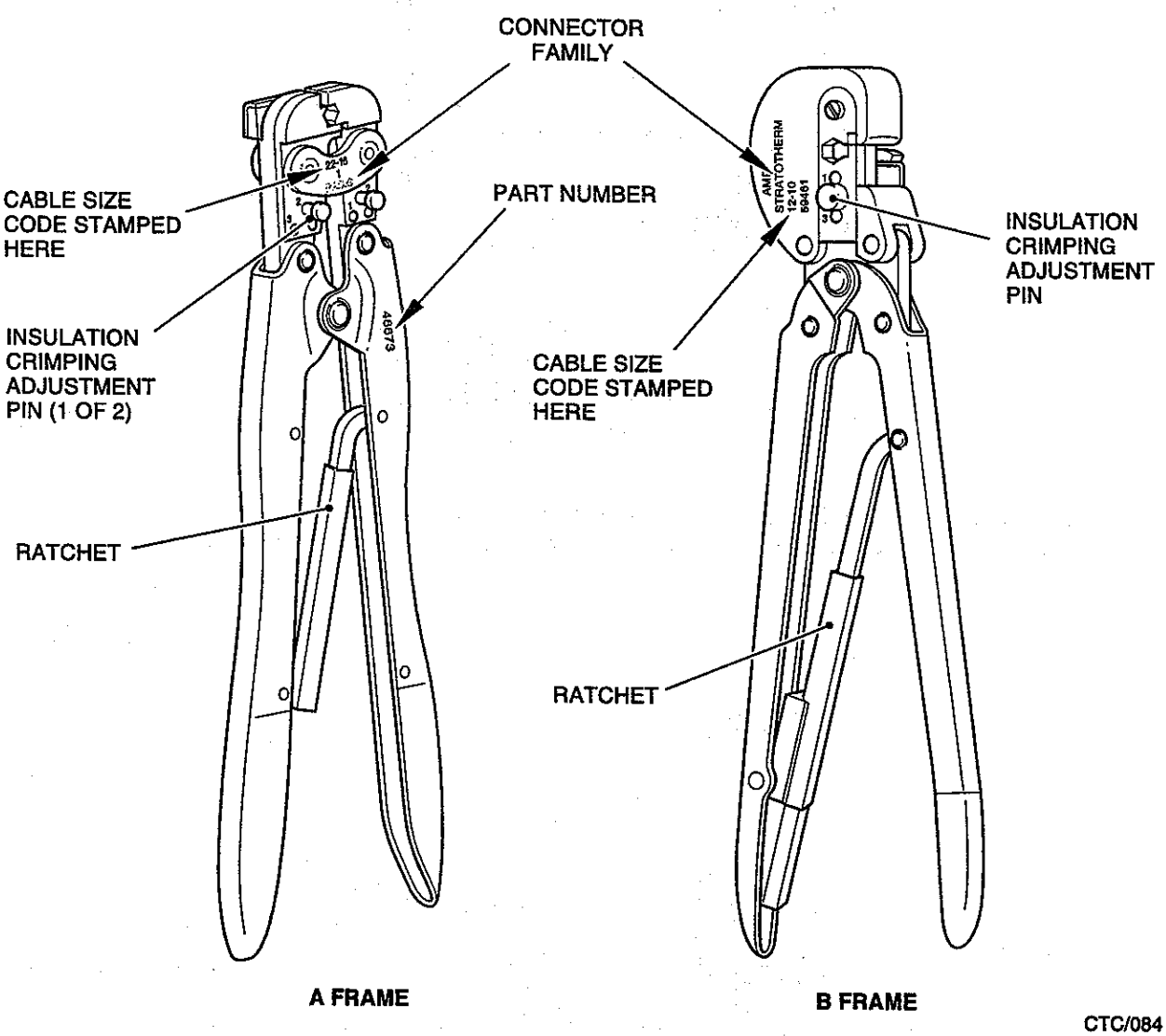

Fig 3 Hand-operated crimping tools

Insulation crimping adjustment

6 To ensure that when crimping a termination to a cable the cable insulation is not over or under crimped, the tool is proved with three insulation crimp setting positions. An adjustment pin, or pins, are inserted into one of these positions. The correct position for the pin must be determined by testing prior to actually crimping the termination to the cable.

7 Set the tool initially by inserting the adjustment pin or pins into position 3 and then proceed as follows:

7.1 Place the termination between the crimping jaws as shown in either Fig 4 or Fig 5.

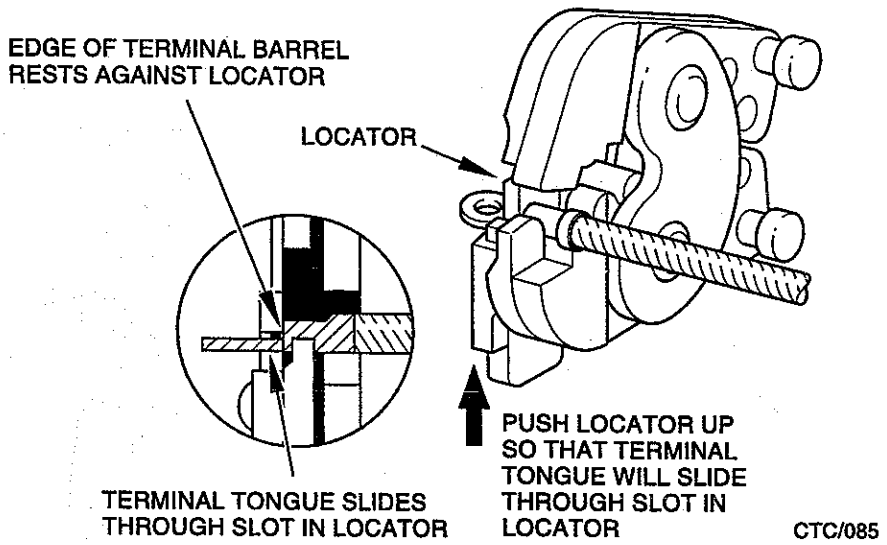

Fig 4 Correct location of termination tongue in crimping tool

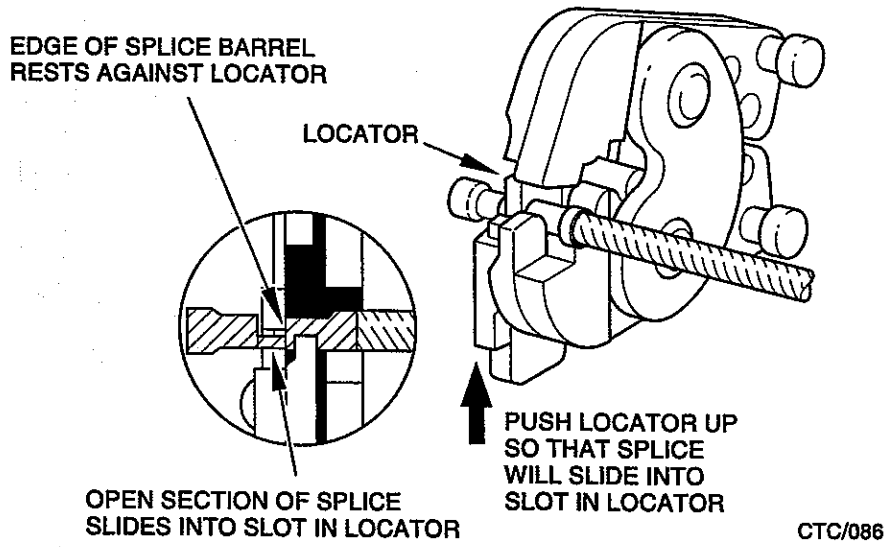

Fig 5 Correct location of butt splice in crimping tool

7.2 Insert the unstripped cable into the insulation support sleeve of the termination.

7.3 Crimp the termination.

7.4 Remove the termination from the tool and check for correct crimping of the insulation support by holding the termination and bending the cable back and forth through 90 degrees and 180 degrees once only (see Fig 6). The termination should retain its grip on the cable insulation.

7.5 If the cable pulls out during the bending test then insert the adjustment pin or pins into the next lower position and repeat the test from Para 7.1 until the cable does not pull out.

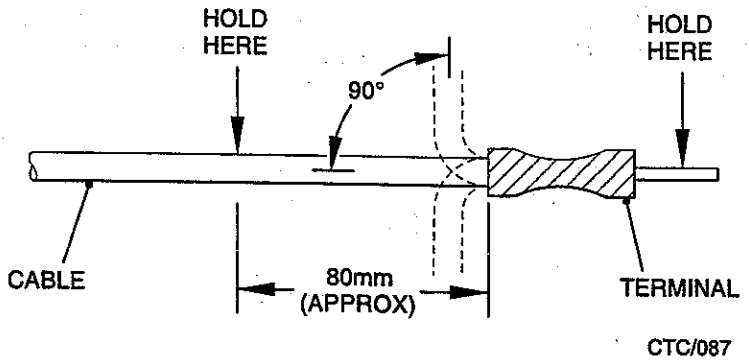

Fig 6 Insulation support test

Cable stripping

8 When stripping insulation from a conductor the correct tool and blade must be used, dependent on the type of insulation. Detailed information on cable stripping is given in AP 113D-1700-1. The wire must be stripped to the correct length (as specified in Tables 1 to 3). It is essential that the insulation is removed without damaging the conductor.

CRIMPING

Crimping procedure

9 The following procedure applies to both types of hand crimping tools (see Fig 3).

9.1 Check that the crimping tool is registered with the PTT NCO.

9.2 Open the crimping jaws by squeezing the handles until the ratchet releases. The jaws then open automatically.

9.3 Place the termination in the crimping jaws (see Fig 4 or Fig 5) so that the barrel butts against the locator as shown.

9.4 Squeeze the handles until the termination is just held in place by the ratchet. Do not deform the termination.

9.5 Insert the correctly stripped cable into the termination barrel.

9.6 Hold the cable in position and complete the crimp by squeezing the handles until the ratchet releases.

Inspecting the crimp

10 Inspect the crimp as described below:

10.1 Check that the correct dash code is clearly impressed into the terminal insulation sleeve.

10.2 Check that the conductor protrudes approximately 0.8 mm (1/32 in) from the barrel.

USE OF TABLES

11 Tables 1 to 3 contain all the information necessary to identify the correct termination for a particular application together with its reference number. The cable stripping length is shown for each termination and also the correct tool with its dash code.

12 The cable size code is included in the tables for reference only. The actual conductor size, circular mil area (CMA) and cross sectional area (CSA) must be determined either by measurement or by reference to specifications.

13 Before referring to the tables the following information is required. This must be obtained either by measurement or from specifications (check both where confusion may exist).

13.1 Cable conductor CMA or CSA (refer to Chapter 1) and cable insulation overall diameter.

13.2 Termination type, stud size and dimensions.

14 With the information at Para 13, identify the appropriate table. From the illustrations locate the required section of the table. Then by reference to stud size, cable insulation range, etc the termination reference number is obtained. Stripping length and crimping tool details are specified in each table header and apply to all the terminations listed in that table.

TABLE 1 THERMOCOUPLE TERMINATIONS FOR CABLES: CMA 509 TO 3,260, CSA 0. 26 TO 1.65 MM², CABLE SIZE CODE 22 TO 16

NOTE

Termination colours are: ALUMEL - GREEN
CHROMEL - GREY

Cable size code		: 22 - 16	Tool Ref No.	:	1M/5120-99-1240764
Strip length	- tongue	: 4.4 to 5.2 mm	Tool Part No.	:	46673
	- splice	: 6.4 to 7 mm	Dash code	:	1

Ring tongue

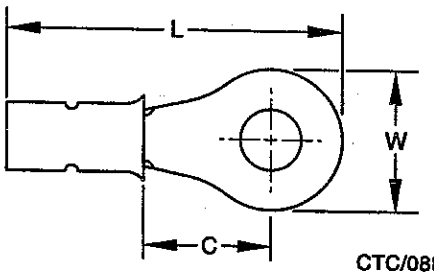

CTC/088

Stud size mm	Stud size BA/in	Insul'n diam. mm	Term'n type	Dimensions W mm	Dimensions L mm	Dimensions C mm	NATO Stock No. or Reference No.	AMP Part No.
3.5	4	2.7 - 3.5	chromel	7.9	19.7	7.1	5X/ 5940-99-1144824	2-322873-1
4	3	2.7 - 3.5	alumel	7.9	19.7	7.1	5X/ 5940-99-1125822	1-321897-3
4	3	2.7 - 3.5	chromel	7.9	19.7	7.1	5X/ 11792	1-321897-0
5	2	2.7 - 3.5	alumel	7.9	19.7	7.1	5X/ 5940-99-4501651	1-321898-0
5	2	2.7 - 3.5	chromel	7.9	19.7	7.1	-	1-321987-4

Butt splice

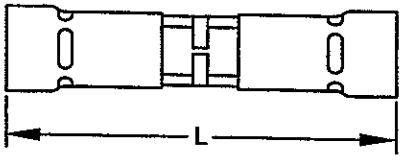

CTC/089

Stud size mm	Stud size BA/in	Insul'n diam. mm	Term'n type	Dimensions W mm	Dimensions L mm	Dimensions C mm	NATO Stock No. or Reference No.	AMP Part No.
-	-	2.7 - 3.5	alumel	-	21.3	-	5940-01-1413667	1-322325
-	-	2.7 - 3.5	chromel	-	21.3	-	5940-01-1413668	1-322325-1

TABLE 2 THERMOCOUPLE TERMINATIONS FOR CABLES: CMA 2,050 TO 5,180, CSA 1.04 TO 2.6 MM², CABLE SIZE CODE 16 TO 14

NOTE

Termination colours are: ALUMEL - GREEN
CHROMEL - GREY

Cable size code	: 16 - 14		Tool Ref No.	:	1M/5120-99-1240765
Strip length - tongue	: 4.4 to 5.2 mm		Tool Part No.	:	46988
- splice	: 6.4 to 7 mm		Dash code	:	2

Ring tongue

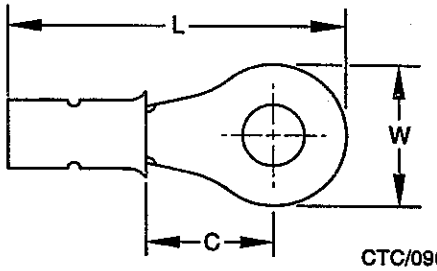

CTC/090

Stud size mm	Stud size BA/in	Insul'n diam. mm	Term'n type	Dimensions W mm	Dimensions L mm	Dimensions C mm	NATO Stock No. or Reference No.	AMP Part No.
4	3	3.5 - 5	alumel	8.7	20.2	7.1	5X/ 5940-00-8785893	1-322338-1
4	3	3.5 - 5	chromel	8.7	20.2	7.1	5X/ 5940-99-6255609	1-322337-0
5	2	3.5 - 5	alumel	8.7	20.2	7.1	5X/ 5940-99-6255610	1-322338-0
5	2	3.5 - 5	chromel	8.7	20.2	7.1	5X/ 5940-99-1125823	1-322337-1

Butt splice

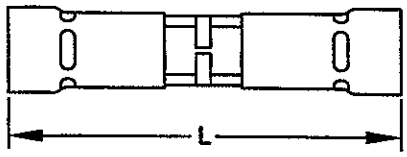

CTC/091

Stud size mm	Stud size BA/in	Insul'n diam. mm	Term'n type	Dimensions W mm	Dimensions L mm	Dimensions C mm	NATO Stock No. or Reference No.	AMP Part No.
-	-	3.5 - 5	alumel	-	21.8	-	-	1-322346-0
-	-	3.5 - 5	chromel	-	21.8	-	-	1-322346-1

TABLE 3 THERMOCOUPLE TERMINATIONS FOR CABLES: CMA 5,180 TO 13,100, CSA 2.63 TO 6.63 MM², CABLE SIZE CODE 12 TO 10

NOTE

Termination colours are: ALUMEL - GREEN
CHROMEL - GREY

Cable size code	: 12 - 10	Tool Ref No.	: 1M/5120-99-1240766
Strip length - tongue	: 6.4 to 7 mm	Tool Part No.	: 59461
- splice	: 8.7 to 9.5 mm	Dash code	: Nil

Ring tongue

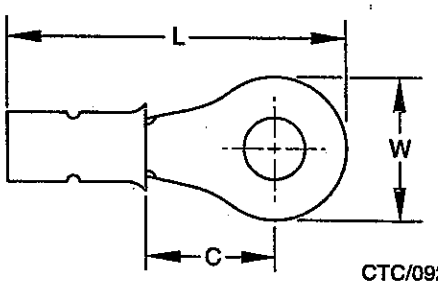

CTC/092

Stud size mm	Stud size BA/in	Insul'n diam. mm	Term'n type	Dimensions W mm	Dimensions L mm	Dimensions C mm	NATO Stock No. or Reference No.	AMP Part No.
4	3	3.8 - 5.8	alumel	9.5	25	7.1	5940-00-8785898	2-323750-3
4	3	3.8 - 5.8	chromel	9.5	25	7.1	5940-99-8785892	2-323749-1
5	2	3.8 - 5.8	alumel	9.5	25	7.1	-	2-323750-1
5	2	3.8 - 5.8	chromel	9.5	25	7.1	-	2-323749-3

CHAPTER 2-3

AMP AMPLIBOND PRE-INSULATED RING TONGUE TERMINATIONS

CONTENTS

TERMINATIONS

Description

1 AMPLIBOND pre-insulated terminations are manufactured by AMP of GB Limited. There are designed to fit the larger cable ranges in the size range 8 to 4/0 American Wire Gauge (AWG). The tables in this chapter cover this range.

2 Each termination consists of a one-piece, tin-plated annealed copper tongue and barrel which accepts a cable conductor. The barrel is covered by a thin copper sleeve, to which is bonded a vinyl sleeve. The terminations are temperature rated to 105°C.

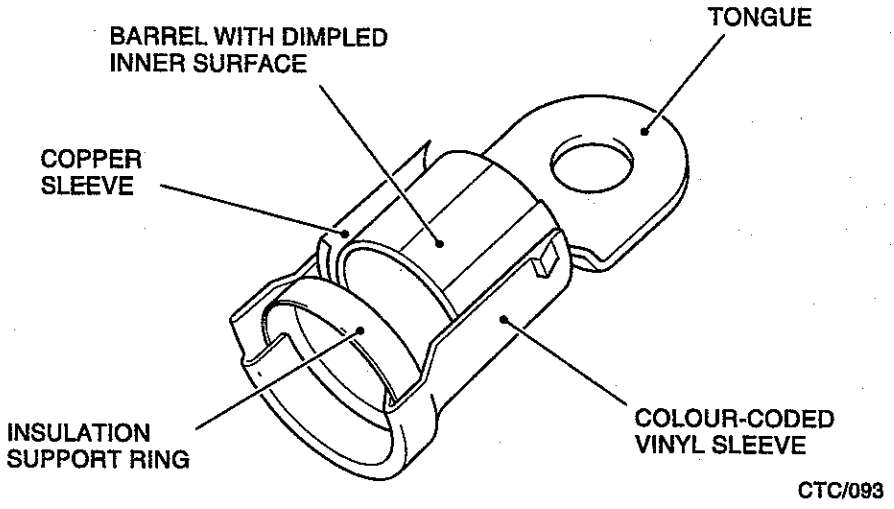

Fig 1 Construction of an AMPLIBOND termination

Size code

3 A cable size code, e.g. 8, is stamped on the underside of the face of the tongue of each termination and on the associated die halves. This code does not relate to the cable conductor size for service applications (see Chapter 1). The pre-insulated sleeve is colour coded according to the cable size code (see Tables 1 to 8). This colour is repeated, in dot form, on both the fixed and moving parts or each die set to aid selection of the correct die.

Die verification

4 During the crimping operation the stripped conductor and the cable insulation are inserted into the barrel and sleeve of the termination. The termination is then crimped to both the conductor and its insulation. A size code (see Tables 1 to 8) is embossed by each half of the die set onto the termination sleeve to provide a means of checking, by the code's presence, that the correct die/termination combination has been used. The embossed numbers and the stamped code number on the underside of the termination must all be the same.

NOTE

Identical numbers do not indicate that the correct cable/termination combination has been employed. This is decided by calculating the cable conductor size, as described in Chapter 1, then selecting the appropriate termination from the tables.

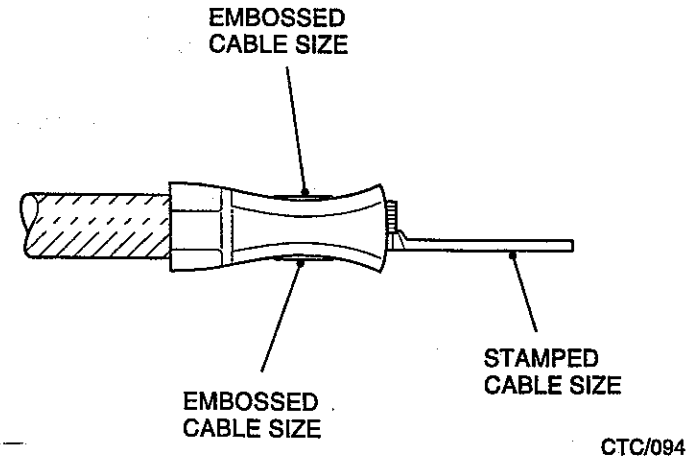

Fig 2 Die/termination check

Insulation support

5 Cable insulation thickness for a given conductor size varies considerably. To ensure that the insulation will not be over or under crimped, the dies are provided with three crimp compression settings.

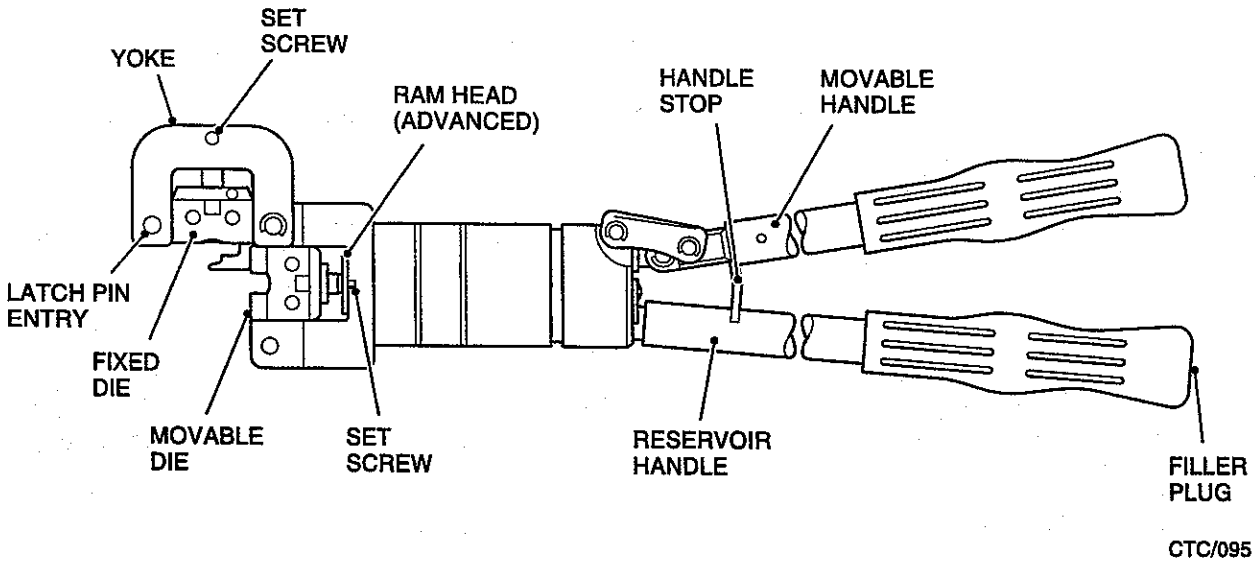

Fig 3 Hydraulic hand-operated crimping tool

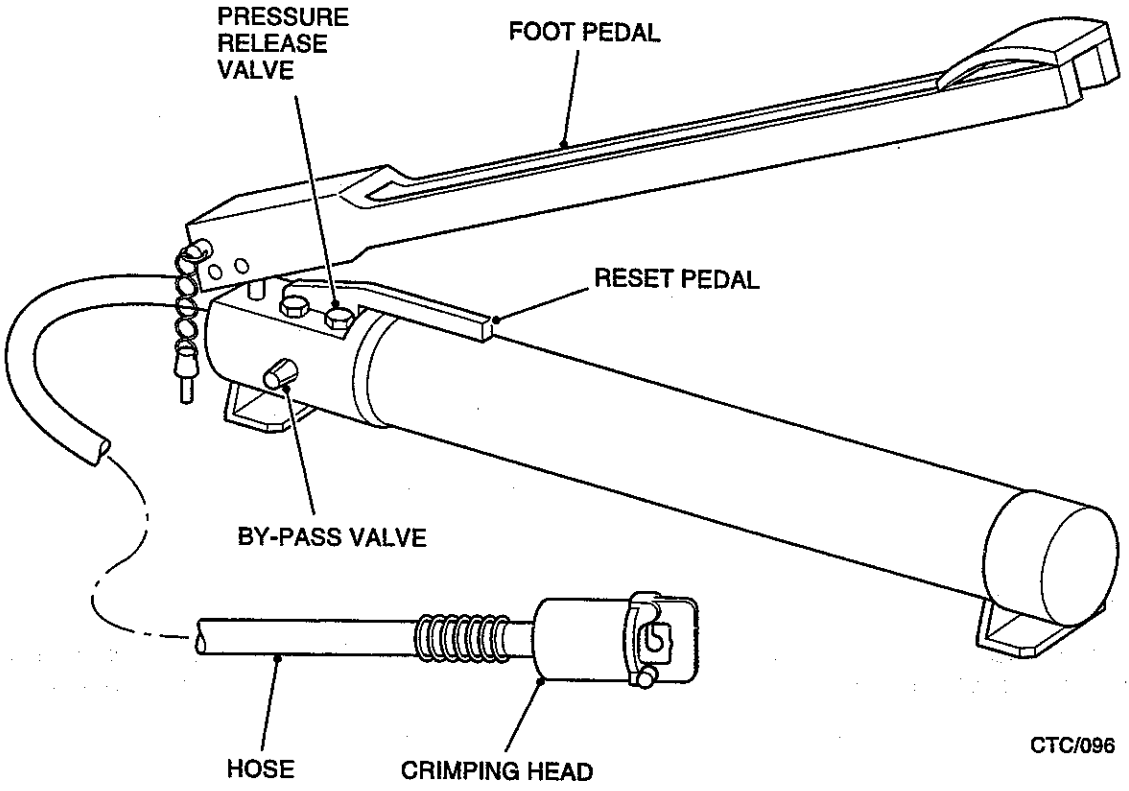

Fig 4 Hydraulic foot-operated crimping tool

TOOLS

Introduction

6 Two types of hydraulic crimping tool, each with its range of dies, may be used for crimping AMPLIBOND ring tongue terminations.

6.1 Hand-operated hydraulic tool (see Fig 3). This tool (Part No. 69061), when fitted with the appropriate dies, is used to crimp terminations to cables in the size code range 8 to 2.

6.2 Foot-operated hydraulic tool (see Fig 4). This tool (Part Nos. Head - 69066, Foot - 781019), when fitted with the appropriate dies, is used to crimp terminations to cables in the size code range 1/0 to 4/0.

7 Tables 1 to 8 list the correct tool and dies for a particular termination.

WARNINGS

(1) POISON. HYDRAULIC FLUID IS POISONOUS, AND WHEN LEAKING UNDER PRESSURE CAN EASILY PENETRATE THE SKIN. DO NOT USE LEAKING TOOLS. DO NOT OPERATE THE FOOT PUMP WITHOUT A CRIMPING HEAD BEING ATTACHED.

(2) CRUSHED FINGERS. KEEP HANDS AND FINGERS CLEAR OF THE DIES WHEN PUMPING A TOOL TO ADVANCE THE RAM.

Inserting the dies (see Figs 3 and 5)

CAUTION

Equipment damage. Before using a tool for crimping, check that the yoke is closed and the latch pin is fully inserted otherwise damage to the dies will occur.

8 Dies are inserted in both tools as follows:

8.1 Remove the latch pin on the tool head and open the yoke.

8.2 Loosen the setscrew in the yoke.

8.3 Before inserting the dies in the head, loosen the socket-head capscrews that hold the insulation crimping section of the dies in place. If the screws are not loosened dies may not fit into the head of the tool because of the close clearance.

8.4 Insert the stationary die (large shank) into the yoke. Tighten the setscrew.

8.5 Pump the tool to advance the ram until the setscrew is visible.

8.6 Loosen the setscrew in the ram and insert the movable die (small shank) into the well of the ram.

8.7 Tighten the setscrew and check that the movable die is properly orientated to mate with the stationary die.

8.8 Retighten the capscrews holding the insulation crimp section of the dies.

8.9 Retract the ram.

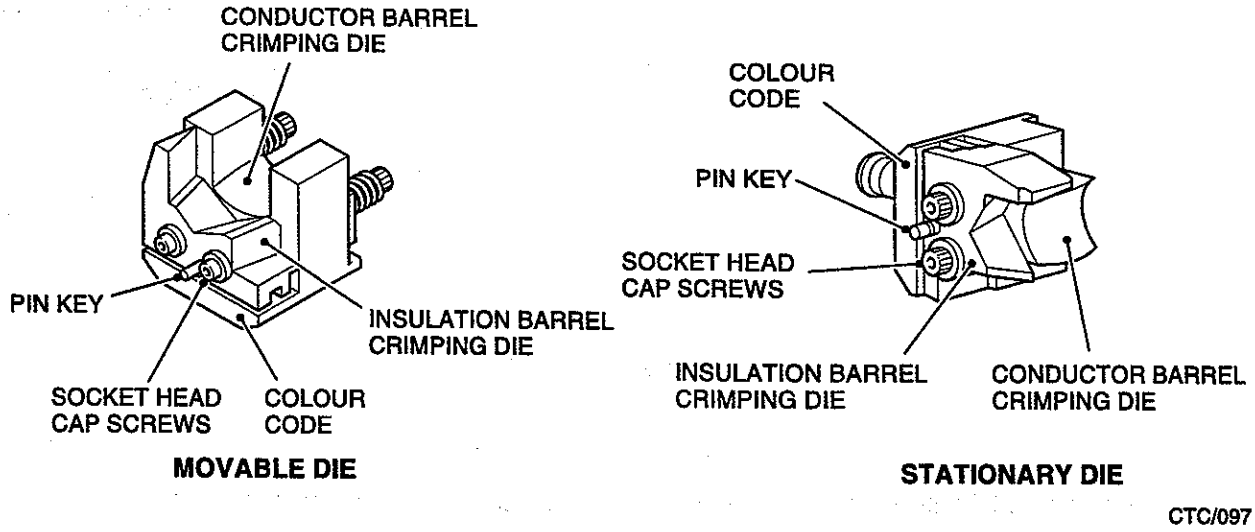

Fig 5 Pin key location

Insulation crimping adjustment

9 Crimp insulation compression is set at the inserted die by adjusting the position of pin keys to one of three positions in both the stationary and movable dies. Generally, each half of the die has one pin key which is secured by two socket-headed capscrews (see Fig 5). The exception is die, Part No. 48753-1 (cable size code 6) which has two pin keys and one capscrew in each die half.

10 The correct position for each pin key must be determined by testing prior to actually crimping the termination to the cable.

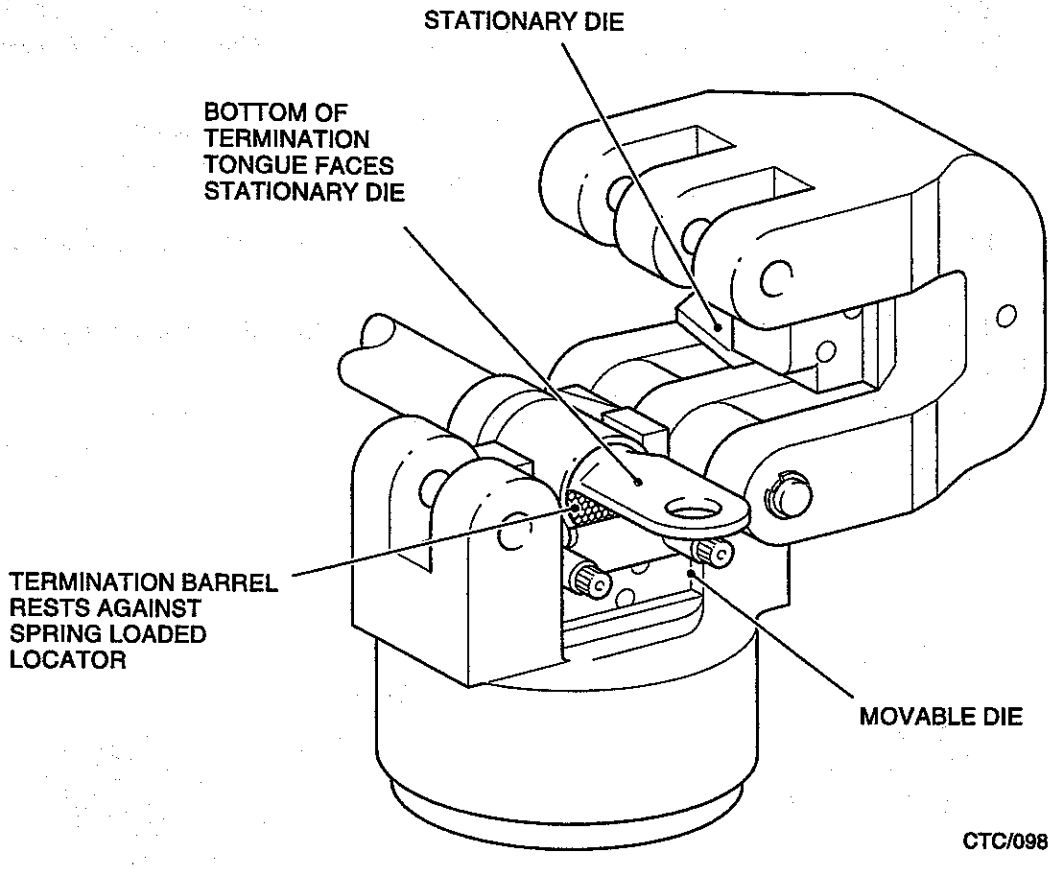

Fig 6 Correct location of termination in crimping tool

11 Set the pin keys to the position of least compression as follows:

11.1 Loosen the socket-headed capscrews and push the pin key all the way in so that the insulation section of the die is in the loose position. Make certain that the pin key in both the stationary and movable dies are placed in the <u>same</u> position.

11.2 Press and hold the insulation section down against the pin key. This will prevent the spring-loaded pin key from popping back.

11.3 Tighten the socket headed capscrews.

NOTE

Be certain that the insulation crimp portion of both the movable and stationary dies are adjusted to the same position.

11.4 Place a termination between the crimping jaws as shown in Fig 6.

11.5 Insert the unstripped cable into the insulation support sleeve of the termination.

11.6 Crimp the termination as described in Para 15.

11.7 Remove the crimped termination from the dies and visually inspect the insulation crimp part of the termination. The insulation crimp should grip the wire insulation.

11.8 If the insulation crimp does not grip the insulation, loosen the socket-headed capscrews and set the pin key to the next position.

11.9 Repeat the test from Para 11.4 using the same termination until the insulation is gripped.

Cable stripping

12 When stripping insulation from a conductor the correct tool and blade must be used, dependent on the type of insulation. Detailed information on cable stripping is given in AP 113D-1700-1. The wire must be stripped to the correct length (as specified in Tables 1 to 8). It is essential that the insulation is removed without damaging the conductor.

TOOL OPERATION

Hand-operated tool (see Fig 3)

13 The movable die is retracted by twisting and holding the reservoir handle counter-clockwise. It is advanced by pumping the movable handle against the reservoir handle. The effort to advance the die increases during crimping until the maximum crimping pressure is reached, as indicated by a sudden decrease in pumping effort.

Foot-operated tool (see Fig 4)

14 The movable die is retracted by pressing the foot pump return pedal and is advanced by pumping the upper foot pedal. When pumping during crimping, a sudden decrease in effort is felt during the early stages. The effort required then increases again until the maximum crimping pressure is reached, as indicated by a snapping sound and a sudden decrease in pumping effort.

CRIMPING

Crimping procedure

15 The following procedure applies to all dies.

15.1 Check that the crimping tool is registered with the PTT NCO.

15.2 Retract the movable die.

15.3 Remove the latch pin and open yoke.

15.4 Place the termination onto the movable die so that the barrel butts against the locator (see Fig 6).

15.5 Close yoke and securely refit the latch pin.

15.6 Carefully advance the movable die until the termination is just held in place by the dies. Do not deform the termination.

15.7 Insert the correctly stripped cable into the termination barrel.

15.8 Hold the cable in position and complete the crimp by advancing the ram until the maximum pressure is reached.

15.9 Remove the latch pin, open the yoke, and remove the termination. Rock the termination if it is stuck in the die.

Inspecting the crimp

16 Inspect the crimp as described below:

16.1 Check that the size code embossed on both sides of the termination barrel by the dies is the same as on the tongue.

16.2 Check that the conductor protrudes approximately 0.8 mm (1/32 in) from the barrel.

USE OF TABLES

17 Tables 1 to 8 contain all the information necessary to identify the correct termination for a particular application together with its reference number. The cable stripping length is shown for each termination and also the correct die and tool.

18 The cable size code is included in the tables for reference only. The actual conductor size, circular mil area (CMA) and cross sectional area (CSA) must be determined either by measurement or by reference to specifications.

19 Before referring to the tables the following information is required. This must be obtained either by measurement or from specifications (check both where confusion may exist).

19.1 Cable conductor CMA or CSA (refer to Chapter 1) and cable insulation overall diameter.

19.2 Termination type, stud size and dimensions.

20 With the information at Para 19, identify the appropriate table. From the illustrations locate the required section of the table. Then by reference to stud size, cable insulation range, etc the termination reference number is obtained. Stripping length and crimping tool details are specified in each table header and apply to all the terminations listed in that table.

TABLE 1 AMPLIBOND TERMINATIONS FOR CABLES: CMA 13,100 TO 20,800, CSA 6.64 TO 10.5 MM², CABLE SIZE CODE 8

Terminal/die colour	: Red	Tool Ref No.	: 1M/5120-00-8534513
Cable size code	: 8	Part No.	: 69061
Strip length - tongue	: 8.5 to 9 mm	Die Ref No.	: 1M/5120-00-7120425
		Part No.	: 48752-1

Ring tongue

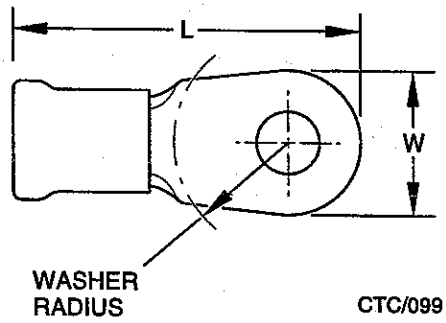

Stud size mm	Stud size BA/in	Max. Insul'n diam. mm	W mm	L mm	Max. washer radius mm	NATO Stock No. or Reference No.	AMP Part No.
4	3	7.6	12.1	40.3	11.1	5X/ 5940-99-5814328	322047
4	3	7.6	9.5	40.3	11.1	5X/ 14739	330600
4.5	2	7.6	10.3	33.7	5.5	5X/ 5940-99-1178873	323197
4.5	2	7.6	10.9	39.7	11.1	5X/ 5940-99-9530251	322128
4.5	2	7.6	14.9	43.2	12.7	5X/ 5940-99-7180472	322002
4.5	2	9.6	10.9	39.7	11.1	5940-00-1435284	322154
5	-	7.8	14.9	43.6	11.7	5940-99-2507249	160152
5	-	7.8	10.9	40.1	13.8	5940-14-2185951	160058
6	0	7.6	12.1	40.3	11.1	5X/ 5940-99-9456565	322049
6	0	7.6	14.9	43.2	12.7	5940-99-9455620	321669
8	5/16	7.6	14.9	43.2	12.7	5X/ 5940-9448024	322003
9.5	3/8	7.6	14.9	43.2	12.7	5X/ 5940-9530166	322004
12	1/2	7.6	22.2	46.9	12.7	5940-99-2556646	328463

TABLE 2 AMPLIBOND TERMINATIONS FOR CABLES: CMA 20,800 TO 33,100, CSA 10.6 TO 16.8 MM², CABLE SIZE CODE 6

Terminal/die colour	: Blue	Tool Ref No.	: 1M/5120-00-8534513
Cable size code	: 6	Part No.	: 69061
Strip length - tongue	: 10.5 to 11 mm	Die Ref No.	: 1M/5120-00-7317301
		Part No.	: 48753-1

Ring tongue

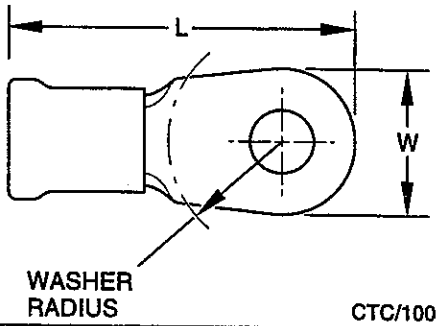

CTC/100

Stud size mm	Stud size BA/in	Max. Insul'n diam. mm	W mm	L mm	Max. washer radius mm	NATO Stock No. or Reference No.	AMP Part No.
4.5	2	9.6	12.7	47.0	13.1	5940-14-2311820	322050
4.5	2	9.6	12.7	47.6	14.2	5940-12-1807145	160057
4.5	2	9.6	15.9	48.6	13.1	5940-00-6176663	322005
4.5	2	9.6	15.9	49.2	14.2	5940-14-2286210	160153
4.5	2	9.6	11.9	43.9	10.7	5X/ 5940-99-6426681	322153
6	0	9.6	12.7	47.0	13.1	5X/ 5940-99-1987413	322051
6	0	9.6	15.9	48.6	13.1	5940-00-6819810	321670
6	0	11.1	12.7	47.0	13.1	5X/ 5940-99-5215693	322155
8	5/16	9.6	15.9	48.6	13.1	5940-99-1989524	322006
9.5	3/8	9.6	15.9	48.6	13.1	5X/ 5940-99-1987388	322007
10	-	9.6	15.9	49.2	14.2	5940-14-2286212	60043
11	7/16	9.6	15.9	48.6	13.1	5940-00-2260490	322008

Bent ring tongue

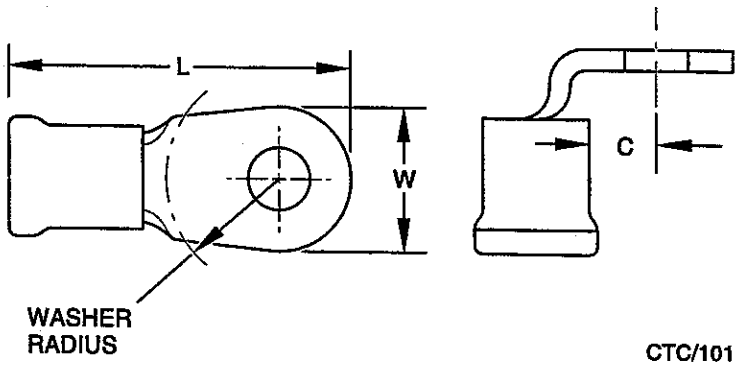

CTC/101

Stud size mm	Stud size BA/in	Max. Insul'n diam. mm	W mm	L mm	Max. washer radius mm	NATO Stock No. or Reference No.	AMP Part No.
4.5	2	9.6	12.7	-	8.1	110H/ 5940-00-1970156	322887
6	0	9.6	12.7	-	9.6	5940-99-5584917	322888

TABLE 3 AMPLIBOND TERMINATIONS FOR CABLES: CMA 33,100 TO 52,600, CSA 16.9 TO 26.6 MM², CABLE SIZE CODE 4

Terminal/die colour	: Yellow	Tool Ref No.	: 1M/5120-00-8534513
Cable size code	: 4	Part No.	: 69061
Strip length - tongue	: 12 to 12.5 mm	Die Ref No.	: 1M/5120-00-7120493
		Part No.	: 48754-1

Ring tongue

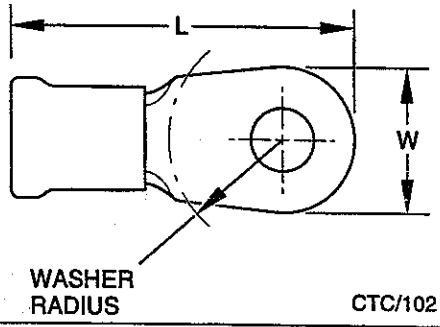

Stud size mm	Stud size BA/in	Max. Insul'n diam. mm	W mm	L mm	Max. washer radius mm	NATO Stock No. or Reference No.	AMP Part No.
4.5	2	11.1	13.9	48.5	13.5	5X/ 5940-99-6219980	322052
4.5	2	11.1	17.2	50.1	13.5	5940-99-7214771	322009
5	-	11.1	13.9	49.0	14.7	5940-99-0280000	160154
6	0	11.1	13.9	48.5	13.5	5X/ 5940-99-9456257	322053
6	0	11.1	17.2	50.1	13.5	5X/ 5940-99-6595973	321671
8	5/16	11.1	17.2	50.1	13.5	505K/ 5940-14-2286214	322010
9.5	3/8	11.1	17.2	50.1	13.5	5X/ 5940-99-2463368	322011
10	-	11.1	16.7	33.3	13.1	5940-99-8393886	160075
12	1/2	11.1	17.2	50.1	13.5	110H/ 5940-01-0559207	328221

Bent ring tongue

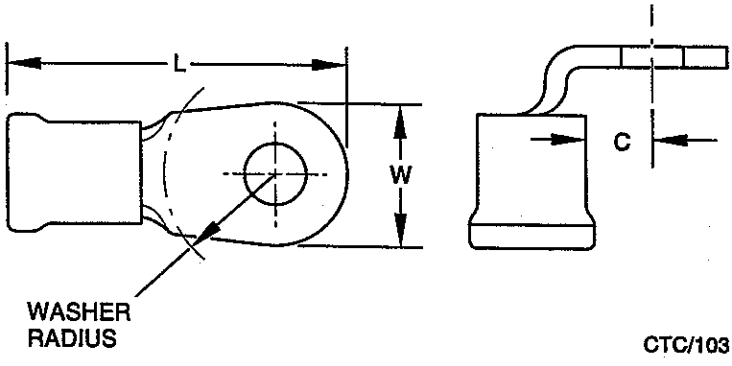

Stud size mm	Stud size BA/in	Max. Insul'n diam. mm	W mm	L mm	Max. washer radius mm	NATO Stock No. or Reference No.	AMP Part No.
6	0	11.1	13.9	-	9.6	5940-14-3016194	322894
8	5/16	11.1	17.2	-	11.9	5940-99-1064492	322897
9.5	3/8	11.1	17.2	-	11.9	5940-00-0678409	322898

TABLE 4 AMPLIBOND TERMINATIONS FOR CABLES: CMA 52,600 TO 83,700, CSA 26.7 TO 42.3 MM², CABLE SIZE CODE 2

Terminal/die colour	: Red	Tool Ref No.	: 1M/5120-00-8534513
Cable size code	: 2	Part No.	: 69061
Strip length - tongue	: 12 to 12.5 mm	Die Ref No.	: 1M/5120-99-1382565
		Part No.	: 48755-1

Ring tongue

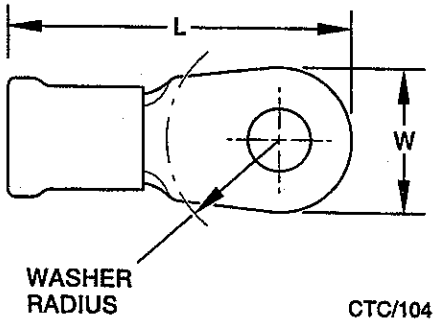

CTC/104

Stud size mm	Stud size BA/in	Max. Insul'n diam. mm	W mm	L mm	Max. washer radius mm	NATO Stock No. or Reference No.	AMP Part No.
4.5	2	12.8	18.1	52.5	14.7	5940-00-8053337	322122
5	-	12.8	18.1	52.5	12.8	5X/ 5940-99-1179303	160156
6	0	12.8	17.1	52.1	14.7	5940-99-6383013	322125
6	0	12.8	18.1	52.6	14.7	5X/ 5940-99-4504003	322054
8	5/16	12.8	18.1	52.6	14.7	5X/ 5940-99-1987414	322074
8	5/16	12.8	21.7	54.4	14.7	5X/ 5940-99-6476938	322013
9.5	3/8	12.8	21.7	54.4	14.7	5940-99-6228957	322014
9.5	3/8	12.8	18.1	52.5	14.7	5X/ 5940-99-1989471	322055
11	7/16	12.8	21.7	54.4	14.7	5940-00-8930696	322015
12	1/2	12.8	21.7	54.4	14.7	5940-99-6226837	322016

Bent ring tongue

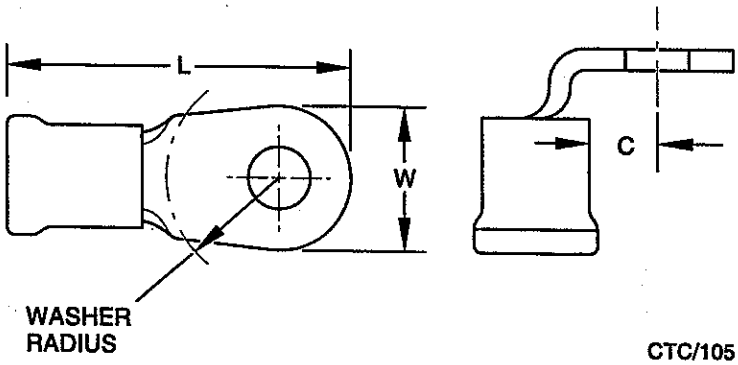

CTC/105

Stud size mm	Stud size BA/in	Max. Insul'n diam. mm	W mm	L mm	Max. washer radius mm	NATO Stock No. or Reference No.	AMP Part No.
6	0	12.8	17.2	-	9.4	5940-99-6627657	322900
8	5/16	12.8	18.1	-	11.8	-	322134
9.5	3/8	12.8	18.1	-	4.8	5X/ 5940-99-6480547	322902

TABLE 5 AMPLIBOND TERMINATIONS FOR CABLES: CMA 83,700 TO 119,500, CSA 42.4 TO 60.5 MM², CABLE SIZE CODE 1/0

Terminal/die colour	: Blue	Tool Ref No.	: Head 1M/5110-00-1240201
Cable size code	: 1/0		: Pump 1M/4320-99-9775754
Strip length - tongue	: 19 to 20 mm	Part No.	: Head, 69066. Pump, 781019
		Die Ref No.	: 1M/5120-00-1240191
		Part No.	: 48756-1

Ring tongue

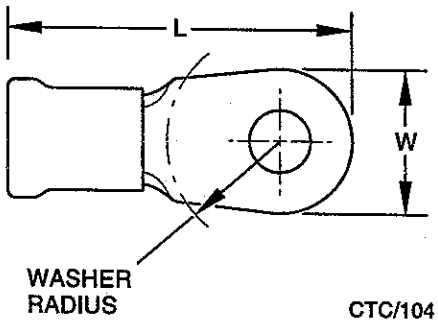

CTC/104

Stud size mm	Stud size BA/in	Max. Insul'n diam. mm	W mm	L mm	Max. washer radius mm	NATO Stock No. or Reference No.	AMP Part No.
6	0	16.1	20.5	62.7	15.9	5X/ 5940-99-6595971	322085
8	5/16	16.1	20.5	62.7	15.9	5X/ 5940-99-6255613	322086
9.5	3/8	16.1	20.5	62.7	15.9	5X/ 5940-99-6255614	322087
9.5	3/8	16.1	22.2	63.5	15.9	5940-00-8397777	321675
10	-	16.3	20.5	63.6	13.6	5940-14-2691326	160158
12	1/2	16.1	22.2	63.5	15.9	5940-99-7260990	321677

Bent ring tongue

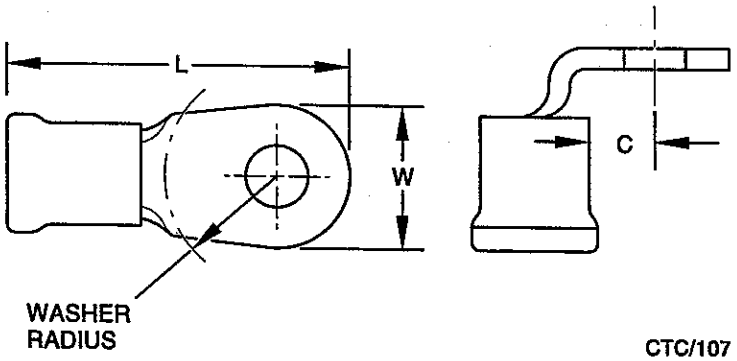

CTC/107

Stud size mm	Stud size BA/in	Max. Insul'n diam. mm	W mm	L mm	Max. washer radius mm	NATO Stock No. or Reference No.	AMP Part No.
6	0	16.1	20.5	-	9.7	5940-00-7254990	322907
9.5	3/8	16.1	20.5	-	12.1	5940-99-7413327	322908
12	1/2	16.1	22.2	-	12.1	5940-00-9532122	322910

TABLE 6 AMPLIBOND TERMINATIONS FOR CABLES: CMA 119,500 TO 150,500, CSA 60.6 TO 76.2 MM², CABLE SIZE CODE 2/0

Terminal/die colour	: Yellow	Tool Ref No.	: Head 1M/5110-00-1240201
Cable size code	: 2/0		: Pump 1M/4320-99-9775754
Strip length - tongue	: 19 to 20 mm	Part No.	: Head, 69066. Pump, 781019
		Die Ref No.	: 1M/5110-00-1240193
		Part No.	: 48757-1

Ring tongue

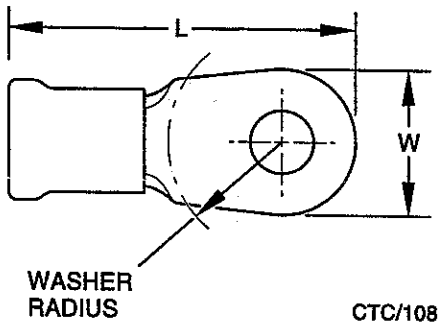

Stud size mm	Stud size BA/in	Max. Insul'n diam. mm	W mm	L mm	Max. washer radius mm	NATO Stock No. or Reference No.	AMP Part No.
6	0	17.4	23.5	64.5	15.9	5940-00-8188123	322088
8	5/16	17.4	23.5	64.5	15.9	5940-14-2317510	322089
8	5/16	17.4	23.5	64.8	15.9	5940-00-1257617	322056
9.5	3/8	17.4	23.5	64.5	15.9	5940-14-2317509	322090
9.5	3/8	17.4	23.6	64.8	15.9	5940-99-8401172	322057
11	7/16	17.4	23.5	64.5	15.9	-	322091
12	1/2	17.4	23.6	64.8	15.9	5940-00-8307840	322058
12	1/2	17.4	23.5	64.5	15.9	5940-00-8040597	322092
16	5/8	17.4	24.0	67.0	15.9	5940-14-2691331	160230

TABLE 7 AMPLIBOND TERMINATIONS FOR CABLES: CMA 150,500 TO 190,000, CSA 76.3 TO 96.2 MM², CABLE SIZE CODE 3/0

Terminal/die colour	: Red	Tool Ref No.	: Head 1M/5110-00-1240201
Cable size code	: 3/0		: Pump 1M/4320-99-9775754
Strip length - tongue	: 19.1 to 20.6 mm	Part No.	: Head, 69066. Pump, 781019
		Die Ref No.	: 5110-01-0762149
		Part No.	: 48758-1

Ring tongue

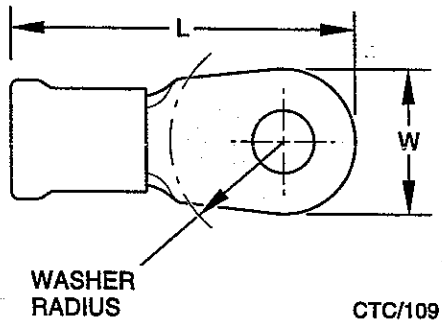

Stud size mm	Stud size BA/in	Max. Insul'n diam. mm	W mm	L mm	Max. washer radius mm	NATO Stock No. or Reference No.	AMP Part No.
8	5/16	18.7	25.4	67.8	15.9	5940-00-8795383	322093
9.5	3/8	18.7	27.0	68.5	15.9	5940-00-9380970	322059
9.5	3/8	18.7	25.9	67.8	15.9	110H/ 5940-00-8040598	322094
10	-	18.7	27.0	69.0	15.9	5940-14-2691332	160106
12	1/2	18.7	27.0	68.5	15.9	5940-14-2691333	322060
12	1/2	18.7	25.9	67.8	15.9	-	322096
16	5/8	18.7	27.0	69.0	15.9	5940-14-2691334	160231

TABLE 8 AMPLIBOND TERMINATIONS FOR CABLES: CMA 190,000 TO 231,100, CSA 96.3 TO 117 MM², CABLE SIZE CODE 4/0

Terminal/die colour	: Blue	Tool Ref No.	: Head 1M/5110-00-1240201
Cable size code	: 4/0		: Pump 1M/4320-99-9775754
Strip length - tongue	: 19.5 to 21 mm	Part No.	: Head, 69066. Pump, 781019
		Die Ref No.	: 5110-00-1240196
		Part No.	: 48759-1

Ring tongue

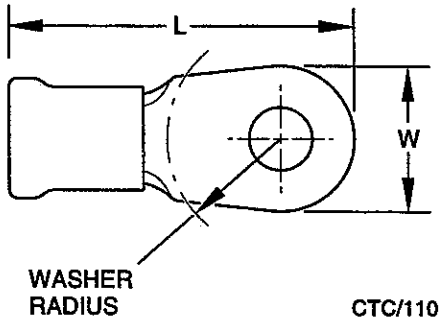

Stud size mm	Stud size BA/in	Max. Insul'n diam. mm	W mm	L mm	Max. washer radius mm	NATO Stock No. or Reference No.	AMP Part No.
9.5	3/8	20.3	29.0	70.3	15.9	110H/ 5940-00-1141320	322061
12	1/2	20.3	29.0	70.3	15.9	110H/ 5940-00-1141321	322062
18	3/4	20.3	28.6	70.6	15.9	5940-14-2691337	160234
22	7/8	20.3	31.7	83.5	27.5	5940-00-1141322	322063

CHAPTER 2-4

AMP SOLISTRAND UNINSULATED TERMINATIONS

CONTENTS

TERMINATIONS

Description (see Fig 1)

1 SOLISTRAND uninsulated terminations are manufactured by AMP of GB Limited. A termination consists of a one-piece, tin plated annealed copper tongue and barrel which is crimped to a cable conductor. The temperature rating is 105°C.

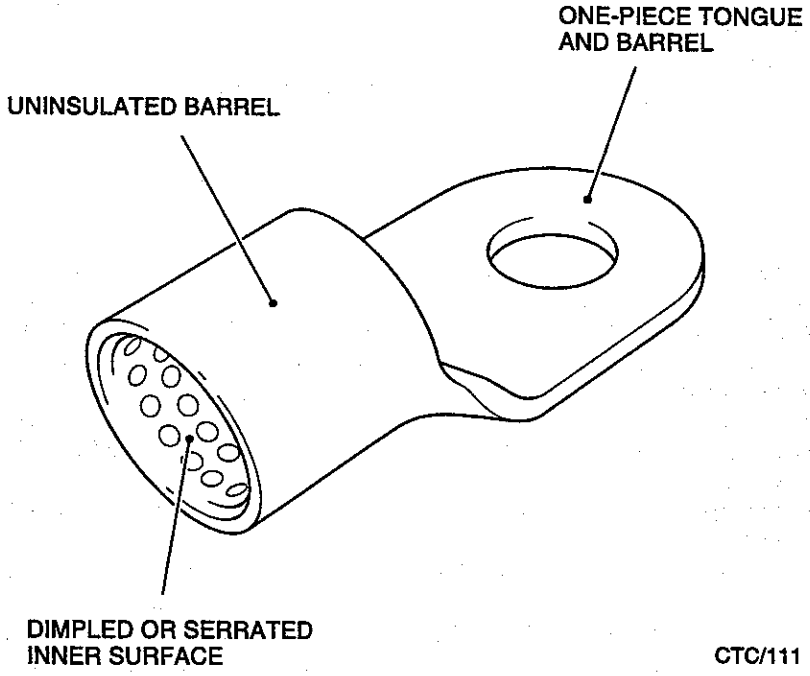

Fig 1 Construction of a SOLISTRAND termination

Size code

2 A cable size code, e.g. 22 - 18, is stamped on the underside of the termination tongue. Each tool is marked with the range of size codes covered by the tool. The code does not relate to the cable conductor size for service applications (see Chapter 1).

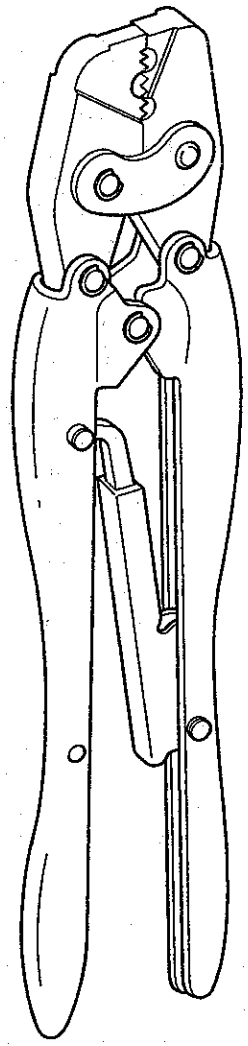

Fig 2 Plier action crimping tool

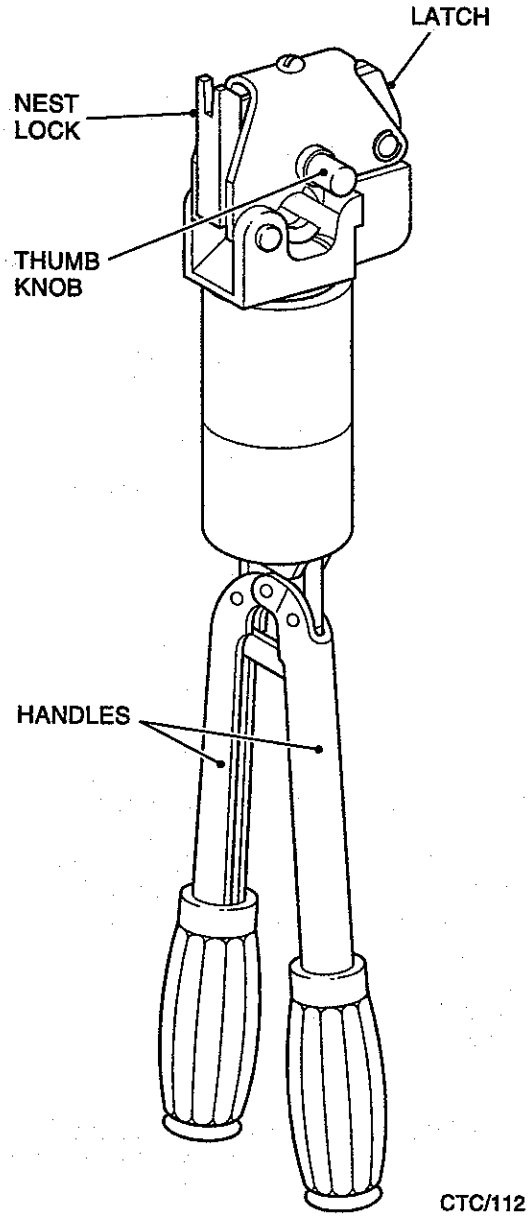

Fig 3 Hydraulic hand-operated crimping tool

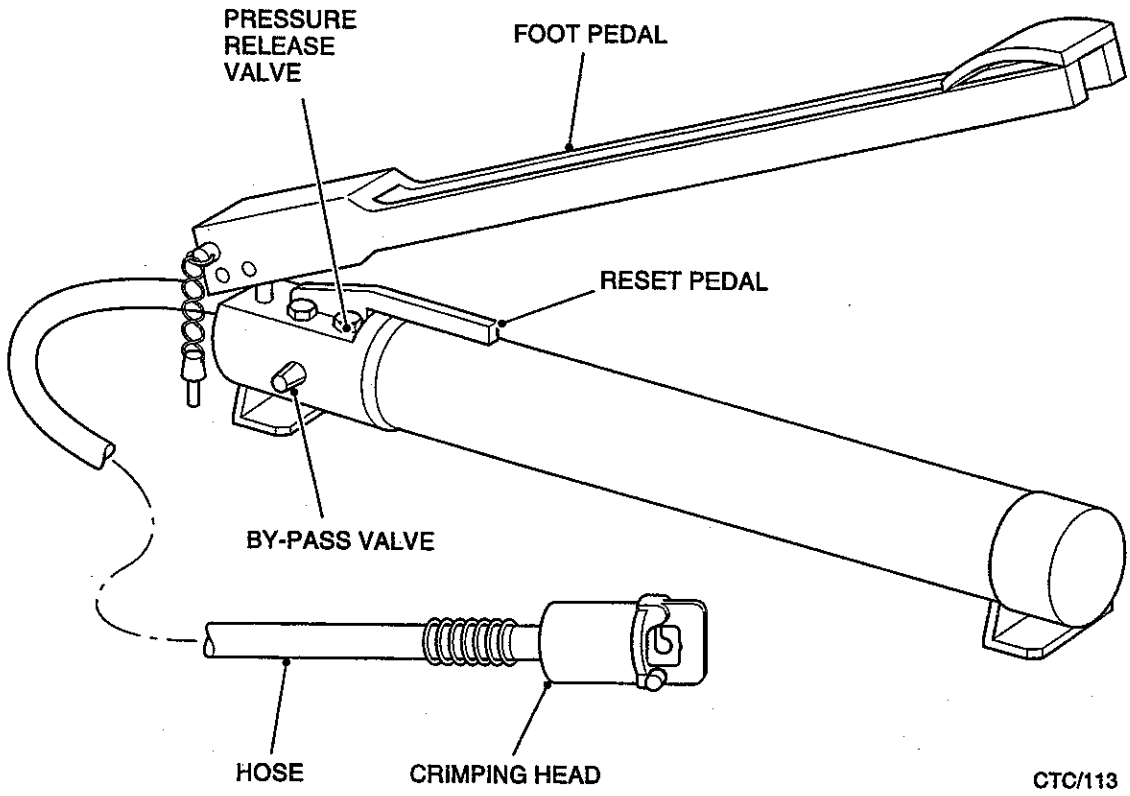

Fig 4 Hydraulic foot-operated crimping tool

TOOLS

Introduction

3 Three types of crimping tool may be used for crimping SOLISTRAND terminations.

3.1 Plier-action tool (see Fig 2). This tool (Part No. 525693) is provided with three crimping die areas in the head to cover cable size code ranges 22 - 18, 16 - 14 and 12 - 10. The handles incorporate a ratchet system which ensures that the tool can be opened only at the end of the crimping cycle.

3.2 Hand-operated hydraulic tool (see Fig 3). This tool (Part No. 69062) is fitted with four nests to cover cable size codes 8, 6, 4 and 2. The appropriate nest is rotated into position opposite the indenter.

3.3 Foot-operated hydraulic tool (see Fig 4). This tool (Part No. 781019) is fitted with a crimping head (Part No. 781017). With the appropriate dies inserted, the tool is used to crimp terminations to cables in the size code range 1/0 to 4/0.

4 Care must be taken to ensure that the correct area or nest of a crimping tool or dies are chosen for the size of termination to be crimped. Tables 3 to 13 list the tool and dies required for each type of termination.

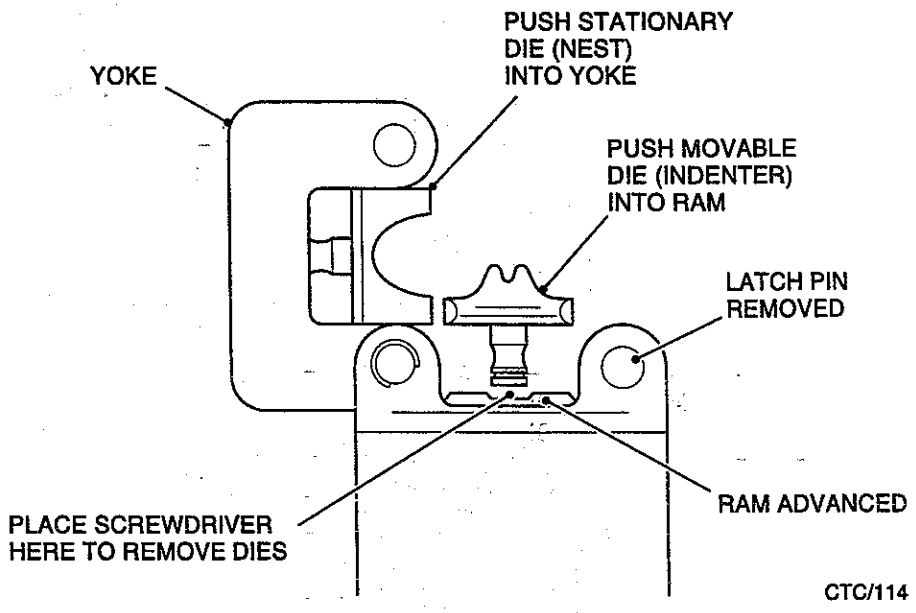

Fig 5 Inserting dies in the head of the hydraulic foot-operated tool

WARNINGS

(1) POISON. HYDRAULIC FLUID IS POISONOUS, AND WHEN LEAKING UNDER PRESSURE CAN EASILY PENETRATE THE SKIN. DO NOT USE LEAKING TOOLS. DO NOT OPERATE THE FOOT PUMP WITHOUT A CRIMPING HEAD BEING ATTACHED.

(2) CRUSHED FINGERS. KEEP HANDS AND FINGERS CLEAR OF THE DIES WHEN PUMPING A TOOL TO ADVANCE THE RAM.

Inserting the dies in the hydraulic foot operated tool (see Fig 5)

CAUTION

Equipment damage. Before using a tool for crimping, check that the yoke is closed and the latch pin is fully inserted otherwise damage to the dies will occur.

5 Dies are inserted in the hydraulic foot-operated tool as follows:

5.1 Remove the latch pin on the tool head and open the yoke.

5.2 Insert the stationary die (nest) into the yoke by pressing it until it snaps into position.

5.3 Pump the tool to advance the ram to the approximate position shown in Fig 5.

5.4 Inset the movable die (indenter) into the ram by pressing it until it snaps into position.

5.5 Retract the ram.

5.6 Close the yoke and insert the latch pin.

Using the hydraulic foot-operated tool (see Fig 4)

6 The movable die is retracted by pressing the foot pump return pedal and is advanced by pumping the upper foot pedal. When pumping during crimping, a sudden decrease in effort is felt during the early stages. The effort required then increases again until the maximum crimping pressure is reached, as indicated by a snapping sound and a sudden decrease in pumping effort.

Cable stripping

7 When stripping insulation from a conductor the correct tool and blade must be used, dependent on the type of insulation. Detailed information on cable stripping is given in AP 113D-1700-1. The wire must be stripped to the correct length (as specified in Table 2). It is essential that the insulation is removed without damaging the conductor.

CRIMPING

Plier action tool (see Fig 6)

8 Make the crimp as described below:

8.1 Open the crimping jaws by squeezing the handles until the ratchet releases. The jaws open automatically.

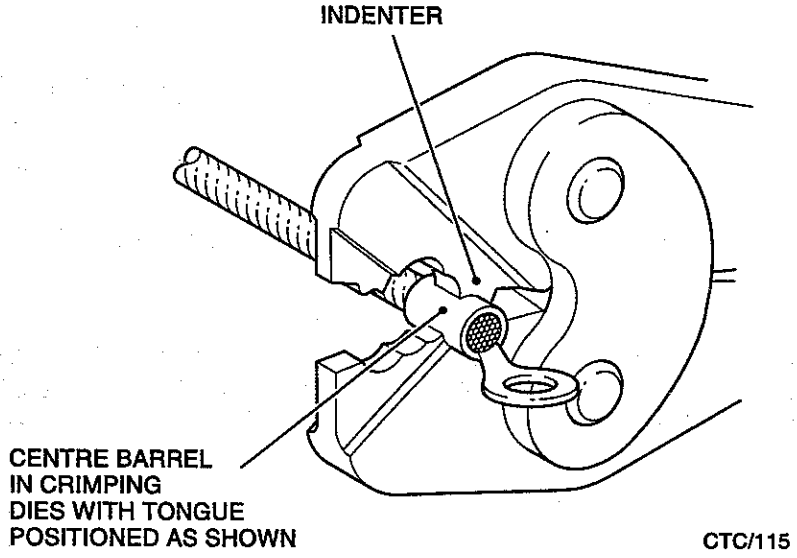

Fig 6 Correct location of termination in plier action tool

8.2 Centre the termination barrel in the appropriate crimping die area. Note that there is no locator so the position must be judged visually.

8.3 Squeeze the handles until the termination is just held by the jaws. Do not deform the termination.

8.4 Insert the correctly stripped cable fully into the termination barrel.

8.5 Hold the cable in position and complete the crimp by squeezing the handles until the ratchet releases.

Hydraulic hand-operated tool (see Fig 7)

Selecting the nest

9 Press in the angled face of the latch and swing back the crimping head. With the head open, pull back the protruding end of the nest lock and turn the thumb knob until the required nest appears.

10 If the nest is correctly aligned, the nest lock springs back into place when released. If the lock does not spring back then align the nest by slightly turning the thumb knob to left and right until the lock springs into place. Check that the chosen nest is still selected.

Crimping action

11 In case the handles have been pumped, open the relief valve for several seconds to allow the indenter to retract.

11.1 Carefully centre the termination between the indenter and the nest (see Fig 7). Note that there is no locator so the position must be judged visually.

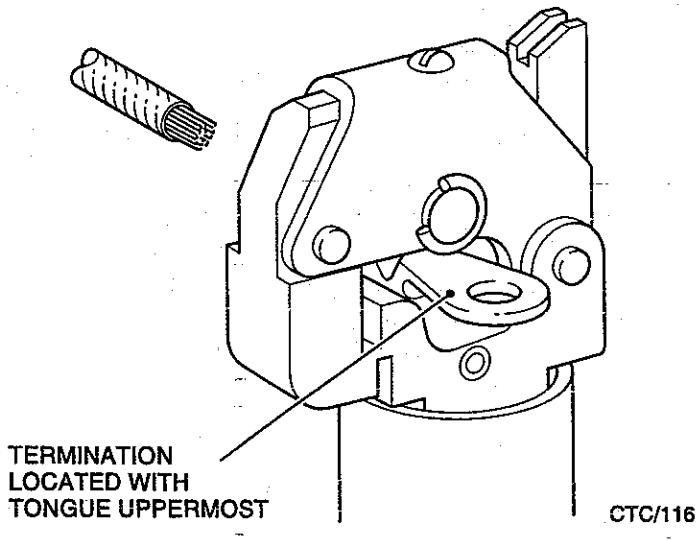

Fig 7 Correct location of termination in hydraulic hand-operated tool

11.2 Using short, easy strokes, gently pump the handles only until the indenter moves up to just hold the termination in place. Do not deform the termination.

11.3 Check that the termination is correctly located and insert the correctly stripped cable fully into the barrel.

11.4 Pump the handles until a sudden decrease in pressure is noticed. This indicates that the crimp is completed and oil is being bypassed internally.

11.5 Press the pressure relief valve until the indenter fully retracts.

Hydraulic foot-operated tool (see Fig 8)

12 The following procedure applies to all dies.

12.1 Check that the crimping tool is registered with the PTT NCO.

12.2 Retract the movable die.

12.3 Remove the latch pin and open the yoke.

12.4 Place the termination centrally onto the movable die. For best results, when the brazed seam of the termination is visible, position the seam towards the movable die, i.e. the indenter.

12.5 Close the yoke and securely refit the latch pin.

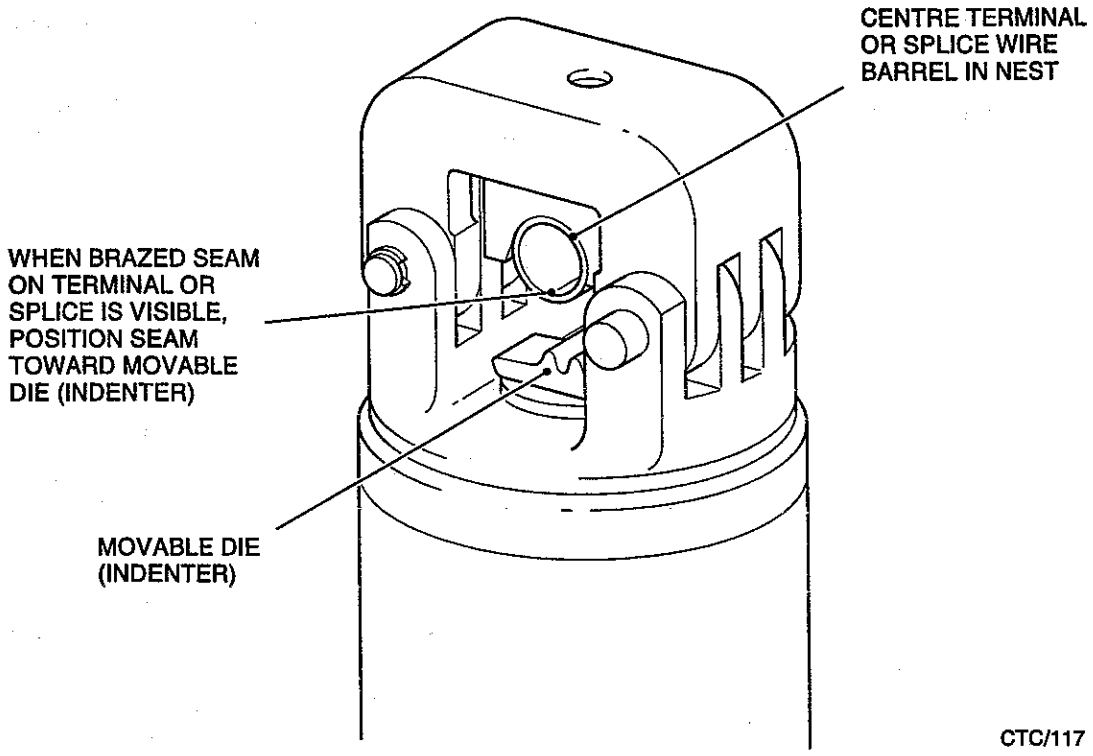

Fig 8 Correct location of termination in hydraulic foot-operated tool

12.6 Carefully advance the movable die until the termination is just held in place by the dies. Do not deform the termination.

12.7 Insert the correctly stripped cable into the termination barrel until the end of the conductor is either flush with, or extends slightly beyond, the end of the wire barrel.

12.8 Hold the cable in position and complete the crimp by advancing the ram until the maximum pressure is reached.

12.9 Remove the latch pin, open the yoke, and remove the termination. Rock the termination if it is stuck in the die.

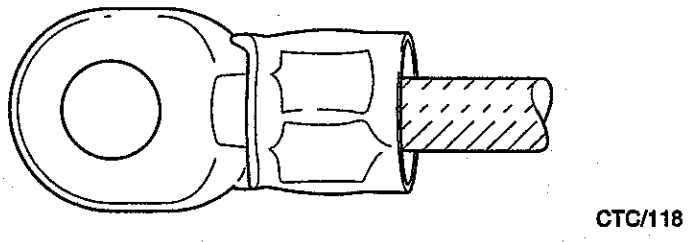

Fig 9 Correct crimp

Inspecting the crimp

13 Inspect the crimp as described below:

13.1 Check that the 'W' indents do not overlap either end of the barrel and that there is no flashing in the indenter area. The presence of flashing indicates an incorrect combination of cable, tool and termination.

13.2 Check that the insulation butts against the barrel and that the cable end is either flush with or just protrudes through the end of the barrel, or is visible through the inspection window.

USE OF TABLES

14 The following tables contain all the information necessary to identify the correct termination for a particular application together with its reference number. Table 1 details the correct tool or crimping head and associated dies, where applicable, for use with each termination. Table 2 details the cable stripping length for each termination.

15 The cable size code is included in the tables for reference only. The actual conductor size, circular mil area (CMA) and cross sectional area (CSA) must be determined either by measurement or by reference to specifications.

16 Before referring to the tables the following information is required. This must be obtained either by measurement or from specifications (check both where confusion may exist).

16.1 Cable conductor CMA or CSA (refer to Chapter 1) and cable insulation overall diameter.

16.2 Termination type, stud size and dimensions.

17 With the information at Para 15, identify the appropriate table. From the illustrations locate the required section of the table. Then by reference to stud size, wire, etc the termination reference number is obtained.

TABLE 1 CRIMPING TOOLS AND DIES

Cable size code	Tool/Head		Dies			
			Fixed die (Nest)		Movable die (Indenter)	
	Ref No.	AMP Part No.	Ref No.	AMP Part No.	Ref No.	AMP Part No.
22 - 18 to 12 - 10	1M/5120-99-1047969	525693	-	-	-	-
8 to 2	1M/5120-99-4687647	69062	-	-	-	-
1/0	1M/5130-99-7306889	781017 or 69065	1M/5120-00-8733732	48132	1M/5120-00-8795483	48131
2/0	1M/5130-99-7306889	781017 or 69065	1M/5120-00-8733731	48133	1M/5120-00-8795483	48131
3/0	1M/5130-99-7306889	781017 or 69065	5120-00-8733729	48134	1M/5120-00-8795483	48131
4/0	1M/5130-99-7306889	781017 or 69065	-	300430	1M/5120-00-8795483	48131

TABLE 2 CABLE STRIPPING LENGTHS

Cable size Code	Cable strip length (mm)			
	Tongue barrel type		Splice type	
	Standard	Long	Butt	Parallel
22 to 18	4.5 to 5.0	6.5 to 7.0	6.5 to 7.0	8.0 to 8.5
16 to 14	4.5 to 5.0	6.5 to 7.0	6.5 to 7.0	8.0 to 8.5
12 to 10	6.5 to 7.0	-	6.5 to 7.0	8.0 to 8.5
8	8.3 to 9.1	-	10.3 to 11.1	10.3 to 11.1
6	9.9 to 10.7	-	11.9 to 12.7	11.9 to 12.7
4	11.5 to 12.3	-	13.5 to 14.3	13.5 to 14.3
2	13.1 to 13.9	-	15.1 to 15.9	15.1 to 15.9
1/0	18.6 to 20.2	-	15.8 to 17.4	17.4 to 19.0
2/0	18.6 to 20.2	-	15.8 to 17.4	17.4 to 19.0
3/0	19.0 to 20.6	-	17.4 to 19.0	17.4 to 19.0
4/0	19.4 to 20.6	-	17.4 to 19.0	19.0 to 20.6

TABLE 3 SOLISTRAND TERMINATIONS FOR CABLES: CMA 509 TO 3,260, CSA 0.26 TO 1.65 MM², CABLE SIZE CODE 22 TO 18

Ring tongue

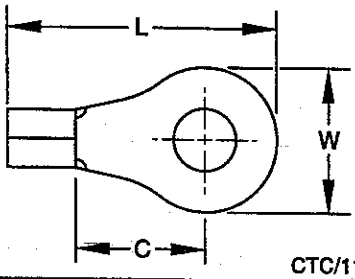

CTC/119

Stud size mm	Stud size BA/in	W mm	L mm	C mm	NATO Stock No. or Reference No.	AMP Part No.
2	8	5.5	11.4	4.0	5940-99-4408910	34103
2	8	4.6	11.3	4.4	5940-00-5028892	322927
2.5	6	5.5	11.4	4.0	5940-99-6562331	34104
2.5	6	4.6	11.3	4.4	5940-99-1054376	36467
2.5	6	6.4	15.8	7.9	5940-99-7629388	323096
2.5	6	7.1	14.6	6.4	10H/ 5940-99-9453836	34106
3/3.5	4	5.5	11.4	4.0	5X/ 5940-99-1179304	34105
3/3.5	4	7.1	14.6	6.4	10H/ 5940-99-9508303	34107
3/3.5	4	7.9	15.8	7.1	5940-99-9462533	34110
4	3	7.9	15.9	7.1	5940-99-7231956	34111
4	3	7.1	14.6	6.4	10H/ 5940-99-9012951	34108
4	3	8.7	16.6	7.5	5940-01-1712943	323086
4.5	2	7.9	15.9	7.1	5940-99-7140996	34112
4.5	2	7.1	14.6	6.4	5X/ 5940-99-9453837	34109
5	-	7.9	15.8	7.1	5940-99-7214837	130017
6	0	11.9	21.7	11.1	10H/ 5940-99-9997726	34113
8	5/16	11.9	21.7	11.1	10H/ 5940-99-9012954	34114
9.5	3/8	13.5	25.3	13.9	5940-99-5237008	34115
12	1/2	18.1	27.2	13.5	5X/ 5940-99-5252064	329966

Spade tongue

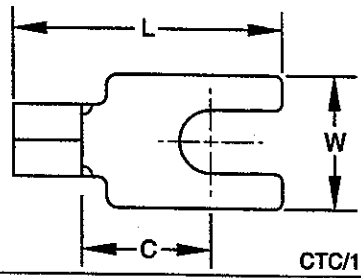

CTC/120

Stud size mm	Stud size BA/in	W mm	L mm	C mm	NATO Stock No. or Reference No.	AMP Part No.
2.5	6	5.5	11.5	4.0	5940-00-8515941	321463
3/3.5	4	7.5	13.5	5.2	110H/ 5940-00-8899329	36195
3/3.5	4	6.4	15.8	7.9	10H/ 5940-99-7730631	323127
4	3	9.5	17.4	7.9	5940-00-6810159	34117
4.5	2	9.5	17.4	7.9	5940-00-8898102	34118

TABLE 3 SOLISTRAND TERMINATIONS FOR CABLES: CMA 509 TO 3,260, CSA 0.26 TO 1.65 MM², CABLE SIZE CODE 22 TO 18 (Continued)

Flange spade tongue

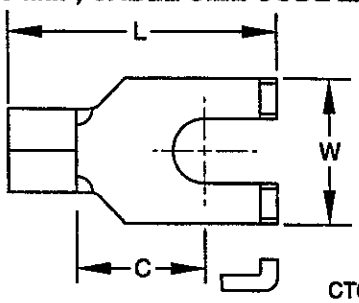

CTC/121

Stud size mm	Stud size BA/in	W mm	L mm	C mm	NATO Stock No. or Reference No.	AMP Part No.
2	8	4.6	12.8	5.2	5940-01-0451242	324605
3/3.5	4	7.5	13.1	5.2	5940-00-5814716	320749

Wire pin

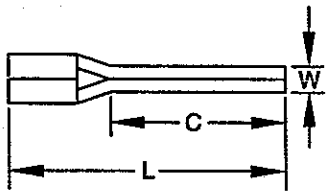

CTC/122

Stud size mm	Stud size BA/in	W mm	L mm	C mm	NATO Stock No. or Reference No.	AMP Part No.
-	-	1.8	14.2	6.8	10H/ 5940-99-1412005	165140

Parallel splice

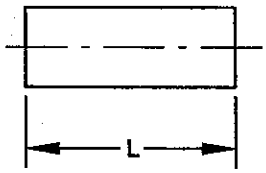

CTC/123

Stud size mm	Stud size BA/in	W mm	L mm	C mm	NATO Stock No. or Reference No.	AMP Part No.
-	-	-	7.7	-	5X/ 5940-99-1970090	34130

Butt splice

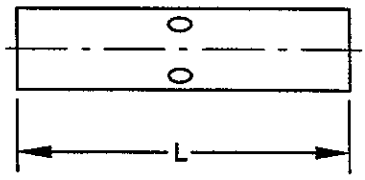

CTC/124

Stud size mm	Stud size BA/in	W mm	L mm	C mm	NATO Stock No. or Reference No.	AMP Part No.
-	-	-	15.0	-	5940-99-5805968	31818

TABLE 4 SOLISTRAND TERMINATIONS FOR CABLES: CMA 2,050 TO 5,180, CSA 1.04 TO 2.6 MM², CABLE SIZE CODE 16 TO 14

Ring tongue

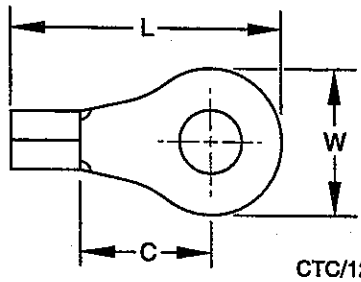

CTC/125

Stud size mm	Stud size BA/in	W mm	L mm	C mm	NATO Stock No. or Reference No.	AMP Part No.
2	8	4.6	11.3	4.3	110H/ 5940-99-6277797	328377
2.5	6	6.4	12.2	4.3	10H/ 5940-99-1073180	34119
3.5	4	8.7	16.2	7.1	5940-99-9567639	34121
3.5	4	6.4	12.2	4.3	10H/ 5940-99-6318574	34120
3.5	4	7.9	15.0	6.4	10H/ 5940-99-9997800	321684
4	3	8.7	16.2	7.1	5940-99-7958937	34122
4.5	2	8.7	16.2	7.1	110H/ 5940-00-5498991	34123
5	-	8.7	16.2	7.1	5940-99-7349982	130106
6	0	11.9	21.7	11.1	10H/ 5940-99-6202552	34124
8	5/16	11.9	21.7	11.1	5940-99-1054611	34125
9.5	3/8	13.5	25.3	13.9	10H/ 5940-99-9448180	34126

Rectangular tongue

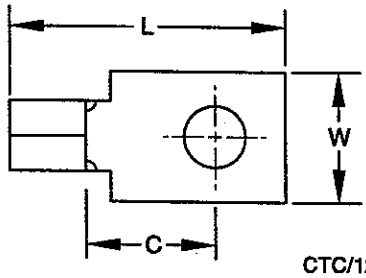

CTC/126

Stud size mm	Stud size BA/in	W mm	L mm	C mm	NATO Stock No. or Reference No.	AMP Part No.
3/3.5	4	7.5	13.4	5.2	5940-99-2222409	34266

Spade tongue

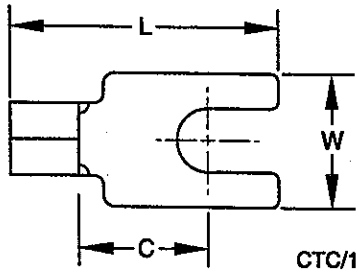

CTC/127

Stud size mm	Stud size BA/in	W mm	L mm	C mm	NATO Stock No. or Reference No.	AMP Part No.
3/3.5	4	7.5	13.5	5.2	5X/ 5940-99-1164296	322996
4.5	2	9.5	17.4	7.9	5X/ 5940-00-5007441	34129

TABLE 4 SOLISTRAND TERMINATIONS FOR CABLES: CMA 2,050 TO 5,180, CSA 1.04 TO 2.6 MM², CABLE SIZE CODE 16 TO 14 (Continued)

Flanged spade tongue

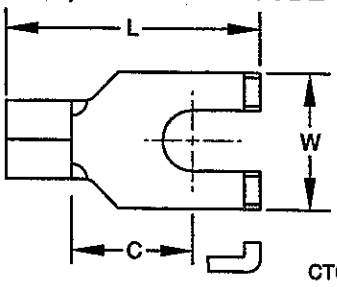

CTC/128

Stud size mm	Stud size BA/in	W mm	L mm	C mm	NATO Stock No. or Reference No.	AMP Part No.
3/3.5	4	7.5	13.1	5.2	5940-01-0109944	320855
4	3	7.5	13.1	5.2	5940-00-9932895	320856

Slotted ring tongue

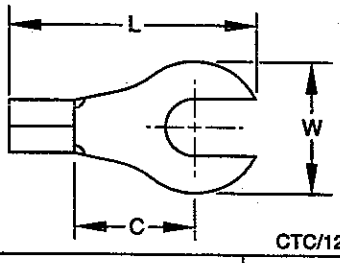

CTC/129

Stud size mm	Stud size BA/in	W mm	L mm	C mm	NATO Stock No. or Reference No.	AMP Part No.
6	0	11.9	20.7	11.1	5940-14-2691360	321087

Hook tongue

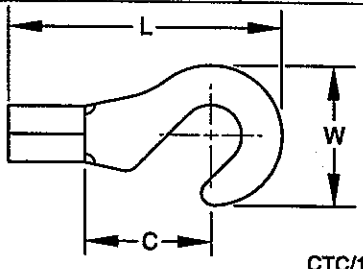

CTC/130

Stud size mm	Stud size BA/in	W mm	L mm	C mm	NATO Stock No. or Reference No.	AMP Part No.
4	3	8.7	16.2	7.1	5940-01-2721730	320257

Wire pin

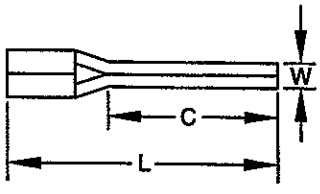

CTC/131

Stud size mm	Stud size BA/in	W mm	L mm	C mm	NATO Stock No. or Reference No.	AMP Part No.
-	-	1.8	14.2	6.8	5X/ 5999-99-4672388	165045

TABLE 4 SOLISTRAND TERMINATIONS FOR CABLES: CMA 2,050 TO 5,180, CSA 1.04 TO 2.6 MM², CABLE SIZE CODE 16 TO 14 (Continued)

Parallel splice

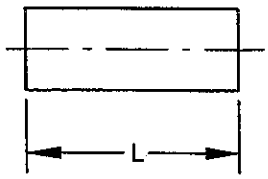

CTC/132

Stud size mm	Stud size BA/in	W mm	L mm	C mm	NATO Stock No. or Reference No.	AMP Part No.
-	-	-	7.7	-	5X/ 5940-99-8777183	34137

Butt splice

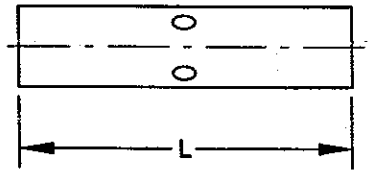

CTC/134

Stud size mm	Stud size BA/in	W mm	L mm	C mm	NATO Stock No. or Reference No.	AMP Part No.
-	-	-	14.5	-	5X/ 5940-99-1113907	31819

Ring tongue (heavy duty)

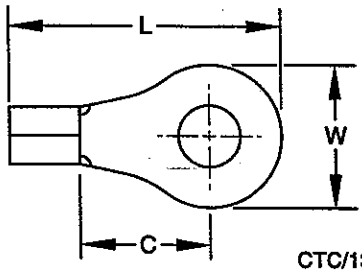

CTC/135

Stud size mm	Stud size BA/in	W mm	L mm	C mm	NATO Stock No. or Reference No.	AMP Part No.
3/3.5	4	8.7	18.4	7.1	5940-00-5777142	322833
4	3	8.7	18.4	7.1	5940-01-2597763	35432
6	0	12.7	22.0	8.73	10H/ 5940-99-7231955	35775
9.5	3/8	13.5	24.7	11.1	5940-00-1133147	322832
16	5/8	31.8	48.2	25.4	5940-00-3215317	320758

TABLE 5 SOLISTRAND TERMINATIONS FOR CABLES: CMA 5,180 TO 13,100, CSA 2.63 TO 6.63 MM², CABLE SIZE CODE 12 TO 10

Ring tongue

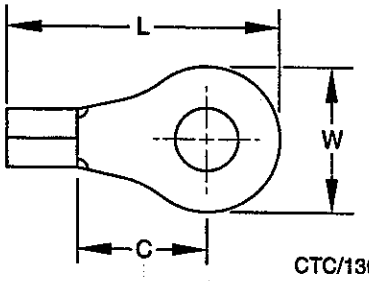

CTC/136

Stud size mm	Stud size BA/in	W mm	L mm	C mm	NATO Stock No. or Reference No.	AMP Part No.
3/3.5	4	7.1	16.0	5.6	10H/ 5940-99-1935492	35476
3/3.5	4	9.5	19.3	7.7	5940-99-7637256	33456
4	3	7.9	18.0	7.1	5940-99-1146249	322454
4	3	9.5	19.3	7.7	110H/ 5940-99-1169284	32994
4.5	2	8.7	18.4	7.1	110H/ 5940-00-1141300	322455
4.5	2	9.5	19.3	7.7	10H/ 5940-99-8140841	33457
4.5	2	12.7	22.0	8.7	110H/ 5940-01-1680192	35771
4.5	2	13.5	25.5	11.9	5940-99-6338147	36451
5	-	9.5	19.1	7.7	5940-99-6338860	130191
6	0	12.7	22.0	8.7	5940-99-7896031	35772
6	0	13.5	25.5	11.9	110H/ 5940-00-6367900	33458
8	5/16	13.5	25.5	11.9	10H/ 5940-99-9012953	33459
9.5	3/8	15.1	27.9	13.5	10H/ 5940-99-1935491	33220
9.5	3/8	19.1	32.3	15.9	5940-99-5237009	322242
12	1/2	19.1	32.3	15.9	5940-99-7235580	35135
16	5/8	31.8	48.2	25.4	5940-00-6159269	320764

Spade tongue

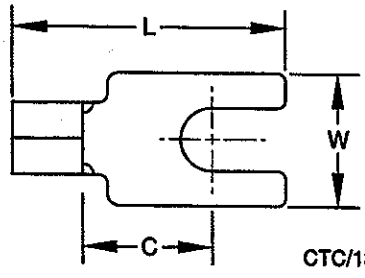

CTC/137

Stud size mm	Stud size BA/in	W mm	L mm	C mm	NATO Stock No. or Reference No.	AMP Part No.
3/3.5	4	7.4	16.0	5.5	10H/ 5940-99-7722671	322451
4	3	8.0	22.8	11.9	5940-99-0272454	130499
4.5	2	10.3	19.6	7.5	5940-99-1320693	33479

TABLE 5 SOLISTRAND TERMINATIONS FOR CABLES: CMA 5,180 TO 13,100, CSA 2.63 TO 6.63 MM², CABLE SIZE CODE 12 TO 10 (Continued)

Flanged spade tongue

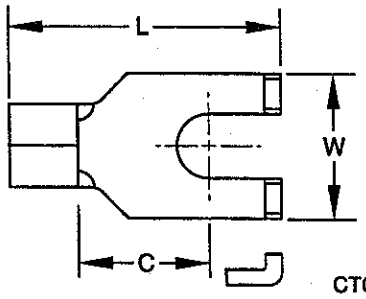

CTC/138

Stud size mm	Stud size BA/in	W mm	L mm	C mm	NATO Stock No. or Reference No.	AMP Part No.
3/3.5	4	7.5	17.6	6.4	5940-99-1054393	324578
4	3	7.5	17.6	6.4	5940-01-1227353	323143
4.5	2	7.5	17.6	6.4	5940-01-1685068	323144

Slotted ring tongue

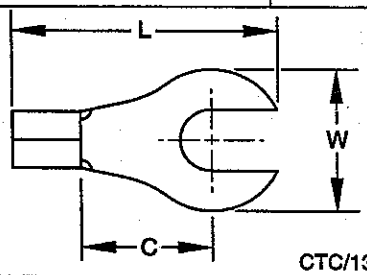

CTC/139

Stud size mm	Stud size BA/in	W mm	L mm	C mm	NATO Stock No. or Reference No.	AMP Part No.
4.5	2	9.5	18.1	7.1	5940-99-7602097	322456
6	0	13.5	24.6	11.9	5940-99-6350456	35680

Wire pin

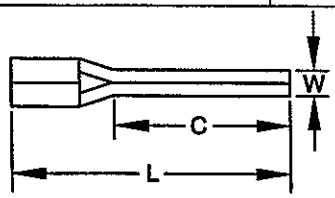

CTC/140

Stud size mm	Stud size BA/in	W mm	L mm	C mm	NATO Stock No. or Reference No.	AMP Part No.
-	-	2.6	20.6	9.9	5940-99-2145869	165048

TABLE 5 SOLISTRAND TERMINATIONS FOR CABLES: CMA 5,180 TO 13,100, CSA 2.63 TO 6.63 MM², CABLE SIZE CODE 12 TO 10 (Continued)

Parallel splice

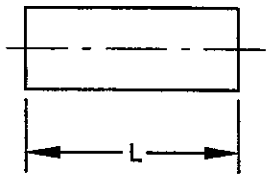

CTC/141

Stud size mm	Stud size BA/in	W mm	L mm	C mm	NATO Stock No. or Reference No.	AMP Part No.
-	-	-	8.7	-	5X/ 5935-99-4500505	34138

Butt splice

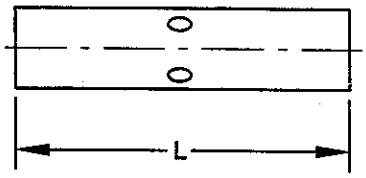

CTC/142

Stud size mm	Stud size BA/in	W mm	L mm	C mm	NATO Stock No. or Reference No.	AMP Part No.
-	-	-	14.4	-	5X/ 11491	32151

TABLE 6 SOLISTRAND TERMINATIONS FOR CABLES: CMA 13,100 TO 20,800, CSA 6.64 TO 10.5 MM², CABLE SIZE CODE 8

Ring tongue

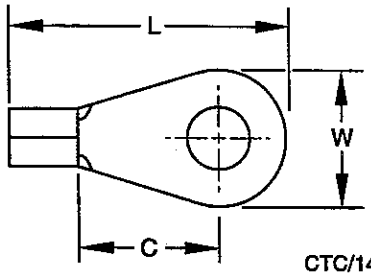

CTC/143

Stud size mm	Stud size BA/in	W mm	L mm	C mm	NATO Stock No. or Reference No.	AMP Part No.
4	3	11.9	23.7	9.1	5X/ 5940-99-6191203	32996
4.5	2	11.9	23.7	9.1	10H/ 5940-99-1039031	33460
5	-	11.9	23.7	9.1	5940-99-7923153	160013
6	0	11.9	23.8	9.1	110H/ 5940-99-1169285	33461
6	0	15.1	29.7	13.5	5940-99-7923152	35247
8	5/16	15.1	29.7	13.5	5940-99-2073018	33462
8	5/16	14.3	27.3	10.3	10H/ 5940-99-2300480	31808
9.5	3/8	15.1	29.7	13.5	10H/ 5940-99-1196850	33463
9.5	3/8	31.8	42.9	25.4	5940-99-1080169	36499
10	-	15.1	29.7	13.5	5940-99-3204529	160056
12	1/2	31.8	49.9	25.4	5940-99-3200790	35664
16	5/8	31.8	49.9	25.4	5940-00-6158838	35665

Parallel slice

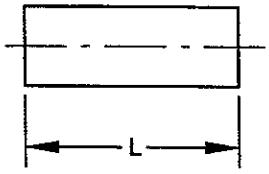

CTC/144

Stud size mm	Stud size BA/in	W mm	L mm	C mm	NATO Stock No. or Reference No.	AMP Part No.
-	-	-	9.5	-	5X/ 5940-99-9145366	34318

Butt splice

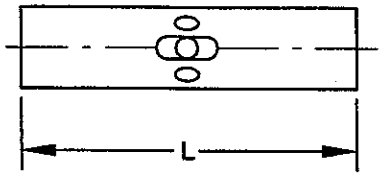

CTC/145

Stud size mm	Stud size BA/in	W mm	L mm	C mm	NATO Stock No. or Reference No.	AMP Part No.
-	-	-	21.0	-	5X/ 5940-99-1067672	36906

TABLE 7 SOLISTRAND TERMINATIONS FOR CABLES: CMA 20,800 TO 33,100, CSA 10.6 TO 16.8 MM², CABLE SIZE CODE 6

Ring tongue

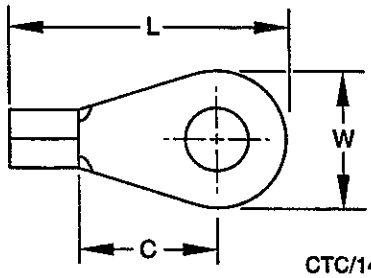

CTC/146

Stud size mm	Stud size BA/in	W mm	L mm	C mm	NATO Stock No. or Reference No.	AMP Part No.
4.5	2	15.9	31.6	13.5	110H/ 5940-00-5045889	33464
4.5	2	11.9	29.7	13.5	5X/ 14444	321298
5	-	11.9	29.7	13.5	5X/ 5940-99-1179399	130552
6	0	15.9	31.3	13.5	10H/ 5940-99-1954607	33465
8	5/16	15.9	31.6	13.5	5940-99-7399078	33466
9.5	3/8	15.9	31.6	13.5	110H/ 5940-99-6273825	33467
10	-	15.9	31.6	13.5	5940-99-7823530	160032
11	7/16	15.9	31.6	13.5	110H/ 5940-99-6621905	320745
12	1/2	31.8	51.6	25.4	110H/ 5940-00-5045877	36808
16	5/8	31.8	51.6	25.4	5940-99-9475788	36809

Parallel splice

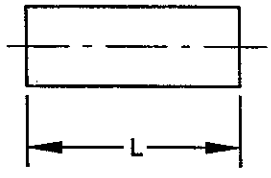

CTC/147

Stud size mm	Stud size BA/in	W mm	L mm	C mm	NATO Stock No. or Reference No.	AMP Part No.
-	-	-	11.1	-	5X/ 5940-99-6191205	34319

Butt splice

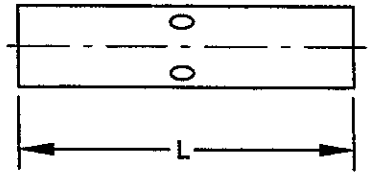

CTC/148

Stud size mm	Stud size BA/in	W mm	L mm	C mm	NATO Stock No. or Reference No.	AMP Part No.
-	-	-	25.8	-	5940-00-5008719	34322

TABLE 8 SOLISTRAND TERMINATIONS FOR CABLES: CMA 33,100 TO 52,600, CSA 16.9 TO 26.6 MM², CABLE SIZE CODE 4

Ring tongue

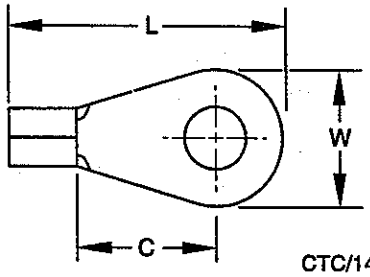

CTC/149

Stud size mm	Stud size BA/in	W mm	L mm	C mm	NATO Stock No. or Reference No.	AMP Part No.
4.5	2	16.7	33.4	13.1	5940-14-2309747	33468
4.5	2	12.7	30.5	11.1	5940-14-3270220	33114
6	0	16.7	33.4	13.1	10H/ 5940-99-1951290	33469
8	5/16	16.7	33.4	13.1	5940-50-2835398	33470
9.5	3/8	16.7	33.4	13.1	5940-99-5272979	33471
10	3/8	16.7	33.4	13.1	5940-99-8393886	160075
12	1/2	31.8	53.1	25.4	5940-99-5370663	35668
16	5/8	31.8	53.1	25.4	5940-00-6158833	35669

Parallel splice

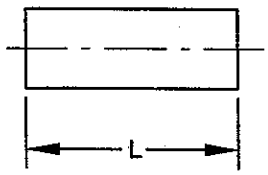

CTC/150

Stud size mm	Stud size BA/in	W mm	L mm	C mm	NATO Stock No. or Reference No.	AMP Part No.
-	-	-	13.5	-	5X/ 5940-99-4501677	34320

Butt splice

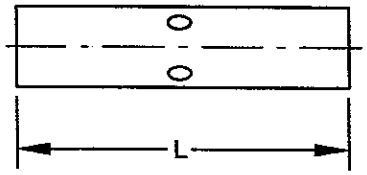

CTC/151

Stud size mm	Stud size BA/in	W mm	L mm	C mm	NATO Stock No. or Reference No.	AMP Part No.
-	-	-	29.0	-	5940-14-2286257	34323

TABLE 9 SOLISTRAND TERMINATIONS FOR CABLES: CMA 52,600 TO 83,700, CSA 26.7 TO 42.3 MM², CABLE SIZE CODE 2

Ring tongue

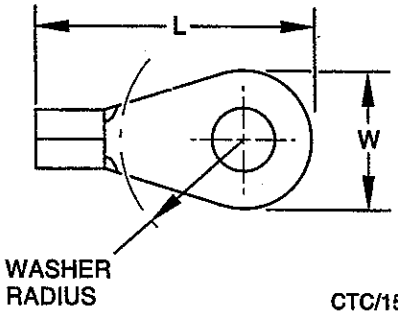

CTC/152

Stud size mm	Stud size BA/in	W mm	L mm	C mm	NATO Stock No. or Reference No.	AMP Part No.
4.5	2	15.9	38.8	13.5	5940-00-1150773	330301
6	0	15.9	38.8	13.5	5940-99-8269179	320383
6	0	22.6	42.1	13.5	5940-99-7924468	320138
8	5/16	15.9	38.8	13.5	5940-99-1080170	322870
8	5/16	22.6	42.1	13.5	5940-99-2073019	35183
9.5	3/8	15.9	38.8	13.5	5940-99-2073013	321600
10	3/8	22.2	42.0	17.4	5940-99-7924469	160002
11	7/16	22.6	42.1	13.5	5940-00-7545440	320741
12	1/2	20.6	41.2	13.5	5940-00-2311594	321602
12	1/2	22.6	42.1	13.5	10H/ 5940-99-7984494	35185
16	5/8	31.8	64.0	28.6	10H/ 5940-99-9511014	320754

Parallel splice

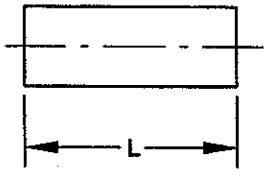

CTC/153

Stud size mm	Stud size BA/in	W mm	L mm	C mm	NATO Stock No. or Reference No.	AMP Part No.
-	-	-	16.3	-	5940-00-8533987	35187

Butt splice

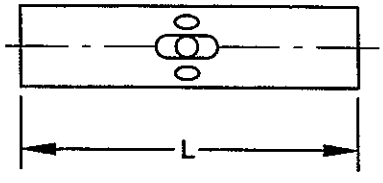

CTC/154

Stud size mm	Stud size BA/in	W mm	L mm	C mm	NATO Stock No. or Reference No.	AMP Part No.
-	-	-	32.1	-	5X/ 5935-99-4501530	322246

TABLE 10 SOLISTRAND TERMINATIONS FOR CABLES: CMA 83,700 TO 119,500, CSA 42.4 TO 60.5 MM², CABLE SIZE CODE 1/0

Ring tongue

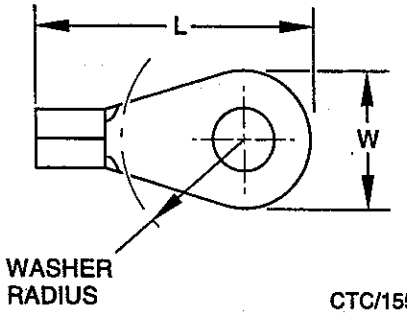

CTC/155

Stud size mm	Stud size BA/in	W mm	L mm	C mm	NATO Stock No. or Reference No.	AMP Part No.
6	0	20.5	48.9	15.9	5940-00-8261512	321866
6	0	22.2	49.7	15.9	5940-14-2309749	36915
8	5/16	20.5	48.9	15.9	5940-00-6886009	321867
8	5/16	22.2	49.7	15.9	10H/ 5940-99-7380970	36916
9.5	3/8	22.2	49.7	15.9	5940-99-7648365	36917
10	3/8	22.2	49.7	15.9	5940-12-1537899	160000
11	7/16	22.2	49.7	15.9	5940-00-7545438	36918
12	1/2	22.2	49.7	15.9	10H/ 5940-99-1954606	36919
12	1/2	31.8	68.0	28.6	5940-14-3541260	322291
16	5/8	31.8	68.0	28.6	5940-14-2887838	320744

Parallel splice

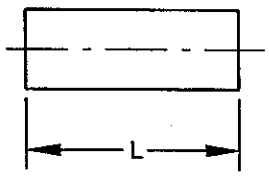

CTC/156

Stud size mm	Stud size BA/in	W mm	L mm	C mm	NATO Stock No. or Reference No.	AMP Part No.
-	-	-	18.7	-	5940-14-2691371	36946

Butt splice

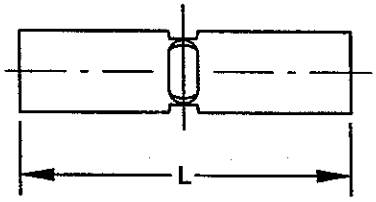

CTC/157

Stud size mm	Stud size BA/in	W mm	L mm	C mm	NATO Stock No. or Reference No.	AMP Part No.
-	-	-	36.1	-	5940-14-2691306	36957

TABLE 11 SOLISTRAND TERMINATIONS FOR CABLES: CMA 119,500 TO 150,500, CSA 60.6 TO 76.2 MM², CABLE SIZE CODE 2/0

Ring tongue

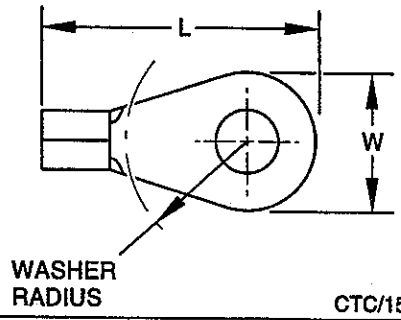

CTC/158

Stud size mm	Stud size BA/in	W mm	L mm	C mm	NATO Stock No. or Reference No.	AMP Part No.
6	0	23.5	49.0	15.9	5940-01-0457591	321869
8	5/16	23.5	49.0	15.9	10H/ 5940-99-7380968	321870
8	5/16	23.7	50.8	15.9	5940-14-2866231	36922
9.5	3/8	23.7	50.8	15.9	5940-00-8339520	36923
12	1/2	23.7	50.8	15.9	5940-14-2691349	36925
16	5/8	31.8	67.9	28.6	10H/ 5940-99-9475787	322224

Parallel splice

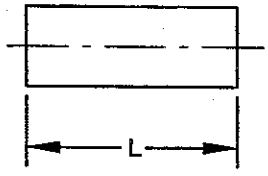

CTC/159

Stud size mm	Stud size BA/in	W mm	L mm	C mm	NATO Stock No. or Reference No.	AMP Part No.
-	-	-	18.7	-	5940-14-2691372	36948

Butt splice

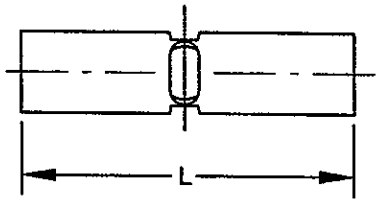

CTC/160

Stud size mm	Stud size BA/in	W mm	L mm	C mm	NATO Stock No. or Reference No.	AMP Part No.
-	-	-	36.5	-	5940-14-2286253	36958

TABLE 12 SOLISTRAND TERMINATIONS FOR CABLES: CMA 150,500 TO 190,000, CSA 76.3 TO 96.2 MM², CABLE SIZE CODE 3/0

Ring tongue

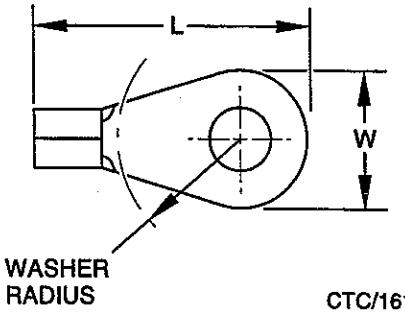

CTC/161

Stud size mm	Stud size BA/in	W mm	L mm	C mm	NATO Stock No. or Reference No.	AMP Part No.
9.5	3/8	25.9	53.7	15.9	5940-99-3986280	321875
10	3/8	27.0	54.4	15.8	5940-12-1659117	160003
12	1/2	27.0	54.4	15.9	5940-12-1659118	36929
16	5/8	31.9	68.6	28.6	5940-14-2286237	322222

Butt splice

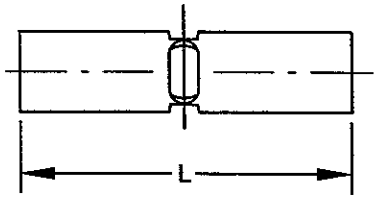

CTC/162

Stud size mm	Stud size BA/in	W mm	L mm	C mm	NATO Stock No. or Reference No.	AMP Part No.
-	-	-	37.6	-	5940-14-2286254	36959

TABLE 13 SOLISTRAND TERMINATIONS FOR CABLES: CMA 190,000 TO 231,100, CSA 96.3 TO 117 MM², CABLE SIZE CODE 4/0

Ring tongue

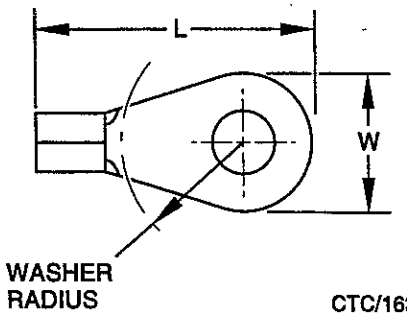

CTC/163

Stud size mm	Stud size BA/in	W mm	L mm	C mm	NATO Stock No. or Reference No.	AMP Part No.
9.5	3/8	29.0	56.0	15.9	5940-00-8770590	36932
12	1/2	27.0	55.3	15.9	5940-00-5293748	321880
12	1/2	29.0	56.0	15.9	5940-14-2691351	36934
16	5/8	31.8	69.4	27.4	10H/ 5940-99-9489798	322227

Parallel splice

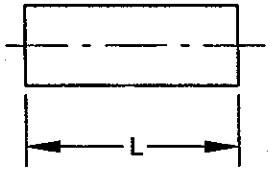

CTC/164

Stud size mm	Stud size BA/in	W mm	L mm	C mm	NATO Stock No. or Reference No.	AMP Part No.
-	-	-	19.4	-	5940-12-1782279	36951

Butt splice

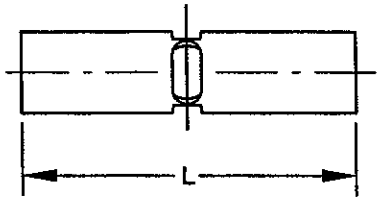

CTC/165

Stud size mm	Stud size BA/in	W mm	L mm	C mm	NATO Stock No. or Reference No.	AMP Part No.
-	-	-	37.7	-	5X/ 5935-99-1161532	36960

CHAPTER 2-5

AMP TERMINYL PRE-INSULATED RING TONGUE TERMINATIONS

CONTENTS

TERMINATIONS

Description (see Fig 1)

1 TERMINYL pre-insulated terminations are manufactured by AMP of GB Limited. They are designed to fit the larger cable ranges in the size code range 8 to 4/0 American Wire Gauge (AWG). The tables in this chapter cover this range.

2 Each termination consists of a one-piece, tin-plated annealed copper tongue and barrel which accepts a cable conductor. The barrel is covered by a moulded nylon insulation sleeve. The terminations are temperature rating to 105°C.

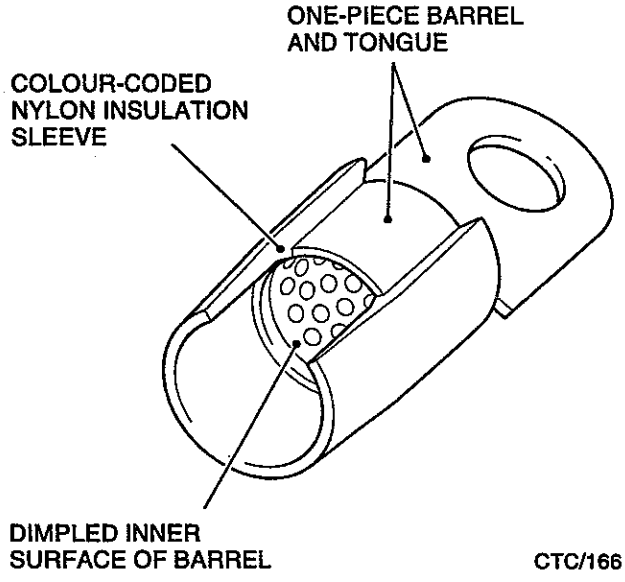

Fig 1 Construction of a TERMINYL termination

Size code

3 A cable size code, e.g. 8, is stamped on the underside of the face of the tongue of each termination and on the associated die halves. The code does not relate to the cable conductor size for service applications (see Chapter 1). The nylon insulation sleeve is colour coded according to the cable size code (see Tables 1 to 7). This colour is repeated, in dot form, on both the fixed and moving parts of each die set to aid selection of the correct die.

Die verification

4 During the crimping operation the stripped conductor and the cable insulation are inserted into the barrel and sleeve of the termination. The termination is then crimped to the conductor only. A size code (see Tables 1 to 7) is embossed by each half of the die set onto the termination sleeve to provide a means of checking, by the code's presence, that the correct die/termination combination has been used. The embossed numbers and the stamp code number on the underside of the termination must all be the same.

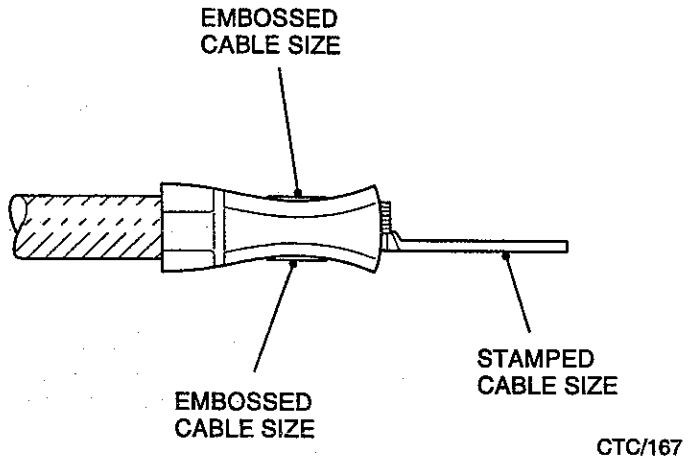

Fig 2 Die/termination check

NOTE

Identical numbers do not indicate that the correct cable/termination combination has been employed. This is decided by calculating the cable conductor size, as described in Chapter 1, then selecting the appropriate termination from the tables.

Insulation support

5 Cable insulation thickness for a given conductor size varies considerably.

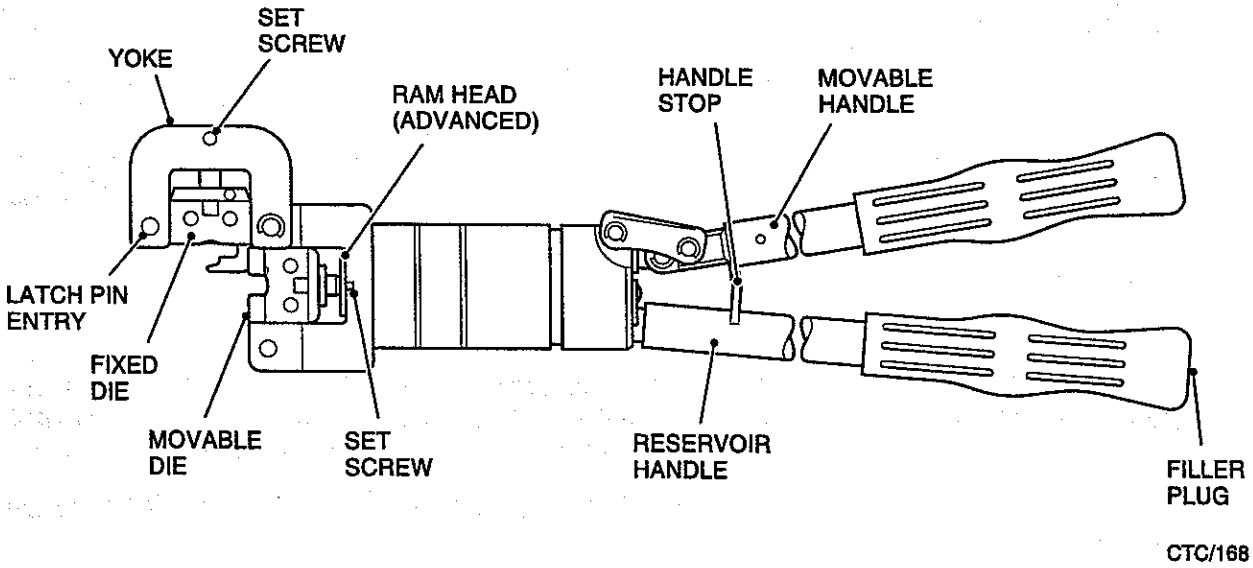

Fig 3 Hydraulic hand-operated crimping tool

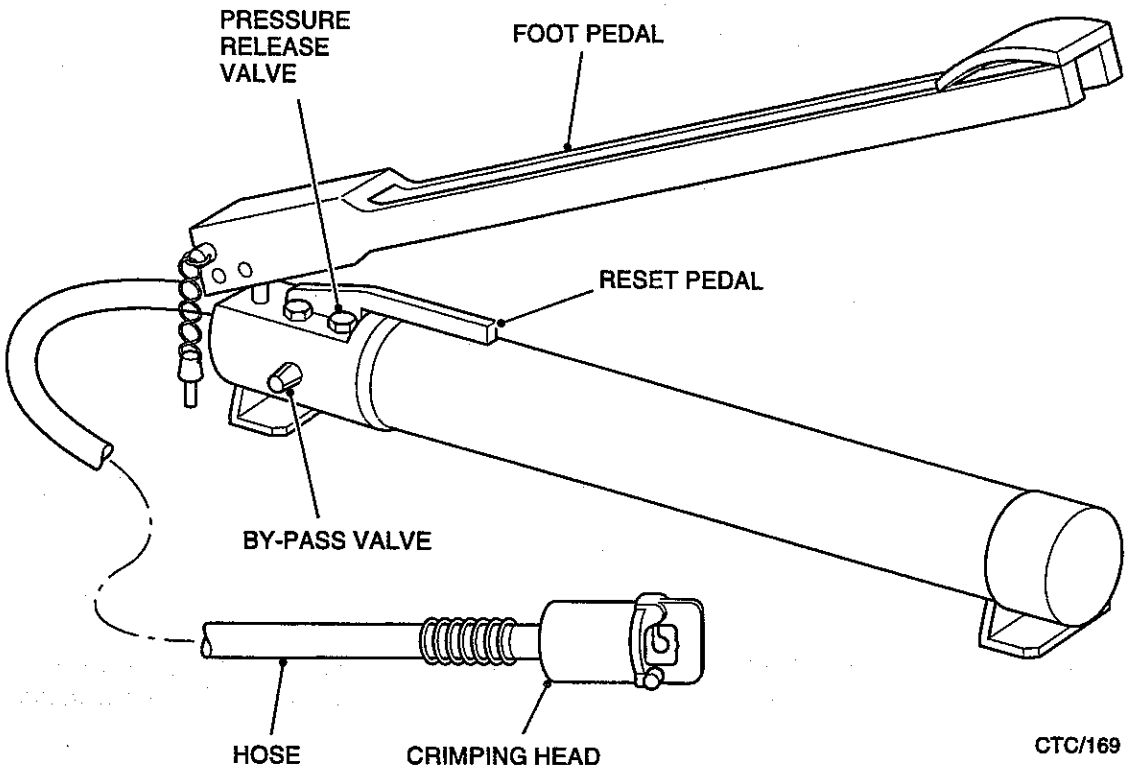

Fig 4 Hydraulic foot-operated crimping tool

TOOLS

Introduction

6 Two types of hydraulic crimping tool, each with its range of dies, are used for crimping TERMINYL ring tongue terminations.

6.1 Hand-operated hydraulic tool (see Fig 3). This tool (Part No. 69061) when fitted with the appropriate dies, is used to crimp terminations to cables in the size code range 8 to 2.

6.2 Foot-operated hydraulic tool (see Fig 4). This tool (Part Nos. Head - 69066, Foot - 781019), when fitted with the appropriate dies, is used to crimp terminations to cables in the size code range 1/0 to 4/0.

7 Tables 1 to 7 list the correct tool and dies for a particular termination.

WARNINGS

(1) POISON. HYDRAULIC FLUID IS POISONOUS, AND WHEN LEAKING UNDER PRESSURE CAN EASILY PENETRATE THE SKIN. DO NOT USE LEAKING TOOLS. DO NOT OPERATE THE FOOT PUMP WITHOUT A CRIMPING HEAD BEING ATTACHED.

(2) CRUSHED FINGERS. KEEP HANDS AND FINGERS CLEAR OF THE DIES WHEN PUMPING A TOOL TO ADVANCE THE RAM.

Inserting the dies (see Figs 3 and 5)

CAUTION

Equipment damage. Before using a tool for crimping, check that the yoke is closed and the latch pin is fully inserted otherwise damage to the dies will occur.

8 Dies are inserted in tools as follows:

8.1 Remove the latch pin on the tool head and open the yoke.

8.2 Loosen the setscrew in the yoke.

8.3 Before inserting the dies in the head, loosen the socket-head capscrews that hold the insulation crimping section of the dies in place. If the screws are not loosened dies may not fit into the head of the tool because of the close clearance.

8.4 Inset the stationary die (large shank) into the yoke. Tighten the setscrew.

8.5 Pump the tool to advance the ram until the setscrew is visible.

8.6 Loosen the setscrew in the ram and insert the movable die (small shank) into the well of the ram.

8.7 Tighten the setscrew and check that the movable die is properly orientated to mate with the stationary die.

8.8 Retighten the capscrews holding the insulation crimp section of the dies.

8.9 Retract the ram.

Cable stripping

9 When stripping insulation from a conductor the correct tool and blade must be used, dependent on the type of insulation. Detailed information on cable stripping is given in AP 113D-1700-1. The wire must be stripped to the correct length (as specified in Tables 1 to 7). It is essential that the insulation is removed without damaging the conductor.

TOOL OPERATION

Hand-operated tool (see Fig 3)

10 The movable die is retracted by twisting and holding the reservoir handle counter-clockwise. It is advanced by pumping the movable handle against the reservoir handle. The effort to advance the die increases during crimping until the maximum crimping pressure is reached, as indicated by a sudden decrease in pumping effort.

Foot-operated tool (see Fig 4)

11 The movable die is retracted by pressing the foot pump return pedal and is advanced by pumping the upper foot pedal. When pumping during crimping, a sudden decrease in effort is felt during the early stages. The effort required then increases again until the maximum crimping pressure is reached, as indicated by a snapping sound and a sudden decrease in pumping effort.

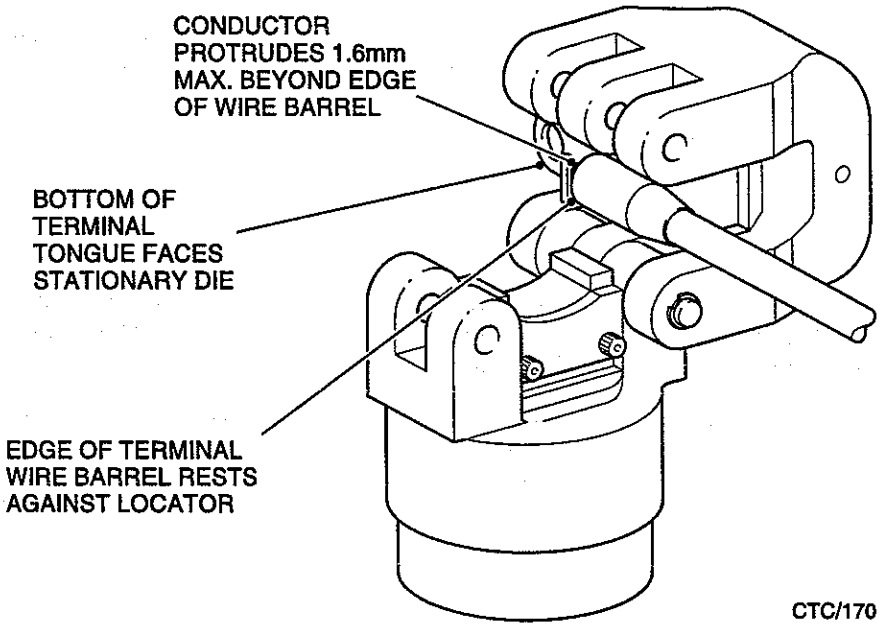

Fig 5 Correct location of termination in crimping tool

CRIMPING

Crimping procedure

12 The following procedure applies to all dies.

12.1 Check that the crimping tool is registered with the PTT NCO.

12.2 Retract the movable die.

12.3 Remove the latch pin and open the yoke.

12.4 Place the termination onto the movable die so that the barrel butts against the locator (see Fig 5).

12.5 Close the yoke and securely refit the latch pin.

12.6 Carefully advance the movable die until the termination is just held in place by the dies. Do not deform the termination.

12.7 Insert the correctly stripped cable into the termination barrel.

12.8 Hold the cable in position and complete the crimp by advancing the ram until the maximum pressure is reached.

12.9 Remove the latch pin, open the yoke and remove the termination. Rock the termination if it is stuck in the die.

Inspecting the crimp

13 Inspect the crimp as described below:

13.1 Check that the size code embossed on both sides of the termination barrel by the dies is the same as on the tongue.

13.2 Check that the conductor protrudes approximately 0.8 mm (1/32 in) from the barrel.

USE OF TABLES

14 Tables 1 to 7 contain all the information necessary to identify the correct termination for a particular application together with its reference number. The cable stripping length is shown for each termination and also the correct die and tool.

15 The cable size code is included in the tables for reference only. The actual conductor size, circular mil area (CMA) and cross sectional area (CSA) must be determined either by measurement or by reference to specifications.

16 Before referring to the tables the following information is required. This must be obtained either by measurement or from specifications (check both where confusion may exist).

16.1 Cable conductor CMA or CSA (refer to Chapter 1) and cable insulation overall diameter.

16.2 Termination type, stud size and dimensions.

17 With the information at Para 16, identify the appropriate table. From the illustrations locate the required section of the table. Then by reference to stud size, cable insulation range, etc the termination reference number is obtained. Stripping length and crimping tool details are specified in each table header and apply to all the terminations listed in that table.

TABLE 1 TERMINYL TERMINATIONS FOR CABLES: CMA 13,100 TO 20,800, CSA 6.64 TO 10.5 MM², CABLE SIZE CODE 8

Terminal/die colour	: Red/Red dot	Tool Ref No.	: 1M/5120-00-8534513
Cable size code	: 8	Tool Part No.	: 69061
Cable strip length	: 8 to 9.5 mm	Die Ref No.	: 1M/5120-00-8922404
		Die Part No.	: 47820

Ring tongue

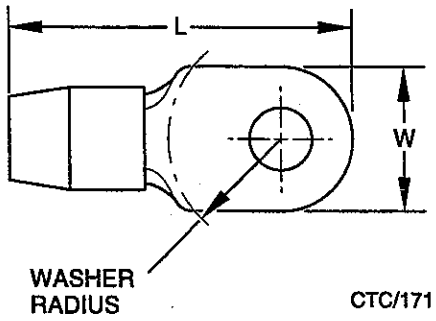

Stud size mm	Stud size BA/in	Max. Insul'n diam. mm	W mm	L mm	Max. washer radius mm	NATO Stock No. or Reference No.	AMP Part No.
4	3	6.5	12.1	36.2	11.1	5940-00-9550237	53041
4.5	2	6.5	11.0	35.6	11.1	5X/ 5940-99-6218292	324043
6	0	6.5	12.1	36.2	11.1	5940-00-1141305	324082
8	5/16	6.5	14.9	39.2	12.7	5940-99-7737611	324044
9.5	3/8	6.5	14.9	39.2	12.7	110H/ 5940-00-5574345	324045

TABLE 2 TERMINYL TERMINATIONS FOR CABLES: CMA 20,800 TO 33,100, CSA 10.6 TO 16.8 MM², CABLE SIZE CODE 6

Terminal/die colour	: Blue/Blue dot	Tool Ref No.	: 1M/5120-00-8534513
Cable size code	: 6	Tool Part No.	: 69061
Cable strip length	: 11 to 12.5 mm	Die Ref No.	: 1M/5120-00-8922405
		Die Part No.	: 47821

Ring tongue

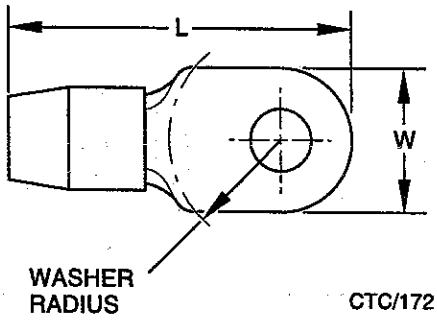

Stud size mm	Stud size BA/in	Max. Insul'n diam. mm	W mm	L mm	Max. washer radius mm	NATO Stock No. or Reference No.	AMP Part No.
4.5	2	8.0	11.9	40.0	10.7	5X/ 5940-99-4501675	324046
6	0	8.0	12.7	43.2	13.1	5X/ 5940-99-6422966	324047
8	5/16	8.0	15.9	44.8	13.1	5940-99-7186252	324048
9.5	3/8	8.0	15.9	44.8	13.1	5X/ 5940-99-6253880	324049

TABLE 3 TERMINYL TERMINATIONS FOR CABLES: CMA 33,100 TO 52,600, CSA 16.9 TO 26.6 MM², CABLE SIZE CODE 4

Terminal/die colour	: Yellow/Yellow dot	Tool Ref No.	: 1M/5120-00-8534513
Cable size code	: 4	Tool Part No.	: 69061
Cable strip length	: 11 to 12.5 mm	Die Ref No.	: 1M/5120-00-8922406
		Die Part No.	: 47822

Ring tongue

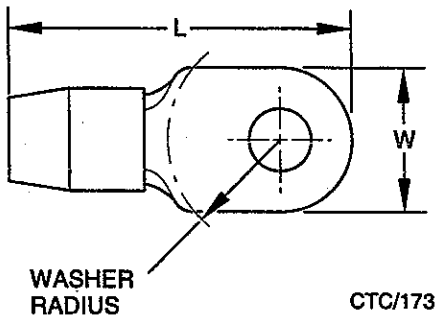

Stud size mm	Stud size BA/in	Max. Insul'n diam. mm	W mm	L mm	Max. washer radius mm	NATO Stock No. or Reference No.	AMP Part No.
6	0	9.7	13.9	46.0	13.5	5X/ 5940-99-4504006	324050
8	5/16	9.7	17.3	47.7	13.5	5X/ 5940-99-4504007	324051
9.5	3/8	9.7	17.3	47.7	13.5	5X/ 5940-99-4504008	324052

TABLE 4 TERMINYL TERMINATIONS FOR CABLES: CMA 52,600 TO 83,700, CSA 26.7 TO 42.3 MM², CABLE SIZE CODE 2

Terminal/die colour	: Red/Red dot	Tool Ref No.	: 1M/5120-00-8534513
Cable size code	: 2	Tool Part No.	: 69061
Cable strip length	: 11.5 to 13 mm	Die Ref No.	: 1M/5120-00-8922403
		Die Part No.	: 47823

Ring tongue

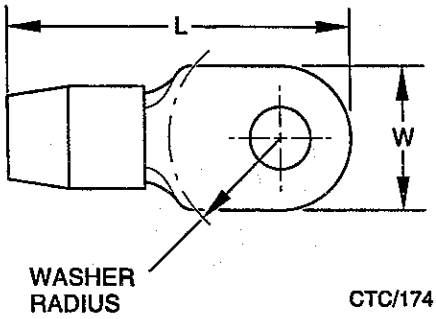

Stud size mm	Stud size BA/in	Max. Insul'n diam. mm	W mm	L mm	Max. washer radius mm	NATO Stock No. or Reference No.	AMP Part No.
6	0	12.0	17.2	52.0	14.7	5X/ 5940-99-6253879	324053
8	5/16	12.0	18.1	52.4	14.7	5940-99-7390198	324112
9.5	3/8	12.0	18.1	52.4	14.7	5X/ 5940-99-6324711	324054
12	1/2	12.0	21.7	54.2	14.7	110H/ 5940-00-1139831	324055

TABLE 5 TERMINYL TERMINATIONS FOR CABLES: CMA 83,700 TO 119,500, CSA 42.4 TO 60.5 MM², CABLE SIZE CODE 1/0

Terminal/die colour	: Blue/Blue dot	Tool Ref No.	: Head 1M/5110-00-1240201
Cable size code	: 1/0		: Pump 1M/4320-99-9775754
Cable strip length	: 18.6 to 20 mm	Tool Part No.	: Head, 69066. Pump, 781019
		Die Ref No.	: 1M/5120-99-1388559
		Die Part No.	: 47824

Ring tongue

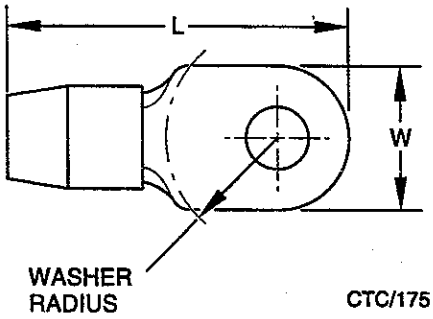

Stud size mm	Stud size BA/in	Max. Insul'n diam. mm	W mm	L mm	Max. washer radius mm	NATO Stock No. or Reference No.	AMP Part No.
6	0	14.7	20.5	61.6	15.9	5940-14-3855279	324056
8	5/16	14.7	20.5	61.6	15.9	5X/ 5940-99-6422965	324113
9.5	3/8	14.7	20.5	61.6	15.9	5X/ 5940-99-6422963	324057
12	1/2	14.7	22.2	62.3	15.9	5X/ 5940-99-6422964	324058

TABLE 6 TERMINYL TERMINATIONS FOR CABLES: CMA 119,500 TO 150,500, CSA 60.6 TO 76.2 MM², CABLE SIZE CODE 2/0

Terminal/die colour	: Yellow/Yellow dot	Tool Ref No.	: Head 1M/5110-00-1240201
Cable size code	: 2/0		: Pump 1M/4320-99-9775754
Cable strip length	: 18.6 to 20 mm	Tool Part No.	: Head, 69066. Pump, 781019
		Die Ref No.	: 1M/5120-00-4090391
		Die Part No.	: 47825

Ring tongue

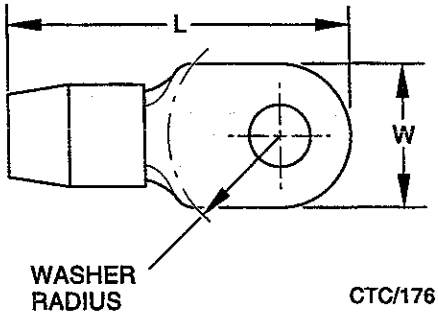

Stud size mm	Stud size BA/in	Max. Insul'n diam. mm	W mm	L mm	Max. washer radius mm	NATO Stock No. or Reference No.	AMP Part No.
8	5/16	15.5	23.5	61.4	15.9	5940-14-2697005	324083
9.5	3/8	15.5	23.5	61.4	15.9	5940-14-2697006	324084
12	1/2	15.5	23.5	61.4	15.9	5940-14-2697007	324085

TABLE 7 TERMINYL TERMINATIONS FOR CABLES: CMA 190,000 TO 231,100, CSA 96.3 TO 117 MM², CABLE SIZE CODE 4/0

Terminal/die colour	: Blue/Blue dot	Tool Ref No.	: Head 1M/5110-00-1240201
Cable size code	: 4/0		: Pump 1M/4320-99-9775754
Cable strip length	: 19.5 to 21 mm	Tool Part No.	: Head, 69066. Pump, 781019
		Die Ref No.	: 1M/5120-01-0091440
		Die Part No.	: 47918

Ring tongue

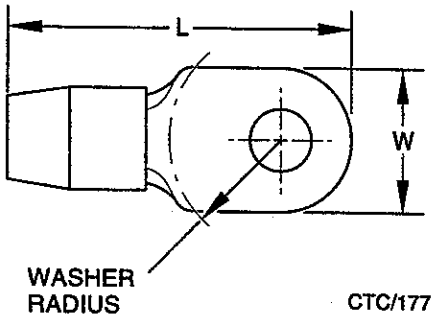

Stud size mm	Stud size BA/in	Max. Insul'n diam. mm	W mm	L mm	Max. washer radius mm	NATO Stock No. or Reference No.	AMP Part No.
9.5	3/8	19.3	29.0	72.6	15.9	5940-01-2606263	324187
12	1/2	19.3	29.0	72.6	15.9	110H/ 5940-00-1141321	324188

CHAPTER 2-6

AMP STRATOTHERM UNINSULATED, HIGH-TEMPERATURE TERMINATIONS

CONTENTS

Para

TERMINATIONS

Description (see Fig 1)

1 STRATOTHERM high temperature, uninsulated terminations are manufactured by AMP of GB Limited. They are similar to the thermocouple DIAMOND GRIP terminations described in Chapter 2-2.

2 Each termination consists of a one-piece tongue and barrel which accepts a cable conductor, over which an uninsulated copper insulation support sleeve is permanently secured. Terminations are rated to either 343°C (650°F) or 649°C (1200°F).

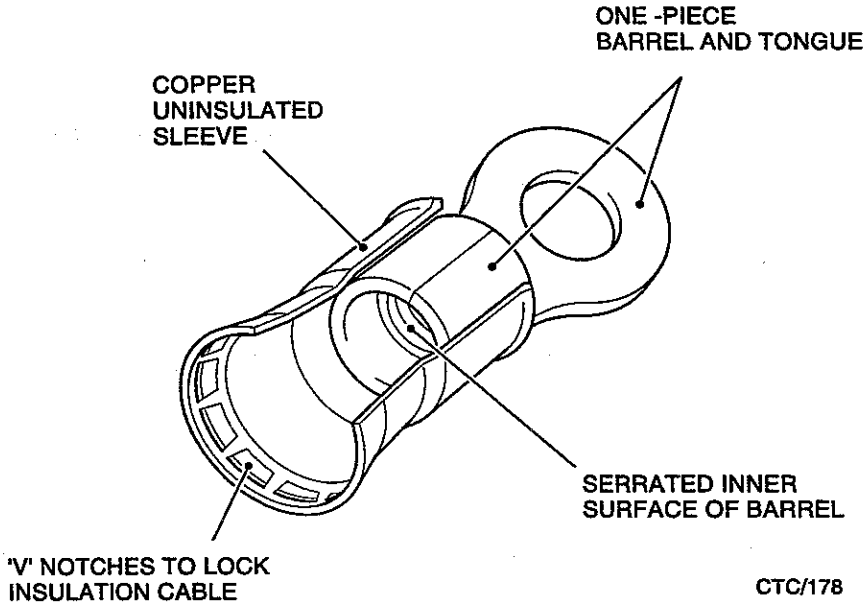

Fig 1 Construction of a STRATOTHERM uninsulated, high temperature termination

Size code

3 A cable size code, e.g. 12 - 10, is marked on the underside of the tongue of each termination and on the associated tool. This code does not relate to the cable conductor size for service applications (see Chapter 1

Dash code

4 A dash code, also known as hash mark, (see Tables 1 to 3) may be impressed into the underside of the termination support sleeve. The code's presence, or absence, indicates that the correct tool/termination combination has been used.

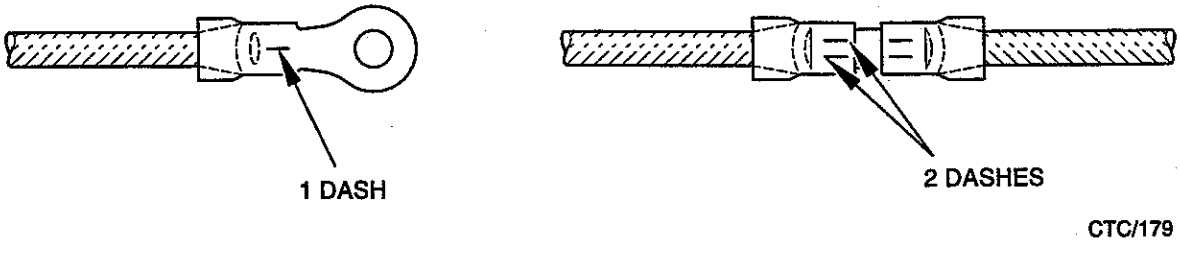

Fig 2 Dash code

NOTE

The dash code does not indicate that the correct cable/termination combination has been employed. This is decided by calculating the cable conductor size, as described in Chapter 1, then selecting the appropriate termination from the tables.

TOOLS

Introduction

5 Two types of hand-operated crimping tool may be used for crimping the thermocouple DIAMOND GRIP terminations - an 'A' frame type and a 'B' frame type (see Fig 3). The following description of how to adjust and operate tools applies to both types.

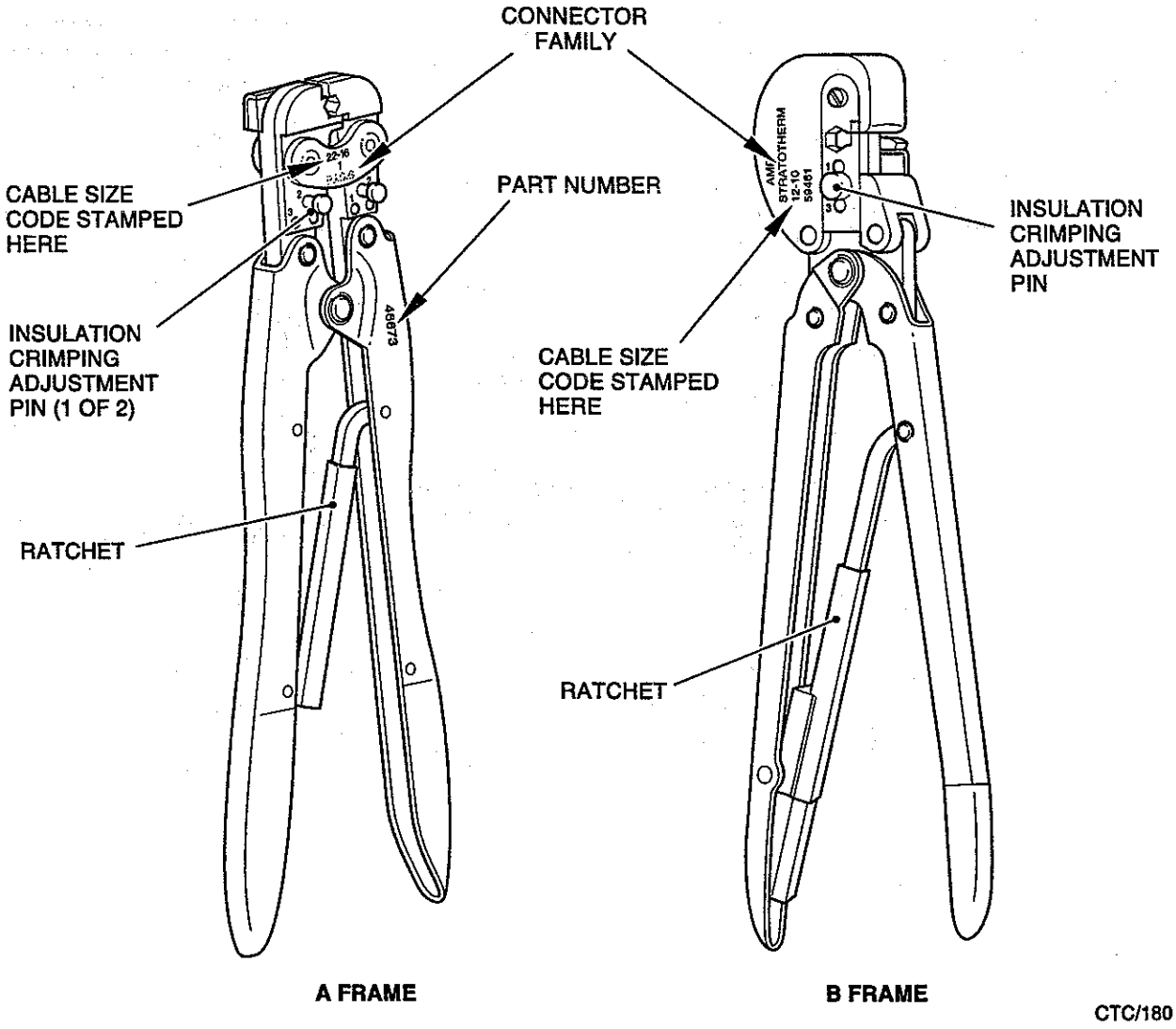

Fig 3 Hand-operated crimping tools

Insulation crimping adjustment

6 To ensure that when crimping a termination to a cable the cable insulation is not over or under crimped, the tool is provided with three insulation crimp setting positions. An adjustment pin, or pins, is inserted into one of these positions. The correct position for the pin must be determined by testing prior to actually crimping the termination to the cable.

7 Set the tool initially by inserting the adjustment pin or pins into position 3 and then proceed as follows:

7.1 Place the termination between the crimping jaws as shown in Fig 4.

7.2 Insert the unstripped cable into the insulation support sleeve of the termination.

7.3 Crimp the termination.

7.4 Remove the termination from the tool and check for correct crimping of the insulation support by holding the termination and bending the cable back and forth through 90 degrees and 180 degrees once only (see Fig 5). The termination should retain its grip on the cable insulation.

7.5 If the cable pulls out during the bending test then insert the adjustment pin or pins into the next lower position and repeat the test from Para 7.1 until the cable does not pull out.

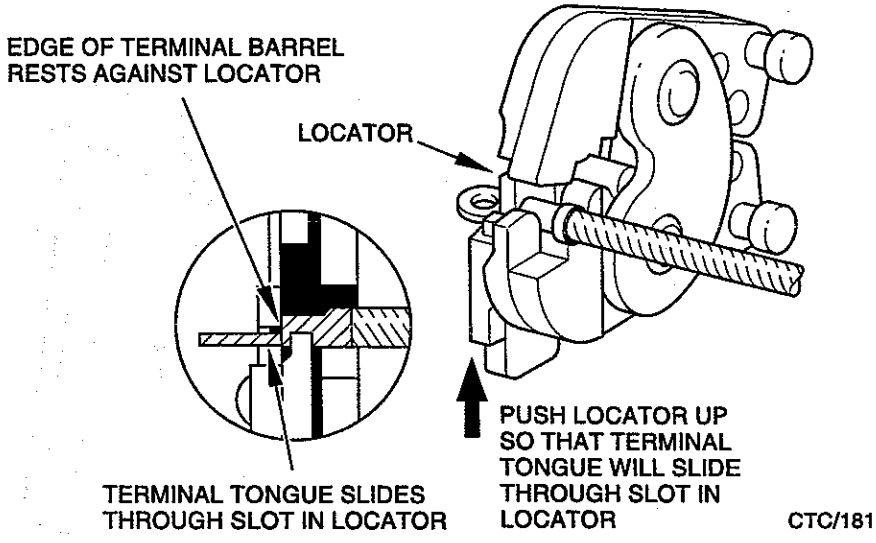

Fig 4 Correct location of termination tongue in crimping tool

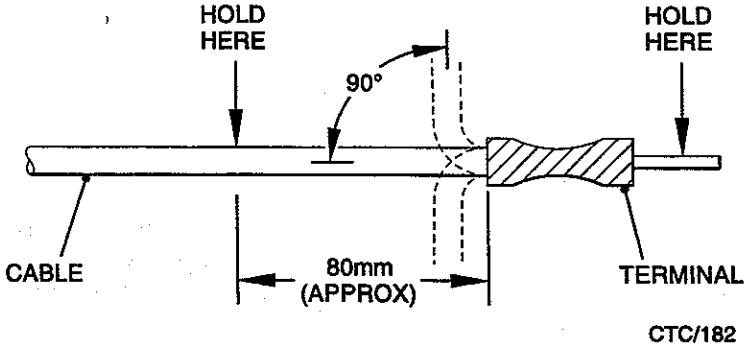

Fig 5 Insulation support test

Cable stripping

8 When stripping insulation from a conductor the correct tool and blade must be used, dependent on the type of insulation. Detailed information on cable stripping is given in AP 113D-1700-1. The wire must be stripped to the correct length (as specified in Tables 1 to 3). It is essential that the insulation is removed without damaging the conductor.

CRIMPING

Crimping procedure

9 The following procedure applies to both types of hand crimping tools (see Fig 3).

9.1 Check that the crimping tool is registered with the PTT NCO.

9.2 Open the crimping jaws by squeezing the handles until the ratchet releases. The jaws then open automatically.

9.3 Place the termination in the crimping jaws (see Fig 4) so that the barrel butts against the locator as shown.

9.4 Squeeze the handles until the termination is just held in place by the ratchet. Do not deform the termination.

9.5 Insert the correctly stripped cable into the termination barrel.

9.6 Hold the cable in position and complete the crimp by squeezing the handles until the ratchet releases.

Inspecting the crimp

10 Inspect the crimp as described below:

10.1 Check that the correct dash code is clearly impressed into the terminal insulation sleeve.

10.2 Check that the conductor protrudes approximately 0.8 mm (1/32 in) from the barrel.

USE OF TABLES

11 Tables 1 to 3 contain all the information necessary to identify the correct termination for a particular application together with its reference number. The cable stripping length is shown for each termination and also the correct tool with its dash code.

12 The cable size code is included in the tables for reference only. The actual conductor size, circular mil area (CMA) and cross sectional area (CSA) must be determined either by measurement or by reference to specifications.

13 Before referring to the tables the following information is required. This must be obtained either by measurement or from specifications (check both where confusion may exist).

13.1 Cable conductor CMA or CSA (refer to Chapter 1) and cable insulation overall diameter.

13.2 Termination type, stud size and dimensions.

14 With the information at Para 13, identify the appropriate table. From the illustrations locate the required section of the table. Then by reference to stud size, cable insulation range, etc the termination reference number is obtained. Stripping length and crimping tool details are specified in each table header and apply to all the terminations listed in that table.

TABLE 1 STRATOTHERM UNINSULATED, HIGH TEMPERATURE TERMINATIONS FOR CABLES: CMA 509 TO 3,260, CSA 0.3 TO 1.4 MM², CABLE SIZE CODE 22 TO 16

Cable size code	: 22 - 16	Tool Ref No.	: 1M/5120-99-1240764
Dash code	: 1	Tool Part No.	: 46673
Cable strip length	: 4.4 to 5.2 mm		

Uninsulated ring tongue (with insulation support)

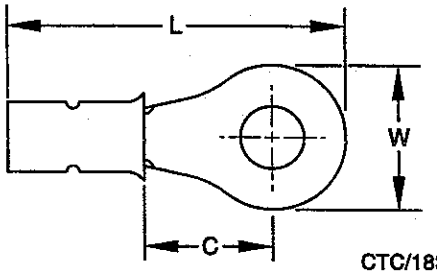

CTC/183

Stud size mm	Stud size BA/in	Insul'n diam. mm	Dimensions W mm	Dimensions L mm	Dimensions C mm	NATO Stock No. or Reference No.	AMP Part No.
Temperature rating 650°F (343°C)							
2.5	6	2.7 to 3.6	5.5	15.3	4.0	5X/ 5940-99-1932130	322363
3/3.5	4	2.7 to 3.6	7.1	18.5	6.4	5X/ 5940-99-1932127	323199
3/3.5	4	2.0 to 3.2	5.5	15.3	4.0	5X/ 5940-99-4501431	323151
3/3.5	4	2.7 to 3.6	5.5	15.3	4.0	5X/ 5940-99-4501114	322364
4	3	2.0 to 3.2	7.1	18.5	6.4	5X/ 5940-99-4501679	323152
4.5	2	2.0 to 3.2	7.1	18.5	6.4	5X/ 5940-99-1986548	323153
4.5	2	2.7 to 3.6	7.1	18.5	6.4	5X/ 5940-99-4501360	322366
6	0	2.0 to 3.2	11.9	25.6	11.1	5940-99-6080690	323154
6	0	2.7 to 3.6	11.9	25.6	11.1	5X/ 5940-99-4501361	322367
Temperature rating 1200°F (649°C)							
2.5	6	2.7 to 3.6	5.5	15.3	4.0	-	321887
3/3.5	4	2.7 to 3.6	7.1	18.5	6.4	5940-01-0438062	321892
4	3	2.7 to 3.6	7.1	18.5	6.4	5X/ 12808	321893
4	3	2.7 to 3.6	7.9	19.7	7.1	-	321897
4.5	2	2.7 to 3.6	7.1	18.5	6.4	-	321894
4.5	2	2.7 to 3.6	7.9	19.7	7.1	-	321898
6	0	2.7 to 3.6	11.9	25.6	11.1	5940-99-1089103	322320

TABLE 2 STRATOTHERM UNINSULATED, HIGH TEMPERATURE TERMINATIONS FOR CABLES: CMA 2,050 TO 5,180, CSA 1.25 TO 2.0 MM², CABLE SIZE CODE 16 TO 14

Cable size code	: 16 - 14	Tool Ref No.	: 1M/5120-99-1240765
Dash code	: 2	Tool Part No.	: 46988
Cable strip length	: 4.4 to 5.2 mm		

Uninsulated ring tongue (with insulation support)

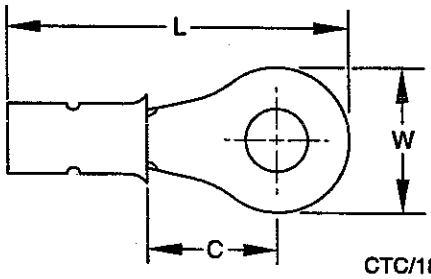

CTC/184

Stud size mm	Stud size BA/in	Insul'n diam. mm	Dimensions W mm	Dimensions L mm	Dimensions C mm	NATO Stock No. or Reference No.	AMP Part No.
Temperature rating 650°F (343°C)							
2.5	6	3.6 to 5.0	6.4	16.4	4.3	5X/ 5940-99-4501430	322371
3/3.5	4	2.7 to 3.8	6.4	16.4	4.3	5X/ 5940-99-1932129	323158
4	3	3.6 to 5.0	8.7	20.3	7.1	5940-00-9247880	322374
4.5	2	2.7 to 3.8	8.7	20.3	7.1	10H/ 5940-99-9555880	323161
4.5	2	3.6 to 5.0	8.7	20.3	7.1	5X/ 5940-99-4501362	322375
6	0	2.7 to 3.8	11.9	25.9	11.1	5X/ 5940-99-4501435	323162
Temperature rating 1200°F (649°C)							
3/3.5	4	3.6 to 5.0	6.4	16.4	4.3	5X/ 5330-99-5377529	322332
3/3.5	4	3.6 to 5.0	8.7	20.3	7.1	-	322336
4	3	3.6 to 5.0	8.7	20.3	7.1	5X/ 5940-99-6519549	322337
4.5	2	3.6 to 5.0	7.1	20.3	8.7	5940-00-6151476	322338
6	0	3.6 to 5.0	11.9	25.9	11.1	-	322341
9.5	3/8	3.6 to 5.0	13.5	29.4	13.9	-	322344

TABLE 3 STRATOTHERM UNINSULATED, HIGH TEMPERATURE TERMINATIONS FOR CABLES: CMA 5,180 TO 13,100, CSA 3.0 TO 6.0 MM², CABLE SIZE CODE 12 TO 10

Cable size code	: 12 - 10	Tool Ref No.	: 1M/5120-99-1240766
Dash code	: Nil	Tool Part No.	: 59461
Cable strip length	: 6.4 to 7 mm		

Uninsulated ring tongue (with insulation support)

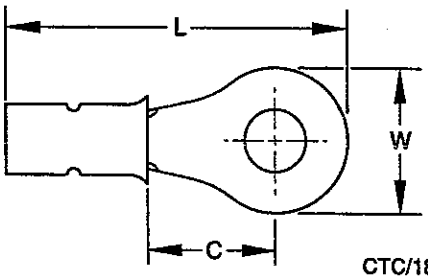

CTC/185

Stud size mm	Stud size BA/in	Insul'n diam. mm	Dimensions W mm	Dimensions L mm	Dimensions C mm	NATO Stock No. or Reference No.	AMP Part No.
Temperature rating 650°F (343°C)							
3/3.5	4	3.8 to 5.8	9.5	25.6	7.7	5X/ 5940-99-1970107	323066
4	3	3.8 to 5.8	9.5	25.6	7.7	5940-99-1970108	323067
4.5	2	3.8 to 5.8	9.5	25.6	7.7	5X/ 5940-99-9555881	323068
4.5	2	3.8 to 6.4	9.5	25.6	7.7	5940-00-1434794	325054
6	0	3.8 to 5.8	13.5	31.8	11.9	5X/ 5940-99-4501125	323069
Temperature rating 1200°F (649°C)							
3/3.5	4	3.8 to 5.8	9.5	25.1	7.1	-	323748
4	3	3.8 to 5.8	9.5	25.1	7.1	-	323749
4.5	2	3.8 to 5.8	9.5	25.1	7.1	-	323750
6	0	3.8 to 5.8	13.5	31.8	11.9	-	323751
8	5/16	3.8 to 5.8	13.5	31.8	11.9	-	323752