PART 5

CONTROLS AND INDICATORS

CONTROL AND INDICATORS

ILLUSTRATIONS

Fig.		Page
1	Cockpit controls and indicators	3/4

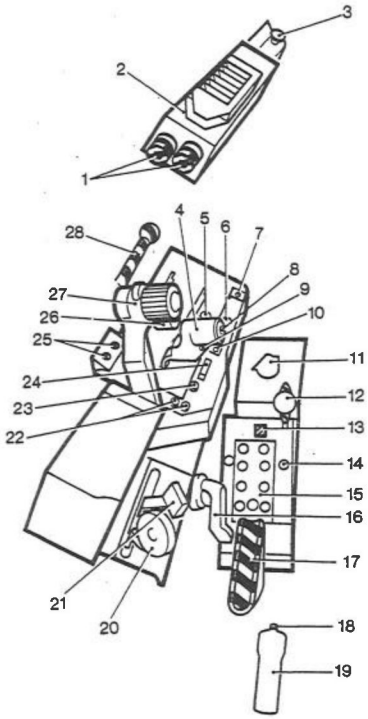

LEFT CONSOLE

1 FIRE EXTINGUISHER SWITCH/INDICATORS
2 STANDARD WARNING PANEL
3 AUDIO ALARM MUTE SWITCH
4 NO. 2 ENGINE HP COCK/THROTTLE CONTROL
5 NO. 2 ENGINE FAST IDLE THROTTLE STOP RELEASE
6 DE-ICE/RAIN DISPERSAL INDICATOR
7 FEEL SWITCH
8 R/T PRESS-TO-TRANSMIT SWITCH
9 AIR BRAKES SELECTOR SWITCH
10 DE-ICE/RAIN DISPERSAL SWITCH
11 ILS CHANNEL SELECTOR
12 UNDERCARRIAGE EMERGENCY LOWERING CONTROL
13 VENTRAL FUEL TANK EMERGENCY TRANSFER SWITCH
14 STANDBY UHF SET CHANNEL SWITCH
15 TACAN CONTROL PANEL
16 THROTTLE SERVO CONTROL
17 CANOPY JETTISON HANDLE
18 CANOPY OPEN/CLOSE SWITCH
19 CANOPY LOCKING/UNLOCKING HANDLE
20 WINDSCREEN DE-MIST CONTROL
21 RAM AIR VALVE CONTROL
22 ENGINE RELIGHT BUTTONS
23 ENGINE SHUT DOWN TRIGGER
24 RUDDER TRIM SWITCHES
25 JPT CONTROL SWITCHES
26 NO. 1 ENGINE HP COCK/THROTTLE CONTROL
27 AI RADAR HAND CONTROLLER
28 EMERGENCY CANOPY JACK RELEASE HANDLE

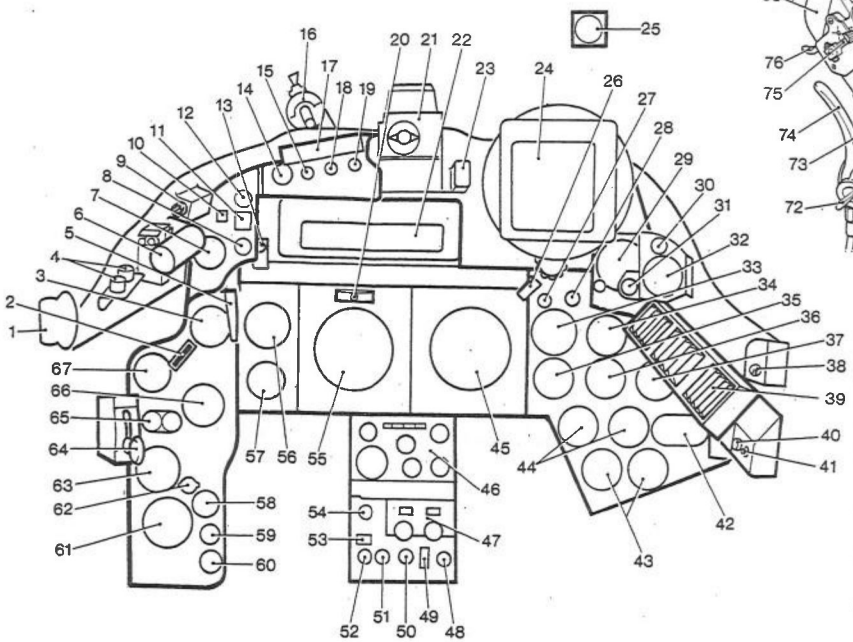

FRONT PANEL AND HAND CONTROL

1 HIGH INTENSITY LIGHT
2 BRAKE PARACHUTE STEAM HANDLE
3 STANDBY ALTIMETER
4 ALTERNATOR & GENERATOR FIELD RESET BUTTONS
5 ARRESTER HOOK HANDLE
6 SERVICES HYDRAULIC SYSTEM PRESSURE GAUGE
7 STANDBY AIR SPEED INDICATOR
8 BRAKE PARACHUTE JETTISON SWITCH
9 STORES JETTISON BUTTON
10 HIGH INTENSITY LIGHTS SWITCH
11 NORMAL/STANDBY INVERTER SWITCH
12 INSTRUMENT POWER SUPPLIES INDICATOR
13 HOOK DOWN INDICATOR LIGHT
14 OXYGEN FLOW INDICATOR
15 EMERGENCY LIGHTS SWITCH
16 STANDBY DIRECTION INDICATOR
17 FLIGHT REFUELLING PANEL
18 FLIGHT REFUELLING SWITCH
19 LIGHT FIGHTER SIGHT SWITCH
20 SLIP INDICATOR
21 LIGHT FIGHTER SIGHT
22 STRIP SPEED DISPLAY (IAS & MACH NO.)
23 ATTENTION LIGHT
24 CRT DISPLAY
25 STANDBY COMPASS
26 RUDDER BAR LEG REACH ADJUSTER
27 WING-TO-WING FUEL TRANSFER INDICATOR LIGHT
28 WING-TO-WING FUEL TRANSFER SWITCH
29 ACCELEROMETER
30 FCS MODE INDICATOR
31 TELEBRIEFING SWITCH/INDICATOR
32 VOLTMETER
33 OXYGEN PRESSURE GAUGE
34 CABIN ALTIMETER
35 FUEL GAUGE (PORT)
36 FUEL GAUGE (STARBOARD)
37 FUEL GAUGE (VENTRAL)
38 FREQUENCY CARD LIGHT SWITCH
39 AUXILIARY WARNINGS PANEL
40 AWP TEST BUTTON
41 AWP NIGHT/DAY SWITCH
42 NOZZLE POSITION INDICATOR
43 JPT INDICATORS
44 RPM INDICATORS
45 NAVIGATION DISPLAY
46 V/UHF CONTROL UNIT
47 TACAN OFFSET COMPUTER
48 ILS VOLUME CONTROL
49 ILS MASTER SWITCH
50 ILS/UHF HOMER INDICATOR SELECTION SWITCH
51 UHF HOMING INDICATOR SENSITIVITY SWITCH
52 AERIAL SELECTOR SWITCH
53 UHF POWER SWITCH
54 UHF SET SELECTOR SWITCH
55 ATTITUDE INDICATOR
56 MAIN ALTIMETER
57 RATE OF CLIMB/DIVE INDICATOR
58 AUTOPILOT TRIM INDICATOR
59 MRG FAST ERECTION SWITCH
60 MRG ON/OFF SWITCH
61 COMBINED TRIM & AIRBRAKE POSITION INDICATOR
62 FLAPS SELECTOR
63 UNDERCARRIAGE POSITION INDICATOR
64 UNDERCARRIAGE SELECTOR
65 FLAPS POSITION INDICATOR
66 STANDBY ARTIFICIAL HORIZON
67 BRAKE ACCUMULATOR PRESSURE GAUGE
68 TRIGGER GUARD
69 AILERON & TAILPLANE TRIM SWITCHES
70 LIGHT FIGHTER SIGHT CAGING SWITCH
71 CAMERA SWITCH
72 BRAKE PARKING CATCH
73 PRESS-TO-TRANSMIT SWITCH
74 WHEEL BRAKE LEVER
75 FCS ENGAGE SWITCH
76 FIRING TRIGGER

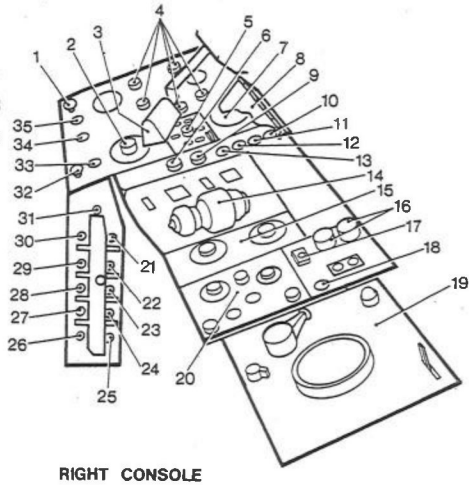

RIGHT CONSOLE

1 FLAP TANKS FUEL CONTENT BUTTON
2 MASTER ARMAMENT SELECTOR
3 SWINGING ARM LAMP
4 COCKPIT LIGHTING DIMMER SWITCH
5 ARMAMENT INDICATOR PANEL
6 ROCKET LAUNCHERS EMERGENCY RETRACT SWITCH/INDICATOR
7 CABIN AIR TEMPERATURE SELECTOR
8 FREQUENCY CARDS HOLDER
9 AI RECORDER SWITCH/INDICATOR
10 TAXY LIGHTS SWITCH
11 NAVIGATION LIGHTS SWITCH
12 CAMERA MASTER SWITCH
13 CAMERA IRIS SWITCH
14 FCS PILOTS CONTROLLER
15 SIF CONTROL UNIT
16 ENGINE START BUTTONS
17 NORMAL/STANDBY GENERATOR SWITCH
18 IFF MASTER SWITCH
19 OXYGEN DEMAND REGULATOR
20 IFF CONTROL UNIT
21 LP FUEL COCK NO. 2 ENGINE SWITCH
22 DC PUMPS STARBOARD WING TANKS SWITCH
23 CABIN AIR SWITCH
24 ENGINE MASTER SWITCH
25 FRONT WINDSCREEN HEATER SWITCH
26 PORT WINDSCREEN HEATERS & CANOPY BLOWER SWITCH
27 INSTRUMENT MASTER SWITCH
28 BATTERY MASTER SWITCH
29 DC PUMPS PORT WING TANKS SWITCH
30 LP FUEL COCK NO. 1 ENGINE SWITCH
31 PITOT & FUEL VENT VALVE HEATERS SWITCH
32 FIRE CONTROL RESET BUTTON
33 ARM/SAFE SWITCH
34 SALVO SELECTOR SWITCH
35 FUEL GAUGE TEST SWITCH

LACM 53.5.1-1 (S)

Fig. 1 Controls and Indicators