GROUP A1.

SYSTEM DETAILS

LIST OF CONTENTS

	Para.
Introduction	1
Referencing and General Servicing of Components	
Junction boxes	5
Servicing of junction boxes	8
Generator control and supply panels	10
Leg panel	11
Cabin port shelves	12
Cabin starboard shelf	13
Gun-firing panel	14
Radio relay box	15
Servicing of panels and shelves	16
Cable assemblies	18
Cables	20
Multi-pole plugs and sockets	21
Fuses	26
Circuit breakers	28
Relays	29
Switches	30
Terminal blocks	31
Filament lamps	32
Earth points	33
Circuit coding and group references	34
General servicing of system	
External supply socket	35
Rendering aircraft electrically safe	36
Use of spare cables for emergency servicing	37
Insulation resistance testing	38
Interpretation of diagrams	
General	39
Method of reading a theoretical diagram	42
Method of reading a routing chart	44
Cable abbreviations	49
Junction box, panel, and shelf wiring diagrams	50

LIST OF TABLES

	Table
Fuses	1
Circuit breakers	2
Filament lamps	3
Circuit codes and group references	4
Cable abbreviations	5

LIST OF ILLUSTRATIONS

	Fig.
Supply and earth routing chart	1
Available spare wiring—sheet 1	2
Available spare wiring—sheet 2	3
Typical routing and theoretical diagram	4

Introduction

1. This Group contains a general description of the electrical system, together with wiring details and general servicing information. Tables listing the ratings and references of the fuses, circuit breakers and filament lamps are also given, together with a loading chart including a circuit index. For detailed information concerning the standard items of equipment, reference should be made to the relevant Air Publications *(listed at the beginning of each Group of this Chapter)*.

2. This system is of the 28-volt, single-pole, earth return, voltage regulated type. It is supplied by two Type 515 generators, connected in parallel and stabilized by two Type C, 24-volt, 25 amp. hour batteries, which are connected in series and float across the output of the generators; the batteries are provided with protective covers.

3. The wiring cable assemblies are run between junction boxes and panels located at points convenient for distribution to the equipment and for breaking down the aircraft. The majority of the cable assemblies are provided with fully weatherproof multi-pole plug and socket breakdown points. Whenever possible the cable connections to the plug and socket pins are crimped. To facilitate servicing and testing, the earth return connections are restricted in number and taken to stud type earth points, which are shown on the cable assembly layout *(Group A.3, fig. 1)* and listed on the supply and earth routing chart, fig. 1 of this Group.

4. The generators are mounted on, and driven by, the auxiliary gearbox situated in the engine bay, and their control equipment is mounted on a panel located on the starboard side of the radio bay. The batteries are mounted on a platform also located in the radio bay. The supply from the genera-

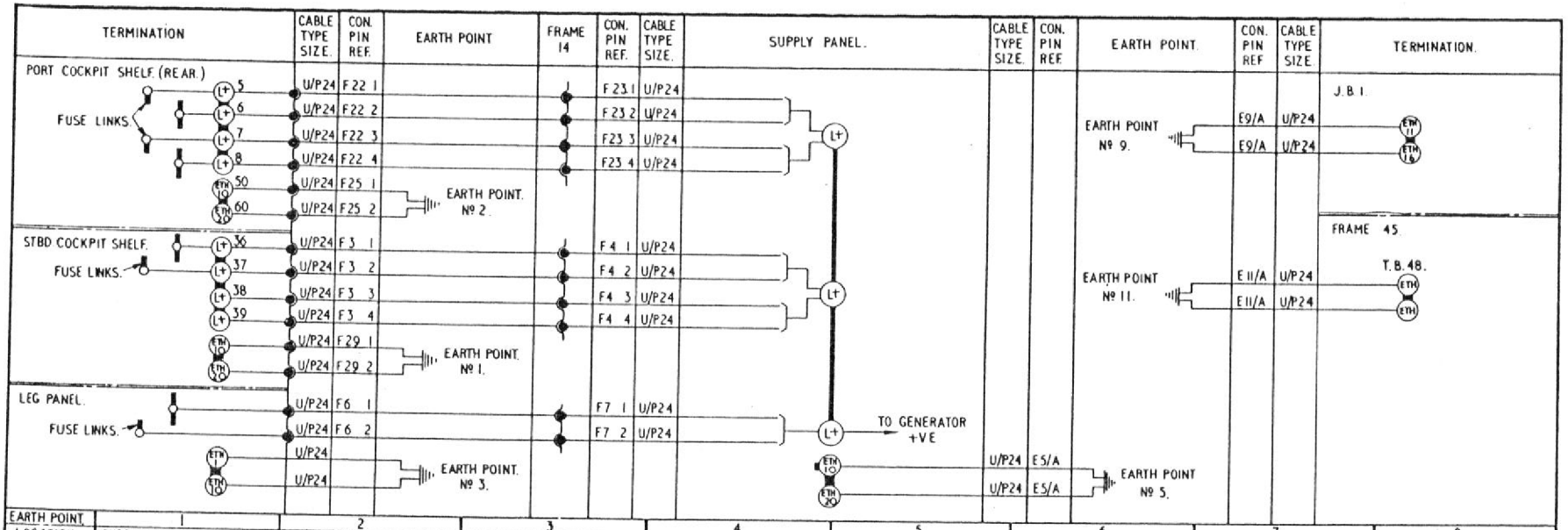

EARTH POINT.	1	2	3	4	5	6	7	8
LOCATION	STBD COCKPIT SHELF. SIDE WALL	PORT COCKPIT SHELF SIDE-WALL	LEG PANEL MTG. ANGLE.	HOOD FAIRING.	BATTERY MOUNTING.	GUN PACKAGE FORMER E.	GUN PACKAGE. KEEL MEMBER.	GUN PACKAGE. FORMER C.
SERVING.	STBD. COCKPIT SHELF.	PORT COCKPIT SHELF.	LEG PANEL.	TEMP CONTL VALVE ACTUATOR.	SUPPLY PANEL.	GUN PACKAGE.	INNER GUNS.	OUTER GUNS.
CIRCUIT	CABIN LIGHTING. FLIGHT INST. CONTROL. FUEL PRESSURE. FUEL CONTENTS. RADIO COMPASS A.C. DISTRIBUTION BOX. ENGINE TEMPERATURE. A.C. JUNCTION BOX. A.C. SUPPLIES. ARTIFICIAL HORIZON. FLIGHT INST. CONTROL. G.4.F. COMPASS. CABIN TEMPERATURE. RADAR RANGE.	AILERON TRIM. CABIN PRESSURIZATION. EMERGENCY FUEL PUMP. GYRO GUNSIGHT. HOOD CONTROL. HYDRAULIC PRESSURE. U/C CONTROL. U/C INDICATOR.	CABIN PRESSURIZATION ENGINE STARTER. FIRE WARNING. FUEL PRESSURE. GENERATORS & BATTERIES. GUNSIGHT MOUNTING. G.45. CAMERA. SERVICING LIGHTS. TURN & SLIP INDICATOR.	CABIN PRESSURIZATION.	RADIO COMPASS ENGINE TEMPERATURE. ENGINE STARTER. FIRE EXTINGUISHER. FUEL FILTER DE-ICING. FUEL CONTENTS. FUEL PRESSURE. GENERATORS & BATTERIES. GUN FIRING. GUN HEATING. GUN VENTILATION. SERVICING LIGHT. V.H.F. RADIO. GENERATORS & BATTERIES. TANK PUMPS. P.& S.	GUN FIRING.	GUN FIRING.	GUN FIRING.

EARTH POINT.	9	10	11	12	13	14	15
LOCATION	FRAME 25.	CENTRE FUSELAGE.	FRAME 45	RADIO EQPT. MOUNTINGS.		CONTROLS CASING (CABIN)	RADIO BAY. V.H.F. PANEL.
SERVING.	J.B.1.	Nº1 GENERATOR.	T.B.48.	TYPE 200 INVERTER.		TEL.–	TEL.– AND P TO T.–
CIRCUIT.	AILERON TRIM POSN. IND. CABIN PRESSURIZATION. EMERGENCY FUEL PUMP. ENGINE ANTICING. FIRE EXTINGUISHER. FLAP CONTROL. FLAP POSN. INDICATOR. FUEL PRESSURE. NAVIGATION LIGHTS. POWER AILERONS. PRESSURE HEAD HEATER. PRESSURE REFUELLING. SERVICING LIGHTS. U/C CONTROL. V.H.F. RADIO.	GENERATORS & BATTERIES.	RUDDER TRIM POSN. IND. NAVIGATION LIGHT. POWER ELEVATORS. TAILPLANE CONTROL. TAILPLANE POSN IND.	RADAR RANGE SUPPLY.		V.H.F. RADIO.	V.H.F. RADIO.

16	17	18	19
CENTRE FUSELAGE.	PORT WING	STBD. WING.	FRAME 54.
Nº 2 GENERATOR	DROP TANK TEST PLUG.	DROP TANK TEST PLUG	TELE. BRIEF EXTERNAL PLUG.
GENERATORS & BATTERIES.	DROP TANKS CONTROL.	DROP TANKS CONTROL.	V.H.F. RADIO.

B.188039.

THIS DRG. MUST NOT BE ALTERED WITHOUT REFERENCE TO THE ABOVE DRAWING.

B.199838 Issue 4 (Modified for Mk. 52)

Fig. 1. Supply and earth routing chart

RESTRICTED

tors and batteries to the fuse bus-bars is shown, together with the earth return points, on fig. 1 of this Group.

REFERENCING AND GENERAL SERVICING OF COMPONENTS

Junction boxes

5. These are of welded aluminium, waterproof construction with the insides suede finished to obviate chafing and condensation. They contain terminal blocks, fuse blocks and other equipment. Junction boxes are referenced numerically, with the exception of those which are labelled according to the circuits they feed, the numbers being preceded by the letters J.B. or, in the case of the armament junction boxes, ARM.J.B. Each box contains a wiring diagram. The terminals in the boxes are numbered and may be identified by reference to the wiring diagrams, spare terminals being starred on the diagrams to denote that they are spares. When a cable passes through a box without connecting to a terminal, the cable is wired pin to pin between its associated plugs *(i.e. pin A to pin A or pin B to pin B, etc.)*. The cable outlets on the junction boxes are either multi-pole plugs and sockets or rubber grommets.

6. Junction box 1 is the major box and is located at the bottom of the centre fuselage on the rear face of the main spar. Junction box 2 is located in the front fuselage above the cabin port shelf between frames 11 and 12 and is used mainly for distribution to the equipment on the port side of the cabin.

7. The A.C. junction box is mounted aft of the cabin starboard shelf, and is used to supply the flight instruments and radar installation. The ARM.J.B.1 is located on the forward face of the starboard fuel tank access panel on frame 19, above the battery platform. ARM.J.B.2 is mounted aft of the cabin port shelf. Both these junction boxes are used as breakdown and distribution points for the armament services.

Servicing of junction boxes

8. A regular examination of these boxes should be carried out to ensure that they are correctly supported, clean and undamaged. All the components in the boxes should also be examined for security, and an examination of the wiring and terminals made for damage and corrosion.

9. The boxes are provided with readily detachable lids and have been designed for ease of removal, being supported on quick-release mountings. When major servicing is necessary, it is recommended that the boxes are removed from the aircraft and replaced with fully serviced components, thus reducing the time in which the aircraft is unserviceable. The faulty boxes should then be serviced, on the bench, and returned to store to be held as spares. The method of removing the boxes is described in Group A.2.

Generator control and supply panels

10. These two panels are located together between frames 16 and 19 on the starboard side of the radio bay in the front fuselage. The supply panel is outboard of the generator control panel and is curved to conform with the inside contour of the fuselage skin, being attached by studs on frames 17 and 18, which engage with channel members on the panel. The panel carries a number of terminal blocks, fuse boxes and relays, together with plugs for the cable assemblies to and from the panel. The generator control panel is hinged to the top longeron and fits over the supply panel to form a lid, being attached to the latter panel by four Dzus fasteners along the lower edge. The panel contains all the generator control components, fuse boxes and testing equipment. When raised for access to the supply panel, the generator control panel may be retained in the up position by a hook attached to a length of chain secured to the radio mounting structure.

Leg panel

11. This panel is in the form of a box, being bolted to the cabin floor, below the centre instrument panel and just forward of the control column. It is provided with a hinged door on the port side and a sloping plate carrying the plugs for the cable assemblies on its forward face. The rear face carries the oil pressure gauge, generator power failure warning lamps, ignition and starter switches, together with the gyro gun sight circuit breaker and a number of control switches. The box contains relays, terminal blocks, a resistance unit and fuse blocks, these latter components being mounted on the inside face of the door for easy accessibility.

Cabin port shelves

12. The cabin port shelf extends between frames 8 and 12, and the two portions about to be described form removable parts of this structure. The forward portion is located just inboard of the throttle lever at the forward end of the structure, while the rear portion extends after from just behind the high pressure full cock to the end of the structure. Each portion is attached to the fixed structure by a number of screws and Dzus fasteners and is in the form of a panel with a side member. The rear portion is also provided with an end plate which carries the plugs for connection with the cable assemblies to and from this shelf. The panels carry the radio controllers, control switches, warning lamps and indicators, while below a hinged door, in the top surface of the rear portion, are a number of terminals and fuse blocks supplying the equipment.

Cabin starboard shelf

13. This shelf, of which the removable portion about to be described is the major part, extends between frames 8 and 12. The removable portion is attached to the fixed structure by a number of Dzus fasteners and is in the form of a panel with a side member and end plate. The end plate carries the

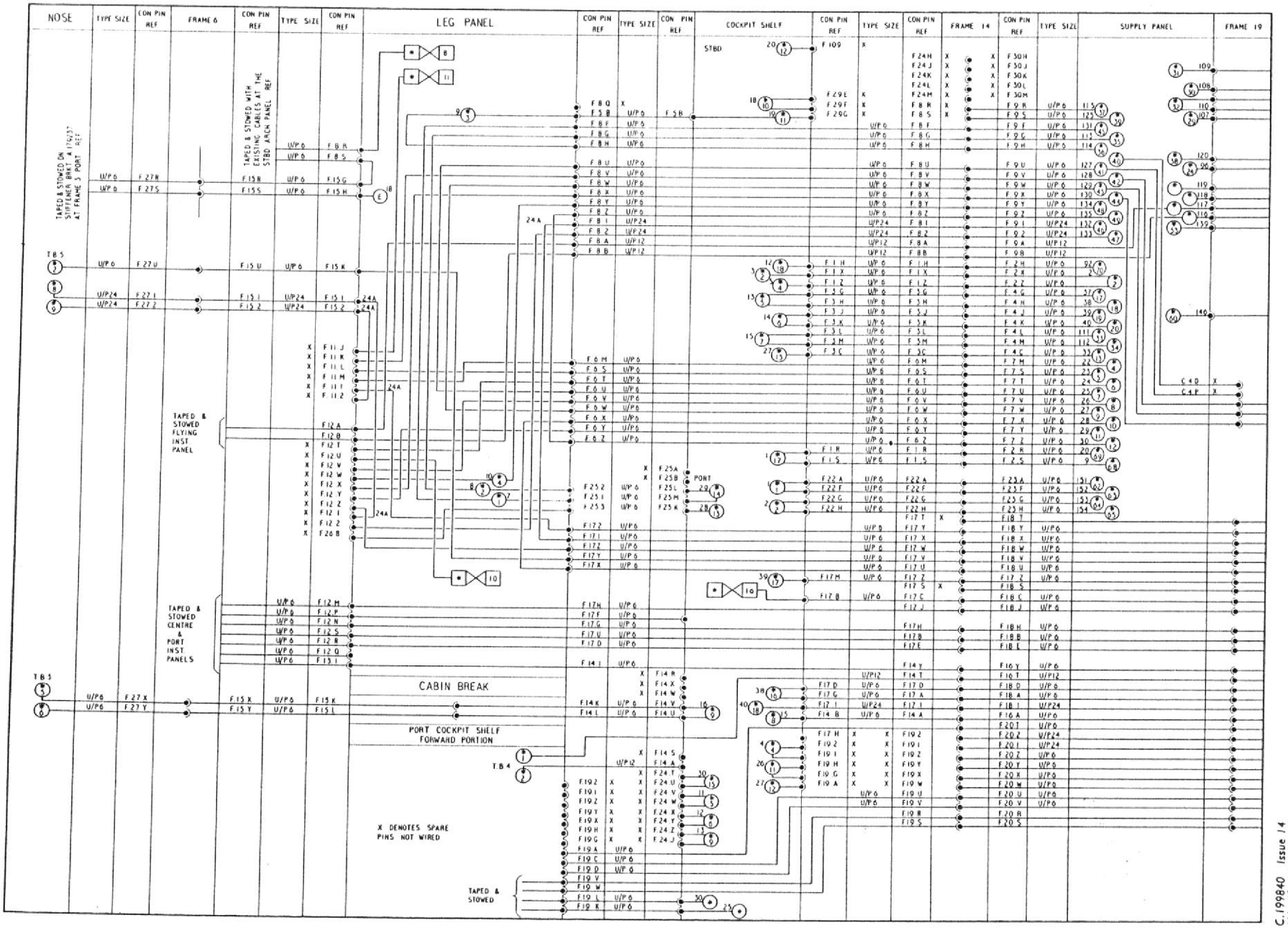

Fig. 2. Available spare wiring—sheet 1

2792/6

RESTRICTED

plugs for the cable assemblies to and from the shelf while the panel incorporates a number of switches and circuit breakers, together with the fuel contents gauges. Below a hinged door, at its rear end, are a number of fuse and terminal blocks supplying the equipment.

Gun-firing panel

14. This panel is bolted below the radio mounting structure on the port side of the front fuselage and carries the gun-firing equipment, consisting of a number of relays, terminal blocks and fuse blocks supplying the equipment.

Radio relay box

15. This box is mounted on the fuselage bottom longeron below the radio mounting structure just aft of frame 16 and contains the radio supply fuses and control relays, together with a number of plugs for the radio connectors to and from the box. For further details of this box, reference should be made to Sect. 6, Chap. 1.

Servicing of panels and shelves

16. The equipment panels and cabin shelves should be regularly examined to ensure that they are correctly supported, clean and undamaged. All the components should likewise be examined for security, and an examination of the wiring and terminals made for signs of damage and corrosion. The Dzus fasteners securing these panels and shelves should also be examined to ensure that they are correctly engaged and not damaged or distorted in any way, paying particular attention to the springs. Any fasteners found to be unlocked must be re-engaged and any found defective renewed as described in A.P.1464B, Vol. 1, Part 2, Sect. 6, Chap. 3.

17. When major servicing is necessary to these panels and shelves, it is recommended that they are removed from the aircraft and replaced with fully serviceable components, thus reducing the time in which the aircraft is unserviceable. The faulty panel or shelf should then be serviced, on the bench, and returned to store to be held as a spare. The method of removing these components is given in Group A.2.

Cable assemblies

18. These consist of a number of cables assembled together, most of which are fitted at each end with multi-pole plugs or sockets. The assemblies are referenced numerically, the number being prefixed with a letter denoting their location in the aircraft, or, with special circuits, the service which they supply. Front fuselage cable assemblies are prefixed by the letter F, centre fuselage assemblies by the letter C and rear fuselage assemblies with the letter R. Cable assemblies in the port wing are prefixed by the letter P, while those in the starboard wing carry the letter S. The artificial horizon, GM.4F compass and armament cable assemblies are prefixed with the letters AH, GC and A respectively. The cable assemblies in the engine bay hot zones consist of Nypren insulated cables.

19. A periodical examination of the cable assemblies should be made for signs of oil soakage and to ensure that they are properly supported and not chafing, cut or damaged in any way. Damaged cables must be renewed and all slack support clips retightened.

Cables

20. The ends of each cable are identified, in one of two ways, by means of rubber sleeves. At equipment the sleeve gives the item and terminal to which the cable core is connected, while at terminal blocks the sleeve gives the equipment and terminal from where the cable core originated. For the type of cable employed in the various circuits, reference should be made to the routing diagrams and Table 5 *(cable abbreviations)*. The method of servicing and repairing the cables and P.V.C. conduit is contained in A.P.4343, Sect. 12 and A.P.4343C, Vol. 1, Book 3, Sect. 5.

Multi-pole plugs and sockets

21. Plessey standard and pressure-proof plugs and sockets, together with the Mk. 4 miniature types, are used on the cable assemblies, junction boxes and panels, etc. These are fully described in A.P.4343C, Vol. 1, Book 3, Sect. 5, Chaps. 1 and 8, and consist of internal mouldings, holding the plug pins and socket inserts, which float in fully weather-proof metal housings. The plug pins and socket inserts are each identified by a letter or number on the internal moulding and are arranged in a pattern so as to prevent incorrect assembly with their associated component, thus preventing cross-connection or short-circuiting.

22. Those plugs and sockets fitted to cable assemblies outside junction boxes and panels, etc., are provided with rubber sleeves and bungs, which seal the cable entry to prevent the ingress of moisture. The sleeves and bungs are retained in position by inner and outer ferrules locked by a coupling nut. Each socket may be identified by the cable assemblies to which it is attached, the reference being printed on the rubber sleeve or P.V.C. conduit. Each plug is also identified by its associated cable assembly reference or colour which is painted on the junction box or panel to which the plug is attached. Where two or more identical plugs or sockets are situated together, they are coloured for easy identification.

23. Before an attempt is made to remove a Plessey standard or pressure-proof socket from its associated plug, the coupling nut, retaining the sleeve and bung or ferrule and P.V.C. assembly to the socket, must be slackened. This is necessary as the coupling

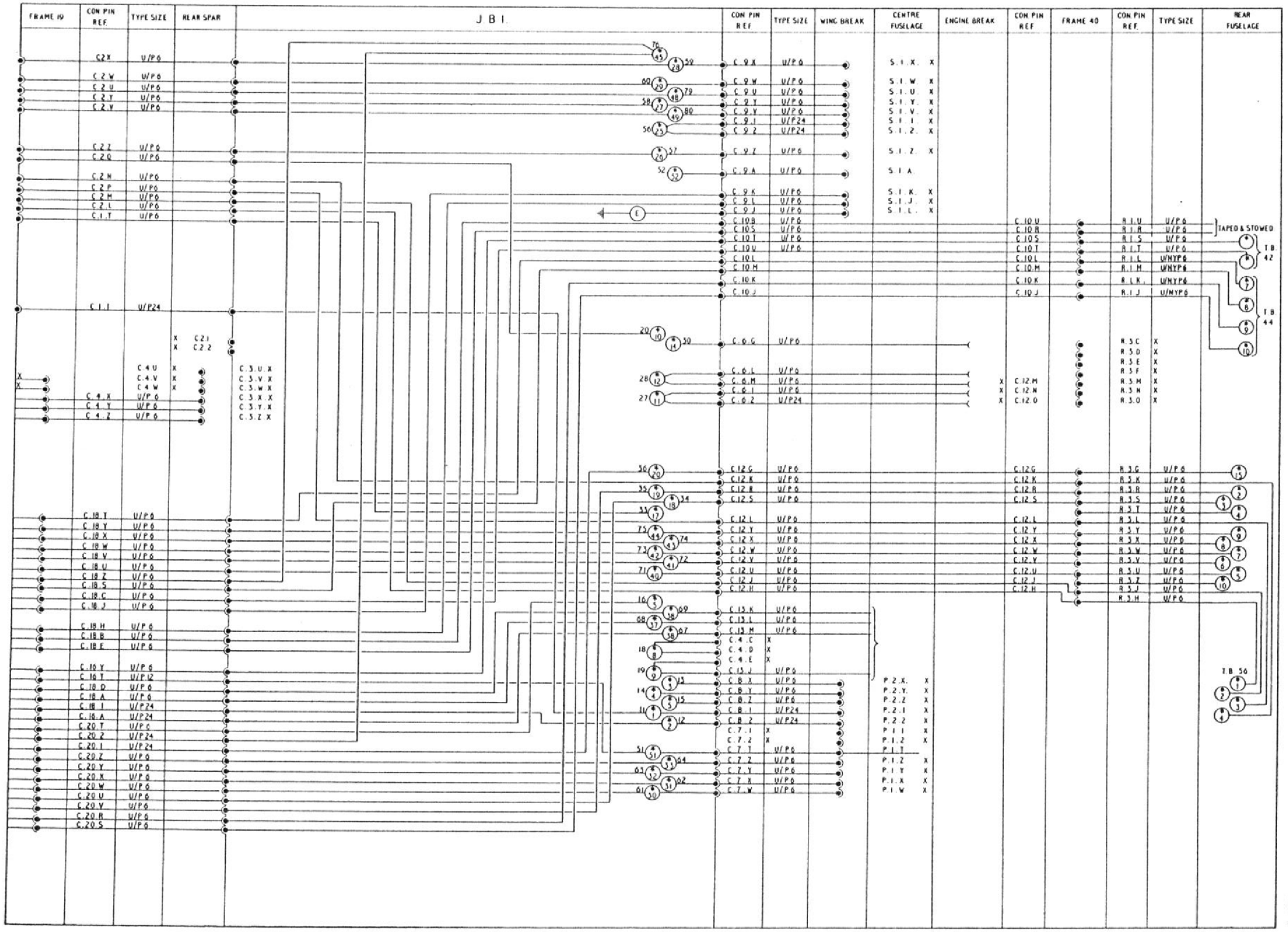

C.199840 Issue 14
(Modified for Mk. 52)

Fig. 3. Available spare wiring—sheet 2

RESTRICTED

nut also serves to lock the socket when it is mating with its plug. It should also be noted that this nut should be slackened before fitting the socket and the socket screwed in by hand, being assisted home by pushing on the back. *A spanner or undue force must not be used, or damage will result.*

24. The plugs and sockets should be examined periodically for signs of corrosion which, if found, must be removed without delay. When removing corrosion, care must be taken not to damage the plated surface of the plug pins or socket inserts or early re-corrosion will result. The importance of cleanliness and the need for regular lubrication of the plug and socket screw threads cannot be over-emphasized if seizing of these threads is to be avoided. Low temperature grease XG-275 *(Ref. 34B/100512)* is to be used and all excess wiped off. On no account should a lubricant with a graphite base be employed.

25. When it is required to examine or service the cable connections to plugs and sockets incorporating rubber sleeves and bungs, access may be gained by releasing the sleeve at the coupling nut and rolling it back until clear of the connections.

Fuses

26. The circuit fuses are contained in quick-release fuse blocks in the A.C. junction box and attached to the various panels and cabin shelves carrying the electrical equipment. They are referenced numerically, each panel and shelf having its own series of numbers. In most instances, these numbers, together with the fuse rating and the code letters of the circuit it serves, appear on the associated wiring diagram in the box concerned. In certain instances this information is given on a photographic label attached to the appropriate fuse block. The majority of the fuses are of the type S series, but a few Type H.R.C. fuses are also used and reference should be made to Table 1 for the ratings and fuse numbers. The fuses should be examined periodically to ensure that they are serviceable and of the correct value.

27. Dummy fuses are fitted in 'NOT IN USE' circuits to prevent inadvertent operation of the circuit. These fuses, in red plastic, are identifiable by feel by their square section centre and corrugated sides. One side is embossed NOT IN USE. Whenever a live fuse is removed while servicing it is to be temporarily replaced by a dummy fuse fitted with a 9 inch by 1 inch streamer. Dummy fuses are referenced:—

2 amp. size fuse dummy	5CZ/5865
2·5 amp. size fuse dummy 5 amp. size fuse dummy	5CZ/5866
10 amp. size fuse dummy	5CZ/5867
40 amp. size fuse dummy	5CZ/5868

TABLE 1

Fuses

Location	Fuse	Size (Amp.)	Service	Location	Fuse	Size (Amp.)	Service
Supply panel	1	2·5	Hydraulic pressure warning	Supply panel	12	5	Fuel contents; balancer relay
,,	2	10	Ignition *(port)*	,,	13	—	*Spare*
,,	3	20	I.F.F. Radio	,,	14	2·5	Tail plane position indicator
,,	4	10	Ignition *(stbd.)*	,,	15	2·5	Aileron trim indicator
,,	5	2·5	Service lamp, radio bay	,,	16	2·5	Rudder trim indicator
,,	6	2·5	Service lamp, starter bay	,,	17	—	*Spare*
,,	7	2·5	Flap position indicator	,,	18	—	*Spare*
,,	8	2·5	Pressure refuelling	,,	19	2·5	Wing tank fuel level switch *(port)*
,,	9	5	Fire warning	,,	20	2·5	Wing tank fuel level switch *(stbd.)*
,,	10	2·5	Fuel pressure relay *(port)*				
,,	11	2·5	Fuel pressure relay *(stbd.)*	,,	21	—	*Spare*

(Continued overleaf)

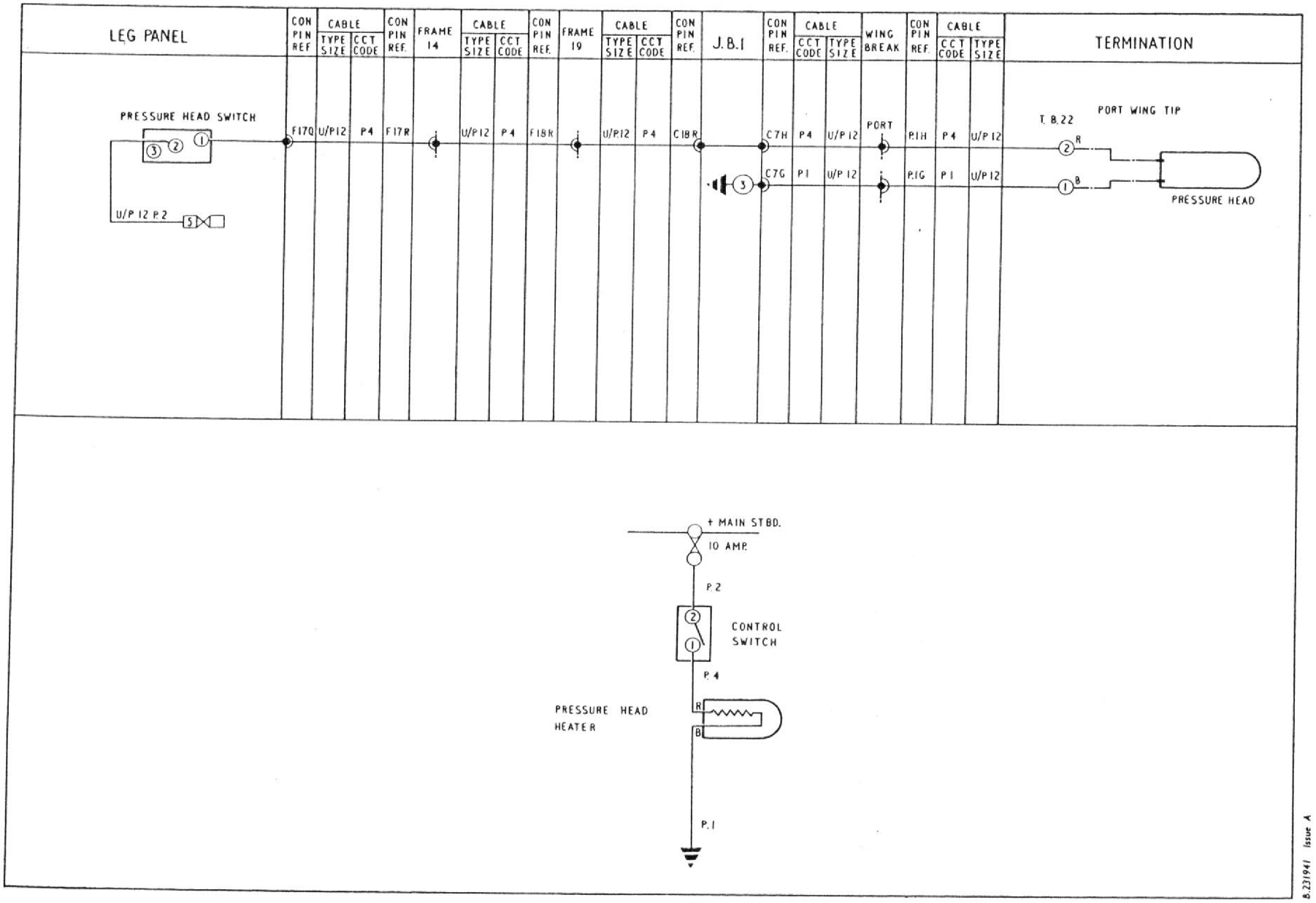

Fig. 4. Typical routing and theoretical diagram

TABLE 1

Fuses *(contd.)*

Location	Fuse	Size (Amp.)	Service
Supply panel	22	—	*Spare*
,,	23	—	*Spare*
,,	24	—	*Spare*
,,	25	10	Bomb jettison and fusing
,,	26	5	Bomb jettison
,,	27	10	Gun firing
,,	28	5	R.P. reset *(not used)*
,,	29	—	*Spare*
,,	30	—	*Spare*
,,	31	5	Fuel dipping
,,	32	5	Power elevator
,,	33	5	Fuel pressure indicator
,,	34	20	Fire extinguisher
,,	35	5	Fire extinguisher
,,	36	—	*Spare*
Cabin port shelf	1	5	Emergency fuel pump
,,	2	5	U/C. control and radar supply
,,	3	5	Gun sight
,,	4	—	*Spare*
,,	5	2·5	Tail plane control
,,	6	20	Tail plane control
,,	7	2·5	Tail plane control
,,	8	—	*Spare*
,,	9	5	Power aileron
,,	10	5	Hood control
,,	11	2·5	Aileron trim control
,,	12	2·5	Radar
,,	13	—	*Spare*
Cabin port shelf	14	—	*Spare*
,,	15	—	*Spare*
,,	16	—	*Spare*
,,	17	—	*Spare*
,,	18	2·5	U/C. indicator
,,	19	5	U/C. indicator
,,	20	5	Flap control
,,	21	5	Pressurization control
,,	22	5	Pressurization control
,,	23	5	Pressurization control
,,	24	5	Airbrake control
Cabin starboard shelf	1	5	Navigation lights
,,	2	—	*Spare*
,,	3	10	A.R.N. compass
,,	4	2·5	A.R.N. compass light
,,	5	2·5	Cabin lights *(panel U/V.)*
,,	6	2·5	Cabin lights *(panel red)*
,,	7	2·5	Cabin lights *(shelves)*
,,	8	5	Engine anti-icing
Generator control panel	1	5	Volts and amps. test sockets *(stbd.)*
,,	2	5	Ammeter test socket *(stbd.)*
,,	3	5	Ammeter test socket *(port)*.
,,	4	5	Volts and amps. test sockets *(port)*
,,	5	5	Power failure indicator and light *(stbd.)*
,,	6	5	Power failure indicator and light *(port)*

(Continued overleaf)

TABLE I

Fuses *(contd.)*

Location	Fuse	Size (Amp.)	Service
Generator control panel	7	—	*Spare*
,,	8	—	*Spare*
Leg panel	1	2·5	Servicing light *(nose)*
,,	2	5	Fire extinguisher
,,	3	2·5	Turn and slip indicator
,,	4	2·5	Turn and slip indicator
,,	5	10	Pressure head
,,	6	10	G.45.B camera
,,	7	—	*Spare*
,,	8	—	*Spare*
,,	9	—	*Spare*
,,	10	—	*Spare*
,,	11	—	*Spare*
,,	12	—	*Spare*
,,	13	5	Engine starter
,,	14	10	Engine starter
,,	15	—	*Spare*
,,	16	—	*Spare*
Arm J.B.2	1	2·5	Nose fuzing
,,	2	2·5	Tail fuzing
A.C. Distribution box	1	2·5	Starting control *(No. 1 inverter)*
,,	2	2·5	Compass D.C. bias
,,	3	10	Normal supply
,,	4	10	Standby supply
,,	5	2·5	Radar ranging: blue
,,	6	2·5	Radar ranging: red
A.C. Distribution box	7	5	Radar ranging: D.C. bias and indicator
,,	8	—	
,,	9	2·5	Oil pressure: blue
,,	10	2·5	Temp. amp and spare: blue
,,	11	2·5	Artificial horizon: blue
,,	12	2·5	Compass: blue
,,	13	2·5	Oil pressure: red
,,	14	2·5	Temp. amp and spare: red
,,	15	2·5	Artificial horizon: red
,,	16	2·5	Compass: red
Radio relay box	1	20	V.H.F. set No. 1
,,	2	20	V.H.F. set No. 2
,,	3	5	V.H.F. selection
,,	4	5	Press to talk
,,	5	5	Telebriefing
Gun firing panel	1	2	H.R.C. outer gun *(stbd.)*
,,	2	2	H.R.C. inner gun *(stbd.)*
,,	3	2	H.R.C. inner gun *(port)*
,,	4	2	H.R.C. outer gun *(port)*
,,	5	5	Gun ventilation
,,	6	5	Gun pack thermostat
,,	7	—	*Spare*
,,	8	—	*Spare*
Power controls J.B.	—	2·5	Elevator indicator
,,	—	2·5	Aileron indicator

Circuit breakers

28. All the circuit breakers, apart from those on and below the generator control panel in the radio bay, are accessible from the cabin. They are not referenced, but may be identified by the name of the circuit that they protect, this being given adjacent to each breaker. The interior of the circuit breakers is inaccessible and servicing is therefore restricted to the functional and insulation tests given in A.P.4343B, Vol. 1, Book 2, Sect. 10, Chap. 6. Table 2 lists the circuit breakers together with their ratings and References.

TABLE 2

Circuit breakers

Circuit	Rating (Amp.)	Ref.
Gun firing	5	*5CY/2559*
Gun sight mounting	10	*5CY/2560*
No. 1 generator, field	10	*5CY/2560*
No. 2 generator, field	10	*5CY/2560*
Bomb release	10	*5CY/2560*
Flight instrument control Normal	15	*5CY/2561*
Stand-by	15	*5CY/2561*
Hood control	25	*5CY/2562*
Tail plane control	25	*5CY/2562*
Tank Pumps Port	25	*5CY/2562*
Starboard	25	*5CY/2562*
Engine starting	45	*5CY/2564*
Radar ranging	45	*5CY/2564*
No. 1 generator, main	200	*5CY/2853*
No. 2 generator, main	200	*5CY/2853*

Relays

29. The relays are located in the junction boxes and on the various panels and shelves carrying the electrical equipment. They are referenced alphabetically, the letters being given adjacent to each unit and on the wiring diagrams. The relays should be inspected at regular intervals to ensure that the contacts are kept clean and that the units are undamaged and secure. They should also be

TABLE 3

Filament lamps

Lamp	Circuit	No. off	Voltage	Wattage	Ref.
Power failure warning	Generators and batteries	2	24	2·8	*5L/X 951230*
Engine pumps isolated	Emergency fuel pumps	1	24	2·8	*5L/X 951230*
Fuel pressure warning	Fuel pressure	1	24	2·8	*5L/X 951230*
Cabin pressure warning	Cabin press. and temp. control	1	24	2·8	*5L/X 951230*
Alighting gear indicator	Alighting gear indicator	9	24	2·8	*5L/X 951232*
Alighting gear warning	Alighting gear indicator	1	24	2·8	*5L/X 951230*
Ultra-violet lamps	Cabin lighting	2	12	7·5	*5L/X 952261*
Red lamps	Cabin lighting	8	24	2·8	*5L/X 951263*
Red stand-by lamps	Cabin lighting	2	2·5	0·3	*5L/X 951134*
Wing-tip navigation	Navigation lamps	2	28	24	*5L/X 952431*
Tail navigation	Navigation lamps	1	24	10	*5L/X 952276*
Service lamps	Service lamps	3	24	6	*5L/X 952254*
Gun sight	Gun sight	4	22	12	*5L/X 951260*
Hydraulic pressure	Hydraulic pressure indicator	1	24	2·8	*5L/X 951230*
V.H.F. control	V.H.F. radio	2	2·5	0·5	*5L/X 951122*
Tele-briefing	V.H.F. radio	1	24	2·8	*5L/X 951230*
Radar locked-on	Radar ranging and supply	1	24	2·8	*5L/X 951230*
Fire warning	Fire warning and extinguisher	1	24	2·8	*5L/X 951232*

subjected periodically to the functional tests given in A.P.4343C, Book 2, Vol. 1, Sect. 3.

Note . . .

Relays that are operating correctly are best left alone and it is, therefore, not recommended that the covers are removed or the contacts cleaned, unless absolutely necessary.

Switches

30. The switches employed in this aircraft are sealed units and cannot be readily dismantled for servicing, they should, however, be examined for cracks and signs of strain, paying particular attention to the switch dolly.

Terminal blocks

31. Apart from those inside junction boxes and on the panels carrying electrical equipment, terminal blocks are also used as distribution and breakdown points throughout the aircraft. These are of the Plessey quick release 2, 3, 5, 10 and 20-way type and are referenced numerically, the numbers being preceded by the letters T.B. Each terminal carries a coding plate on which is marked the terminal numbers, as given in the wiring diagrams. The terminal blocks may be located on the cable assembly layout and location diagrams contained in Group A.3.

Filament lamps

32. When renewing filament lamps, reference should be made to Table 3 to ensure that the correct type is used.

Earth points

33. Apart from the guns, engine starter, inverters, suppressors, the V.H.F. and I.F.F. radio sets, which are earthed internally or adjacent to their mountings, all the other earth leads are grouped, for ease of servicing and insulation resistance testing, and connected to the aircraft structure at a number of stud-type main earth points. All the main earth points are numbered and may be located on the cable assembly layout *(Group A.3)* and on the supply and earth routing chart *(fig. 1)* of this Group. When refitting earth leads, care must be taken to ensure that the surfaces in contact are perfectly clean and in particular, free from grease and paint. Completed assemblies should be protected against corrosion by applying one coat of blue oil-based paint *(D.T.D. Spec. 827)*.

Circuit coding and group references

34. Each circuit of this aircraft is coded by means of a letter or letters, which normally consist of the initials of the circuit *(e.g. the fire warning circuit is coded FW)*. It must be noted that these code letters are for reference only and will not be found on the cables in the aircraft. They are, however, shown at every terminal connection in the aircraft by means of a label or wiring diagram. The code letters will also be found on the theoretical and routing diagrams in the various groups of this chapter, because each section of a particular circuit is also referenced by a number preceded by the circuit code letters *(e.g. FW2, FW4, etc.)*. A list of the various circuits employed in this aircraft, together with their code letters and the Chapter and Group references of this Section is given in Table 4.

TABLE 4

Circuit codes and group references

Circuit	Code	Chapter	Group	Circuit	Code	Chapter	Group
A.C. supplies	CH	1	E.1	Cabin lighting	M	1	F.1
Aileron trim controls	A	1	D.1	Cabin pressurization and temperature control	CP	1	D.6
Aileron trim indicators	AD	1	D.1	Camera gun	CG	1	G.1
Aileron power controls	PA	1	D.2	Engine anti-icing	EA	1	C.4
Alighting gear control	UC	1	D.7	Engine starting	SA	1	C.1
Alighting gear indicator	U	1	D.8	Elevator power controls	PE	1	D.2
Air brake control	AB	1	D.11	Emergency fuel pump	EF	1	2
Artificial horizon	AH	2	3	Exhaust gas thermometer and top temperature control	ET	2	2
Bomb jettison	BJ	1	G.1				
Bomb release	BR	1	G.1				

(Continued overleaf)

TABLE 4

Circuit codes and group references (*contd.*)

Circuit	Code	Chapter	Group	Circuit	Code	Chapter	Group
Fire warning	FW	1	C.2	Navigation lamps	N	1	F.2
Fire extinguisher	FE	1	C.2	Oil pressure gauge	OP	2	2
Flap control	F	1	D.4	Pressure head heater	P	2	3
Flap position indicator	FD	1	D.4	Pressure refuelling	PR	1	C.3
Fuel content gauges	FG	2	2	Radar ranging	RS	1	H.1
Fuel transfer pressure warning	FP	2	2	Radio compass	RN	1	H.1
Generators and batteries	GA	1	B.1	Rudder trim indicators	RD	1	D.1
Gyro compass	GC	2	3	Service lamps	L	1	F.3
Gyro gun sight and camera recorder	GS	2	4	Tachometer	RA	2	2
Gun firing	GF	1	G.1	Tail plane control	T	1	D.3
Gun heating	GH	1	G.1	Tail plane position indicator	TD	1	D.3
Gun ventilation	GV	1	G.1	Tank pumps	BP	1	C.3
Hood control	HC	1	D.5	Tank pump failure warning	PF	1	C.3
Hydraulic pressure warning	HP	1	D.2	Turn and slip indicator	TS	2	3
I.F.F. radio	IF	1	H.1	V.H.F. radio	RT	1	H.1

GENERAL SERVICING OF SYSTEM

External supply socket

35. This is mounted on the battery support structure below the batteries; access is gained by opening the radio access panel. It is used to connect an external supply to the aircraft services by means of a standard plug and it is most important that, when servicing, the external supply is used to prevent the aircraft batteries from being discharged. When the external supply is in use, the generators are automatically isolated to prevent a reverse feed *(Group B.1)* and it is recommended that the battery master switch, located on the leg panel, is placed in the OFF position to prevent discharge of the aircraft batteries should the external supply voltage fall below that of the batteries.

Rendering aircraft electrically safe

36. When not required for flight, and during any servicing operations not requiring the electrical supply, the aircraft must be rendered electrically safe to eliminate the possibility of a short-circuit resulting in the accidental operation of the guns, hydraulic units, etc., with consequent damage to the aircraft or injury to personnel. When electrical power is required, during servicing, an external supply should be used. To render safe, it is recommended that the leads from the batteries be disconnected, as operation of the battery master switch will not render the system completely safe. Also ensure that the external supply is disconnected.

Use of spare cables for emergency servicing

37. Figs. 2 and 3 show the spare cables available in the cable assemblies. These are provided for future modifications and additions to the existing installations, but may also be used, in an emergency, to replace a defective cable. Under this condition, having found the defective portion of cable, refer to figs. 2 and 3 to find a similar cable which can be used. At suitable points, modify the existing cable run to use the spare cable and isolate the defective cable. Amend the junction box, panel and shelf wiring diagrams to agree and note the fact of this change in the aircraft log book, with the instruction that the cable assembly containing the defective cable must be changed or repaired at the next available opportunity.

Note . . .

This procedure is only to be adopted as a temporary measure to keep the aircraft operational and must not be allowed to carry on indefinitely.

Insulation resistance testing

38. As an interim measure, pending the introduction of a full insulation resistance test, the following procedure, which only covers the minimum requirements, should be carried out.

(i) Disconnect the main batteries and stow the connectors clear of the aircraft structure.

(ii) Remove all lamps.

(iii) Disconnect the inverters.

(iv) Disconnect earth points (1 to 20).

(v) Remove the white compass plug from the A.C. junction box.

(vi) Remove the red and green radar plugs from the A.C. junction box.

(vii) Remove the plug from the fire extinguisher.

(viii) Remove the supply plug to both fuel contents gauge amplifiers.

(ix) Disconnect the gun sight suppressor F5.

(x) Bridge all other suppressors.

(xi) Remove the voltmeter, if this has been fitted.

(xii) Remove the lamps from the Type A cut-outs.

(xiii) Remove the engine plugs.

(xiv) Disconnect all radio equipment.

(xv) Place all switches to the ON position.

(xvi) Connect a 250-volt insulation resistance tester to the main battery positive lead and to an earth point of the aircraft.

Note . . .

It is not necessary to disconnect the suppressors if an insulation resistance tester, Type C (Ref. 5G/152) is used.

INTERPRETATION OF DIAGRAMS

General

39. The wiring of all the circuits in this aircraft is shown by means of routing and theoretical diagrams. The routing diagrams show the complete wiring for each individual circuit and the physical relationship between the electrical components. The diagrams are divided into a number of columns which bear the names of the junction box and equipment panels through which the wiring passes and also the circuit code, connector pin references, and cable type, together with all break points and terminations. A plug and socket connection is shown by a small semi-circle embracing a black dot; the semi-circle denotes the socket insert and the black dot the plug pin. Terminals in the junction boxes and on equipment panels are represented by small circles with their reference numbers enclosed. Fuses are numbered and, in most instances, are shown in the equipment panel columns. These numbers refer only to the terminals and fuses in the box or on the panel concerned, each unit having its own series of numbers, as shown on the diagrams. The external connections to the equipment are shown in their correct relationship, but the internal wiring is not shown as this is given in the theoretical diagrams.

40. In the theoretical diagrams, the equipment is shown by symbols complete with internal wiring. Each symbol is annotated and designed to make the operation of the circuit readily understandable; brief explanatory notes are also given where necessary. As the diagrams are drawn for ease of reading, the symbols are not given in their correct physical relationship, but are positioned to give a straight-forward presentation, the connections being arranged to assist in this direction. The fuse rating is given adjacent to each fuse and each section of the circuit is referenced at suitable points with the circuit code. It must be noted that these circuit codes are for reference only and will not be found on the cables in the aircraft, but are shown in every terminal connection through which the wire may pass, by means of a label or wiring diagram. It will assist when reading theoretical and routing diagrams to refer to the cable assembly layout *(Group A.3)* and to note that all positive cables are given an even reference number, while all negative cables bear an odd number.

41. Unless indicated otherwise, all the routing and theoretical diagrams are drawn with the circuits in the condition found when the aircraft is at rest on the ground with its alighting gear down, the throttle closed, the engine stopped and electrical power off.

Method of reading a theoretical diagram

42. Reading theoretical diagrams is a straight-forward matter if a start is made at the fuse or circuit breaker, given at the top of each circuit, and the diagram followed through to the earth point at the bottom. As an example, consider the pressure head heater circuit illustrated in fig. 4. From the 10-amp. fuse, the positive supply, referenced P.2 is taken to the control switch, which is a single-pole switch marked OFF and ON. From the switch, the positive supply cable, referenced P.4, passes to the heater element in the pressure head. The negative return from the heater, which is referenced P.1. is connected to earth.

43. From the above example and a study of the diagram, it will be seen that, when the switch is closed, the heater element will be supplied with current and will thus heat the pressure head.

Method of reading a routing chart

44. Routing charts are divided into a number of columns, and all circuits commence from the fuse or circuit breaker shown in one of the shelf, panel, or termination columns. As an example of how to read a routing chart, consider the pressure head heater circuit illustrated in fig. 4.

45. From fuse number 5, on the leg panel, the positive supply is conducted by a unipren 12 cable, referenced P.2, to terminal 2 of the

pressure head switch, which is also mounted on this panel. From terminal 1 of the switch, a further unipren 12 cable, referenced P.4, connects with pin Q of plug F17, which is mounted on the leg panel. Cable assembly F17 mates with this plug and a further unipren 12 cable, also referenced P.4 and connected to pin Q of the socket, continues the supply to pin R of a plug and socket break at frame 14.

46. After this break, the cable assembly number changes to F18 and the unipren 12 cable, still referenced P.4, is connected to pin R and continues to another plug and socket break at frame 19. At this point, the cable assembly number changes to C18 and the unipren 12 cable, still referenced P.4 continues to pin R of plug C18 attached to J.B.1. The cable passes through the junction box and leaves it, still referenced P.4, via pin H of plug C7, which is also attached to the box. Cable assembly C7 mates with this plug and runs to the port wing plug and socket break.

47. After this break, the cable assembly number changes to P.1 and the unipren 12 cable, still referenced P.4, is connected to pin H of the socket on this cable assembly and continues to terminal 2 of T.B.22 in the port wing-tip. From this terminal the red core of the pressure head heater cable continues the supply to the heater element.

48. The negative return from the heater is the blue core. It is connected to terminal 1 of T.B.22 and a unipren 12 cable, referenced P.1, from the terminal block enters cable assembly P.1 and is connected to pin G of the plug and socket break in the port wing. After this break, the cable assembly number changes to C7 and the cable, still referenced P.1, is connected to pin G of the plug on this cable assembly and runs to J.B.1, where it is connected to pin G of plug C7 attached to the junction box. From the plug a further length of unipren 12 cable connects with earth terminal 3 in J.B.1.

Cable abbreviations

49. Table 5 should be used in conjunction with the cable type and size column on the routing charts to define the type of cable employed in the various circuits of this aircraft.

Junction box, panel, and shelf wiring diagrams

50. To facilitate servicing, each junction box, equipment panel, and shelf of this aircraft contains a diagram of its electrical wiring. These diagrams give the cable size, terminal numbers and plug references, together with the fuse numbers, ratings and services that they serve. A record of the modification state of the box or panel is also included in this diagram.

TABLE 5

Cable abbreviations

Abbreviation	Definition
U/P	Unipren
D/P	Dupren
T/P	Tripen
D/P SHEATH	Duprensheath
T/P SHEATH	Tripensheath
Q/P SHEATH	Quinprensheath
U/PM	Uniprenmet
D/PM	Duprenmet
T/PM	Tripenmet
U/NYP	Uninypren
U/FIRE	Unifire
D/CS	Ducralsil
D/CV	Ducralvin
Miniature cables	2C(etc)

This file was downloaded
from the RTFM Library.

Link: www.scottbouch.com/rtfm

Please see site for usage terms,
and more aircraft documents.