GROUP C.2 FIRE WARNING AND EXTINGUISHER

(CODE FW AND FE)

LIST OF CONTENTS

	Para.
Equipment employed	1
Description	
Fire warning and extinguisher	2
Operation	3
Servicing	
General	5
Testing fire warning lamp	6
Testing fire extinguisher	7
Testing flame switches	8
Re-setting inertia switches	9
Removal and assembly	
General	10

LIST OF ILLUSTRATIONS

	Fig.
Fire warning and extinguisher (routing and theoretical)	1

Equipment employed

1. The major components employed in the fire warning and extinguisher circuit are listed below, together with the relevant Air Publications to which reference should be made for a detailed description and the necessary servicing required to maintain the equipment in an efficient condition:—

Fire warning lamp and extinguisher switch *(Ref. No. 5CW/6311)* ... ... Pushbutton switch, Type C.5162 and Mk. 3 ... ... Flame switches, Mk. 4, HS/RS300	*A.P.4343C, Vol. 1, Book 1, Sect. 1*
Fire extinguisher bottle, Mk. 13A or 5AX ... ... Fire extinguisher cartridge, Type A716	*A.P.957C, Vol. 1, Sect. 3*
Inertia switches, Mk. 1, S.3 ... ... Relay, Type S, No. 1	*A.P.4343C, Vol. 1, Book 2, Sect. 3*

DESCRIPTION

Fire warning and extinguisher

2. A warning lamp, giving warning of fire in the engine bay, is contained in a combined fire warning lamp and extinguisher switch, situated on the starboard arch panel in the cabin. The lamp is controlled by a number of automatic re-setting flame switches, which are situated around the engine bay between the rear spar frame and rear transport joint and at frame 45. The warning lamp may be tested by pulling out the extinguisher switch button. The fire extinguisher is carried in a cradle mounted on the aft face of the main spar in the centre fuselage and feeds the engine spray units, via the inlet connection on the engine. The extinguisher is discharged manually by depression of the button of the combined fire warning and extinguisher switch, or automatically, in the event of a crash landing, etc., by operation of relay X, situated on the supply panel. This relay is energized by two inertia switches mounted one underneath the battery platform in the radio bay and the other on frame 12 in the gun bay. At the same time, this relay isolates

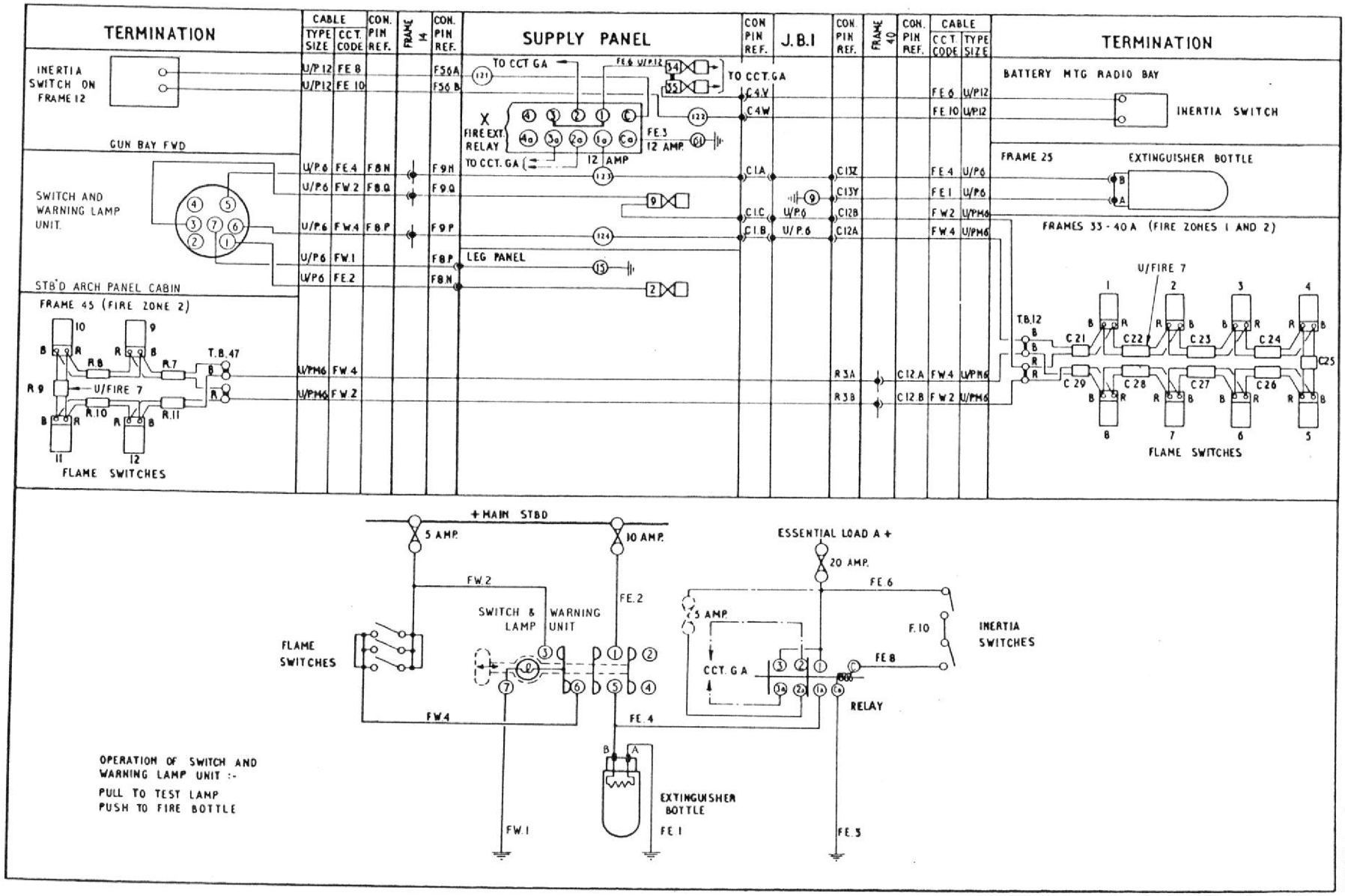

Fig. 1. Fire warning and extinguisher (routing and theoretical)

RESTRICTED

the batteries from all but the essential load line and also open-circuits the generator fields *(Group B.1)*. For a full description of the fire protection system as a whole, reference should be made to Sect. 4, Chap. 5.

Operation

3. The flame switches are all connected in parallel; thus, operation of any one switch will complete the circuit from the fuse to the warning lamp, via the contacts of the combined fire warning lamp and extinguisher switch unit, thereby lighting the lamp. The flame switch contacts close at 300 deg. $^{+30}_{-0}$ deg. C. The lamp may light intermittently on the ground, or in the air, due to heat surges in the engine bay. It must be noted that the flame switches do not discharge the fire extinguisher, which, if the lamp remains alight steadily for a period of 5 to 10 seconds, must be manually discharged by depression of the extinguisher push-switch. When depressed, the push-switch completes the circuit to the fuse in the extinguisher discharge head. To test the warning lamp filament the extinguisher push-switch must be PULLED, the lamp should light to indicate that its filament is unbroken.

4. In the event of a crash landing, etc., the inertia switches, which are connected in series, will operate and complete the circuit from the essential load line to energize relay X. When relay X is energized, contacts within this relay complete the circuit from the essential load line to the fuse in the extinguisher discharge head and feed the generator crash relays. The extinguisher is thus discharged and the generator crash relays energized to open-circuit the generator fields *(Group B.1)*. A pair of contacts, in relay X, which feed the battery master switch and battery relay, are broken when relay X is energized; the battery relay is thus de-energized and isolates the batteries from all but the essential load line.

SERVICING

General

5. For general servicing of the electrical system as a whole, reference should be made to Group A.1. All the components should be kept clean and inspected periodically for signs of damage and to ensure that they are securely mounted. Apart from the servicing described in paras. 6 to 10, together with the standard bench testing of the components, as described in the relevant Air Publications *(listed in para. 1)*, no further servicing should be necessary.

WARNING

As operation of the battery master switch will not isolate the fire extinguisher circuit, the system must be rendered safe, by removing the circuit fuses, before commencing any servicing operations found necessary after carrying out the following tests.

Testing fire warning lamp

6. The fire warning lamp, contained in the combined fire warning and extinguisher switch unit, should be tested for correct operation, before each flight, by pulling the fire extinguisher push-switch. The lamp should light to indicate that the bulb is serviceable.

Testing fire extinguisher

7. To test the continuity of the fuse in the fire extinguisher discharge head, disconnect the electrical socket from the plug on the discharge head and remove the discharge head from the extinguisher. Connect a suitable safety ohmmeter to the discharge head plug and if the reading obtained does not lie between 7 and 11 ohms, replace the unit with a fully serviceable component. *(It must be noted that the actuating fuses are very sensitive and the electrical checks must be made with care.)* The safe test current is 8 to 12 mA. As an additional safeguard, it is recommended that the discharge head is mounted on a suitable fixture with the charge end shielded, but unrestricted in case of accidental firing. To measure the insulation resistance, take a reading between each plug pin and the discharge head body. The reading obtained should be at least 20 megohms.

Testing flame switches

8. The re-setting flame switches, which operate the fire warning lamp, may be tested *in situ*, by using a 24 volt, 6 amp. battery-operated Type 1 tong tester. After allowing 6 minutes for the tester to warm up, it should be fitted over the barrel of each switch, in turn, when the warning lamp should light to indicate satisfactory operation. The temperature setting adjuster is locked and sealed during manufacture and in no circumstances must any attempt be made to interfere with its setting. An inspection should, however, be made to ensure that the expansion barrel of each flame switch is not damaged.

Re-setting inertia switches

9. To re-set each inertia switch, proceed as follows:—

(i) Disconnect the battery *(ensure an external supply is NOT connected to the aircraft)*.

(ii) Gain access to the switch *(Group A.3)* and remove the terminal cover.

(iii) Re-set the switch, by depressing the re-setting plunger situated between the terminals of the switch.

(iv) Replace the terminal cover and any doors removed to gain access.

REMOVAL AND ASSEMBLY

General

10. Once access has been obtained, the removal and assembly of the electrical equipment forming the fire warning and extinguisher circuit should present no difficulties. The location of, and access to, all the components is indicated in Group A.3, while the removal of the fire extinguishers is fully described in Sect. 4, Chap. 5.

This file was downloaded
from the RTFM Library.
Link: www.scottbouch.com/rtfm
Please see site for usage terms,
and more aircraft documents.