GROUP C.3 TANK PUMPS AND PRESSURE REFUELLING

(CODE BP AND PR)

LIST OF CONTENTS

	Para.
Equipment employed	1
Description	
Tank pumps	2
Operation	3
Pressure refuelling	10
Operation	11
Servicing	
General	14
Tank pump test	15
Removal and Assembly	
General	16

LIST OF ILLUSTRATIONS

	Fig.
Tank pumps (routing and theoretical)	1
Pressure refuelling (routing and theoretical)	2

Equipment employed

1. The major components employed in the tank pumps and pressure refuelling circuits are listed below, together with the relevant Air Publications to which reference should be made for a detailed description and the necessary servicing required to maintain the equipment in an efficient condition:—

Tank pumps	
Fuel pumps, Type SPE.1003, Mk. 1 *(tank)*	*A.P.4343D, Vol. 1, Book 2, Sect. 7*
Tumbler switch, S.P/ON-OFF, Type XD.443/1 *(tank pumps)*	*A.P.4343C, Vol. 1, Book 1, Sect. 1*
Circuit breaker 25A, Type A.4 *(tank pumps)*	*A.P.4343B, Vol. 1, Book 2, Sect. 10*
Tumbler switch, D.P/C.O. *(tank pump test)*	*A.P.4343C, Vol. 1, Book 1, Sect. 1*
Plug, ammeter, Type F *(tank pump test)*	—
Socket, ammeter, Type F *(tank pump test)*	—
Suppressor, Type O.2 *(tank pumps)*	*A.P.4343C, Vol. 1, Book 3, Sect. 5*
Balancer relay, Smith's MA4	—
Pressure refuelling	
Refuelling valve, Mk. 12, Series 3	*A.P.4343E, Vol. 1, Sect. 1*
Fluid level switches, Flight Refuelling, Type D.3504100/1 and /2 *(wing tanks)*	*A.P.1275A, Vol. 1, Sect. 24D*
Fluid level switches, Flight Refuelling, Type D.3504100/47 *(front tanks)*	*A.P.1275A, Vol. 1, Sect. 24D*
Time switch, Venner, Type PTA/HA/W.19055	*A.P.4343C, Vol. 1, Book 2, Sect. 3*

DESCRIPTION

Tank Pumps

2. The electrically driven fuel booster pumps incorporated in the inverted flight traps of the port and starboard front fuel tanks are supplied with current via the engine master switch *(Group C.1)*. The pumps are controlled by two changeover, centre-off switches PORT, MANUAL/AUTO and STBD, MANUAL/AUTO and located on the cabin starboard shelf. Each pump is protected by a 25-amp. circuit breaker situated at the rear end of the cabin starboard shelf. To minimize radio interference, the supply to each pump is taken through a suppressor mounted on the port side of the keel member between frames 20 and 21. Provision is made for testing each pump, in turn, by means of a three-position test switch marked TANK PUMPS TEST and mounted with an ammeter test socket on the rear end of the cabin starboard shelf.

3. Manual control of each pump is achieved by setting the related MANUAL/AUTO switch to MANUAL. Setting both of these switches to AUTO initiates automatic fuel tanks contents

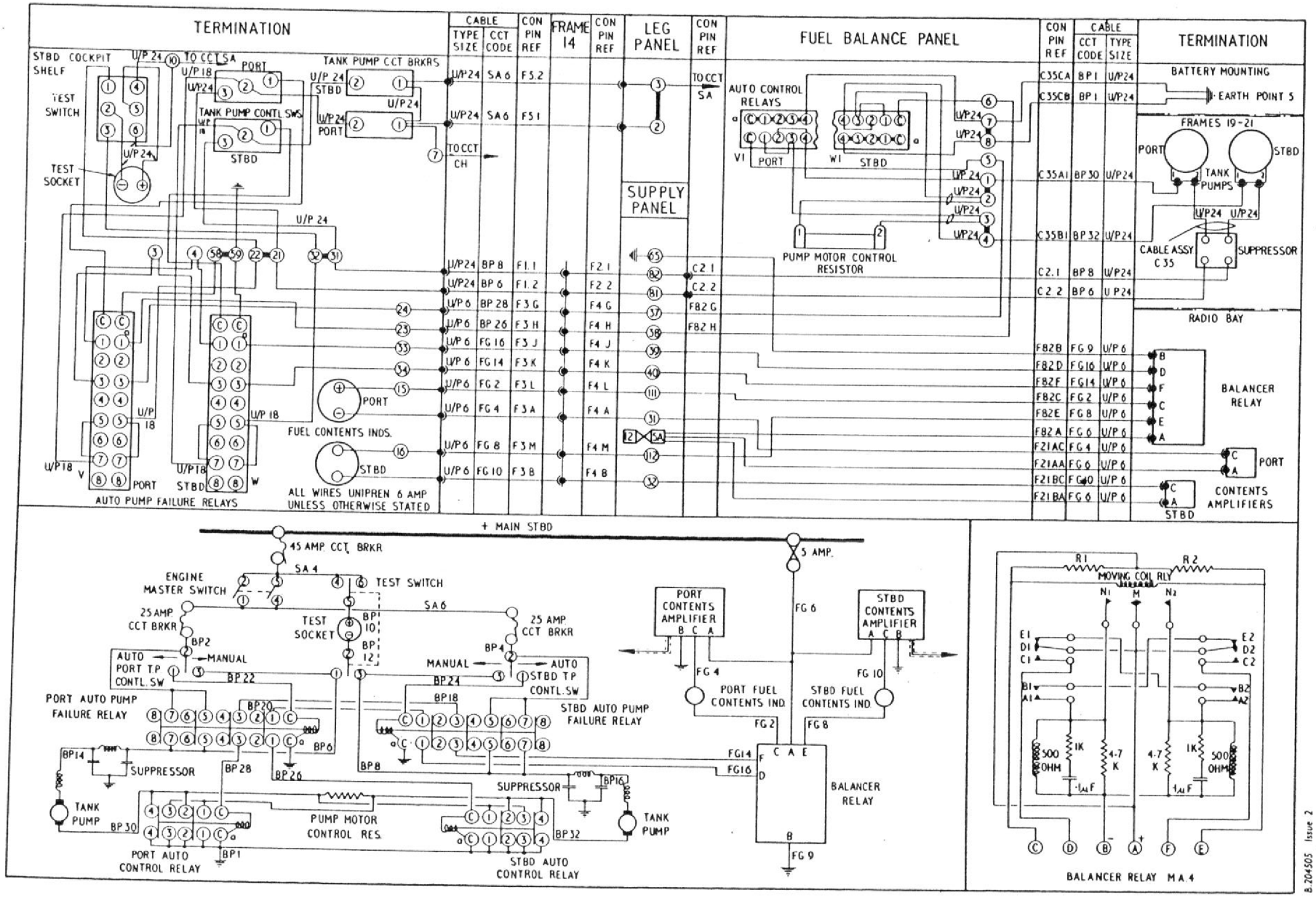

Fig. 1. Tank pumps (routing and theoretical)

2798/2

RESTRICTED

balance control. This automatic circuit includes auto pump failure relays located on the cabin starboard shelf, a fuel balancer relay located in the radio bay and auto control relays at the fuel balance panel mounted between frames 17A and 17B.

Operation

4. With the engine master switch ON and both MANUAL/AUTO switches set to MANUAL, both tank pumps will supply fuel to the engine driven fuel pump. As the tank pumps are matched units, they should draw fuel from the front tanks at equal rates and thus allow the transfer of fuel from the other tanks to proceed at equal rates in port and starboard systems. Both sides should empty simultaneously.

5. To assist in maintaining the contents balance between port and starboard systems, the auto fuel balance circuit is employed. With the engine master switch ON and both MANUAL/AUTO switches set to AUTO, the auto pump failure relays are energized. The pump supplies are then routed via the contacts 5 and 7 of the related pump failure relay. In addition, a circuit condition is set up in which the outputs of the fuel balancer relay are routed via the pump failure relays to the energizing coils of the auto control relays. In this arrangement, the contacts 3 and 1 of the pump relays form series circuits and both pump failure relays must be energized if auto balance is required. That is to say, both MANUAL/AUTO switches must be set to AUTO; if one of these switches is set to MANUAL, the related pump failure relay will be de-energized and both auto control relays will be isolated from the fuel balancer relay. The pumps will then operate as if both control switches were set to MANUAL. With both switches set to auto either pump may be switched to reduced-speed operation by a signal from the fuel balancer relay.

6. The fuel balancer relay is operated from the fuel contents gauging circuit. These circuits are supplied via a network in the fuel balancer relay consisting of a pair of resistors R1 and R2 in series with each other and in parallel with a sensitive two-way-energizing relay coil *(as shown in the inset of Fig. 1)*. An inequality of contents between the port and starboard fuel tanks will cause an inequality in the currents drawn by the gauging systems and therefore, an inequality in the volts drops across the resistors R1 and R2. The ends of the sensitive relay coil will be at different potentials and a current will flow to energize the relay. Supposing that, for any reason, an out of balance condition occurs and that the contents of, say, the starboard tanks becomes less than the contents of the port tanks, the current in the port circuit will be greater and, in the balancer relay, contact M will move to contact N1 energizing in turn the relay *(shown to the left in the inset diagram of fig. 1)*. When this relay is energized, contact D1 moves to contact C1 and a supply is connected via pin D of the balancer relay and contacts 1 of both pump failure relays to energize the starboard auto control relay. When this relay changes over, the pump motor control resistor is connected in series with the starboard tank pump. This pump will then run at reduced speed until fuel balance is re-established. Fuel unbalance in the opposite sense, with the contents of the port tanks less than that of the starboard tanks, will similarly energize the port auto control relay to slow the delivery from the port pump.

7. Fuel balance may, in emergency, be achieved more rapidly by switching off the pump of the tanks with the lesser contents and setting the other pumps switch to MANUAL. If this procedure is adopted, both switches must be set to AUTO or MANUAL when fuel balance is reached.

8. Should either pump be overloaded, due, for example, to a fuel surge, the appropriate circuit breaker will operate and isolate the pump from the circuit. When this occurs, the circuit breaker of the overload pump must be re-set. Then, if the fault was temporary, the pump will re-commence running in the normal manner. If the circuit breaker refuses to hold on, this indicates that the fault is of a permanent nature and, if sufficient fuel is not available in the serviceable side of the system to complete the flight, engine speed must be reduced and the sound pump switched OFF by means of its control switch. Under this condition, the fuel will be supplied to the engine equally from both sides of the system under gravity and transfer air pressure. The sound pump should, however, be switched on again for landing.

9. The two-position test switch and ammeter socket, used to test the tank pumps for correct functioning *(described in para. 15)*, are coupled to the engine starter circuit breaker *(Group C.1)* and obtain their positive supply from this source. The test switch feeds each pump, in turn, irrespective of the position of the control switches provided that the engine master switch is OFF. For the full description of the fuel system as a whole, reference should be made to Sect. 4, Chap. 2.

Pressure refuelling

10. The aircraft is refuelled under pressure through a standard 1½ in. coupling situated in the port wheel bay, the operation being controlled by a pre-set time switch mounted in the port stub wing adjacent to the refuelling coupling. The time switch energizes four solenoid-operated refuelling valves, located in the port and starboard front, and centre fuel tanks. These valves are controlled by fluid level switches located one in each front, and wing tank, and one in each drop tank *(when fitted)*.

Operation

11. To understand the function of the pressure refuelling circuit it is necessary to trace the sequence of operations which take place whenever the aircraft is refuelled. It should be noted that the battery master switch must be set to the ON position, or an external supply connected, before refuelling can commence, as an electrical supply is required to energize the refuelling valves.

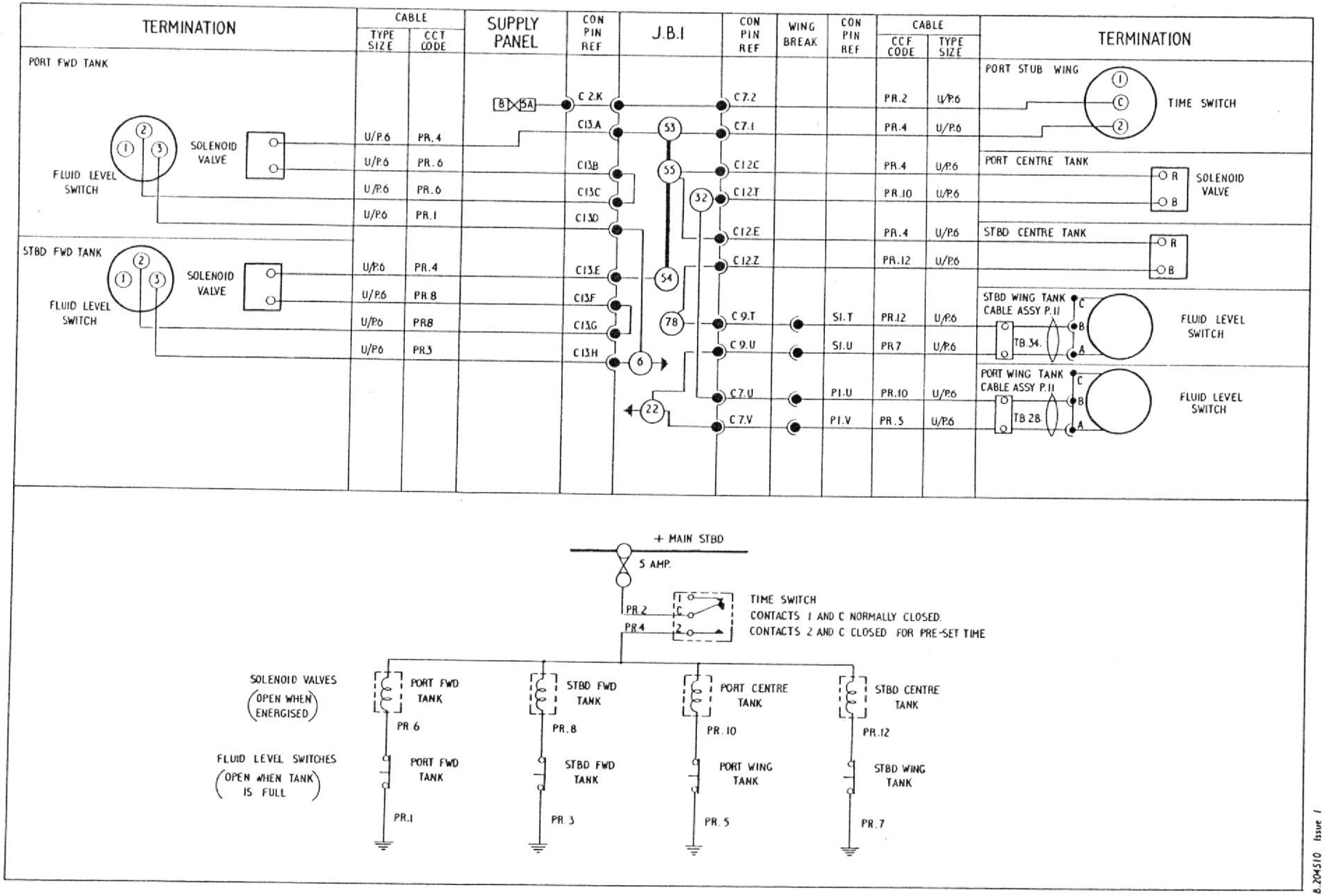

Fig. 2. Pressure refuelling (routing and theoretical)

2798/4

12. At the commencement of the refuelling operation, the bowser hose is connected to the refuelling coupling and the pump started with its controls set to REFUEL. The time switch is then set and makes contacts C and 2, thus completing the circuit to all four refuelling valve solenoids. The refuelling valves open when the solenoids are energized to allow fuel from the bowser to pass into the front and centre tanks and as each tank becomes full, its fluid level switch opens and de-energizes the solenoid of the refuelling valve, which closes to cut off the fuel supply to that tank. When drop tanks are fitted, however, the solenoids of the refuelling valves in the centre tanks will not be de-energized until the drop tanks are full.

13. Refuelling is complete when all the refuelling valves have closed. The time switch is then switched off, if it has not already completed its full travel, but if not switched off, after refuelling, it will automatically switch itself off after approximately 8 minutes. The time switch ensures that the refuelling circuit is disconnected from the positive supply at all times, apart from actual refuelling operations. This ensures that the refuelling valve solenoids do not become energized again, when the fluid level switches close as the fuel is consumed, as this would cause cross-transfer between the tanks, via the refuelling pipe lines. For a full description of the fuel and refuelling system, reference should be made to Sect. 4, Chap. 2.

SERVICING

General

14. For general servicing of the electrical system as a whole, reference should be made to Group A.1. The contacts of the pressure refuelling time switch should be kept clean and inspected for signs of pitting, which if found must be removed in the approved manner. These operations should only be carried out by competent personnel, as the switch contains a delicate clockwork mechanism. Apart from checking the filament lamps in the refuelling indicator for serviceability, keeping all the components clean and carrying out the normal routine tests of security and serviceability, as described in the relevant Air Publications *(listed in para. 1)*, the only other servicing required is the tank pump test *(described in para. 15)*.

Tank pump test

15. To test the pumps for correct functioning, connect an ammeter to the test socket located on the cabin starboard shelf. Ensure that the battery master switch is in the ON position, or that an external supply is connected, and check that the engine starter circuit breaker is CLOSED. Trip each pump circuit breaker or ensure that the engine master switch is OFF and select each pump in turn by operating the test switch located adjacent to the ammeter test socket. If the pumps are operating satisfactorily, the ammeter should show a reading of 11·75 amp. or less at 24 volts, but if the reading is above this value the cause must be investigated and rectified before the next flight. After test, re-set the circuit breakers, if tripped during test.

REMOVAL AND ASSEMBLY

General

16. The removal of the tank pumps, refuelling valves and fluid level switches is fully described and illustrated in Sect. 4, Chap. 2. Once access has been obtained, the removal of the remaining components forming the tank pumps and pressure refuelling circuits, should present no difficulties. The removal of the cabin starboard shelf, which carries the control switches and circuit breakers of the tank pumps circuit is fully described in Group A.2, while the location and access to all components is indicated in Group A.3.

This file was downloaded
from the RTFM Library.

Link: www.scottbouch.com/rtfm

Please see site for usage terms,
and more aircraft documents.