GROUP D.3 TAIL PLANE CONTROL AND POSITION INDICATOR

(CODE T AND TD)

LIST OF CONTENTS

	Para.
Equipment employed	1
Description	
Tail plane control	
Main control	2
Standby control	3
Operation	
Main control	5
Standby control	9
Tail plane position indicator	
General	10
Operation	11
Servicing	
General	12
Tail plane actuator	13
Tail plane position indicator	15
Removal and assembly	
General	16

LIST OF ILLUSTRATIONS

	Fig.
Tail plane control and position indicator (routing and theoretical)	1

Equipment employed

1. The major components employed in the tail plane control circuit are listed below, together with the relevant Air Publications to which reference should be made for a detailed description and the necessary servicing required to maintain them in an efficient condition.

Actuator, Type A1603 or A1601 (*tail plane*)	*A.P.4343D, Vol. 1, Book 3, Sect. 14*
Reversing contactor (*main*), Type D8710	*A.P.4343, Vol. 1, Sect. 11*
Reversing contactor (*standby*), Type D8710	*A.P.4343C, Vol. 1, Book 2, Sect. 4*
Tumbler switch, 3-position, Type XD777/3 (*standby control*) Tumbler switch, D.P./ON-OFF, Type XD783/3 (*selector*)	*A.P.4343C, Vol. 1, Book 1, Sect. 1*
Control switch *(part of Dunlop A.C.14728 control handgrip)*	*A.P.4343X, Vol. 1, Sect. 7*
Micro-switch	*A.P.4343C, Vol. 1, Book 1, Sect. 2*
Tail plane position indicator, Smiths, Type 472FL... Transmitter, Desynn, Type D	*A.P.1275A, Vol. 1, Sect. 16*

DESCRIPTION

Tail plane control

Main control

2. The incidence of the tail plane is varied in flight by the action of a linear actuator located in the dorsal fin below the tail plane between frames 51 and 52. The actuator, which incorporates internal limit switches to control its range of movement, is provided with a standby motor to maintain operation should the main motor or its electrical control circuit fail. The main motor is controlled by a thumb switch on the control column via a reversing contactor, which is situated in the dorsal fin just forward of the actuator.

Standby control

3. The standby motor is controlled by a separate circuit, including its own reversing contactor, mounted with that for the main motor, which is energized by a switch

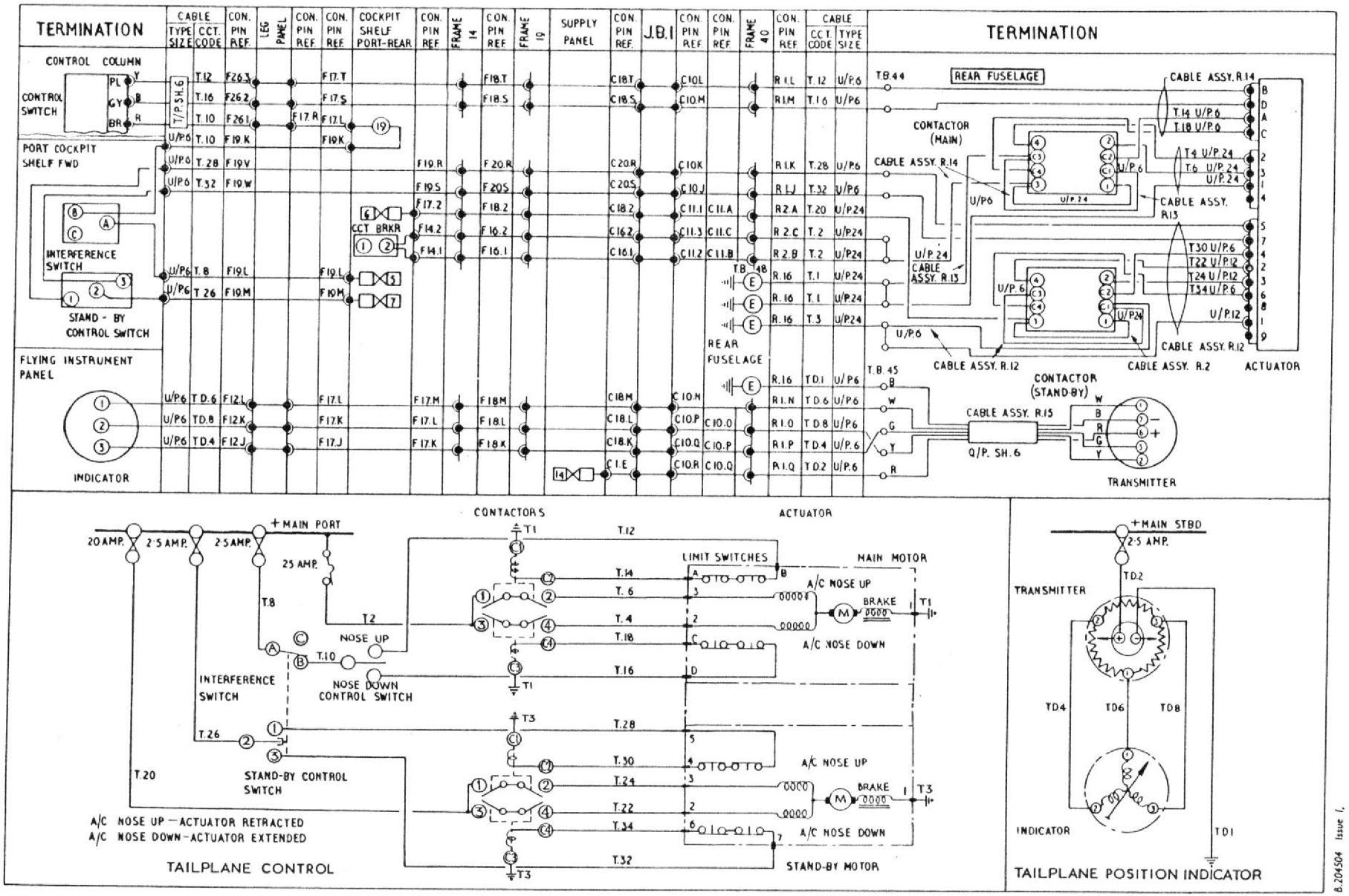

Fig. 1. Tail plane control and position indicator (routing and theoretical)

RESTRICTED

located under a guard cover on the forward portion of the cabin port shelf. Raising the guard cover, to enable the switch to be used, operates an interference micro switch, which automatically isolates the main control column switch circuit.

4. The incidence of the tail plane is shown on an indicator located on the centre instrument panel (*para. 10*).

Operation

Main control

5. The action of the control circuit for the tail plane actuator main motor is such that when the thumb rocker of the control column switch is pressed downwards, current is conducted from the control circuit fuse, through the contacts of the interference micro switch, which are made when the guard cover is locking the standby control switch, to the control column switch, and through this switch to pin B of the main motor limit switches. From pin B the current passes through the main motor limit switches, which are made until the actuator is fully retracted, to pin A of the motor limit switches. Pin A is in contact with one of the coils of the reversing contactor controlling the main motor, and the negative return of this coil is taken to earth. When the coil is energized, contacts 1 and 2 of the contactor are made and complete the circuit from the circuit breaker to pin 3 of the main motor. Pin 3 feeds the retracting field windings of the motor and the negative return is conducted to earth via pin 1 of the main motor.

6. The motor will thus rotate in such a direction as to retract the actuator ram and decrease the tail plane incidence, until switched off either by allowing the control column switch to return to the central position or by the operation of the limit switches when the actuator reaches the limit of its travel. When the control switch returns to the central position, the coil of the reversing contactor is de-energized, thus opening contacts 1 and 2 to break the main positive supply to the field windings. Operation of the limit switches de-energizes the reversing contactor in a manner similar to the action of the control switch.

7. When the thumb rocker of the control column switch is pressed upwards, current is conducted through the control switch to pin D of the main motor limit switches and energizes the other coil of the reversing contactor via the limit switches and pin C of the motor limit switches. The main positive supply from the circuit breaker will now be conducted through contacts 3 and 4 of the contactor and feed the "extend" field windings of the main motor. The negative return to earth is via pin 1 as before.

8. The motor will thus rotate in the reverse direction and extend the actuator ram to increase the tail plain incidence, until switched off either by the control switch or the limit switches in a similar manner to that described in paras 5 and 6.

Standby control

9. The standby control switch located on the forward portion of the cabin port shelf controls the actuator standby motor via its reversing contactor in a similar manner to the control column switch (*as described in paras 5 to 8*). When the guard cover locking the switch is lifted, it depresses the plunger of the interference micro switch, which opens the circuit to the control switch to isolate this control system from the main motor, thus preventing any fault in the circuit from affecting the operation of the standby control.

Tail plane position indicator

General

10. The incidence of the tail plane is shown on a Desynn indicator located on the port side of the centre instrument panel. This indicator is operated by a Desynn transmitter situated just above the actuator in the dorsal fin structure and linked to the actuator ram by a short operating rod.

Operation

11. For a full description of the Desynn system, together with the principle of operation, reference should be made to the relevant Air Publications (*listed in para. 1*).

SERVICING

General

12. For general servicing of the electrical system as a whole, reference should be made to Group A.1. All the components should be kept clean and inspected periodically for signs of damage and to ensure that they are securely mounted. Apart from the servicing described in paras. 13 and 14, together with the standard routine bench testing of the components, as described in the relevant Air Publications (*listed in para. 1*), no further servicing should be necessary.

Tail plane actuator

13. This actuator is manufactured to give the required range of travel and since the internal limit switches incorporated are pre-set, no further adjustment may be made. The functioning of the unit, however, should be checked over its full range to ensure that the correct travel (*as quoted in Sect. 3, Chap. 4*), is obtained. This check should be made with the tail plane selector switch in the OFF position, and by using both the main and standby control switches in turn. During the check of the main motor, the current and operating time must be checked in both directions of rotation. The load current and operating time for both directions must not exceed 11·0 amp. and 8·6 seconds respectively at 28 volts.

14. The actuator current may be recorded by connecting a 0 to 50 amp. ammeter into the negative return cable at the rear fuselage earthing point *(T.B.48 terminal 9)*. If a fault is reported in either the main or standby control circuits, the cause must be investigated and rectified before the next flight. Should a fault be found in the actuator, the unit must be removed and replaced with a fully serviceable unit and NO attempt must be made to service the actuator *in situ.*

Note

It is important that the actuator must not be bench tested unless a complete control circuit, such as that in the aircraft, is available because serious internal damage to the component can result from incorrect or incomplete connection.

Tail plane position indicator

15. The standard routine serviceability tests, which should be applied to the Desynn indicator and its transmitter, will be found in the relevant Air Publications *(listed in para. 1)*, while the method of adjusting the linkage between the transmitter and the actuator ram is contained in Sect. 3, Chap. 4.

REMOVAL AND ASSEMBLY

General

16. Once access has been obtained, the removal and assembly of the electrical components forming the tail plane control circuit should present no difficulties. The removal of the forward portion of the cabin port shelf, which carries the standby control switch and interference micro switch, is described in Group A.2. The location and access to all the components is indicated in Group A.3.

This file was downloaded
from the RTFM Library.

Link: www.scottbouch.com/rtfm

Please see site for usage terms,
and more aircraft documents.