GROUP H.1 WIRELESS AND RADAR SUPPLIES

(CODE RT, RN, IF and RS)

LIST OF CONTENTS

	Para.
Equipment employed	1
Description	
Wireless and radar supplies	2
Servicing	
General	7
Removal and assembly	
General	8

LIST OF ILLUSTRATIONS

	Fig.
V.H.F. and radio compass supply (theoretical)	1
V.H.F. and radio compass supply (routing)	2
I.F.F. and radar ranging supply (routing and theoretical)	3

Equipment employed

1. The major components employed in the wireless and radar supplies circuits are listed below, together with the relevant Air Publications to which reference should be made for a detailed description and the necessary servicing required to maintain them in an efficient condition.

Radar ranging and set selector switches	*A.P.4343C, Vol. 1, Book 1, Sect. 1*
Radar supply indicator	*A.P.4343E, Vol. 1, Sect. 18*
Inverter, Type 200	*A.P.4343B, Vol. 1, Sect. 16*
Circuit breakers, Type A.2 and A.6	*A.P.4343C, Vol. 1, Book 2, Sect. 10*
Change-over relay, Type 125	*A.P.2538H.A., Vol. 1, Sect. —*
Control relays	*A.P.4343C, Vol. 1, Book 2, Sect. 3*
Tele-briefing push switch, Type 1290	*A.P. 4343C, Vol. 1, Book —, Sect. —*
Tele-briefing lamp, Type A	*A.P.4343E, Vol. 1, Sect. 18*

DESCRIPTION

Wireless and radar supplies

2. Each wireless and radar installation is separately fused and obtains a supply from the supply panel in the radio bay. The supply for the twin V.H.F. installation is normally connected to No. 1 transmitter-receiver, via a fuse in the V.H.F. relay box attached to the lower longeron below the radio mounted structure, but the supply may be transferred from No. 1 to No. 2 transmitter-receiver, via another fuse in this box, by the energizing of relay G controlled by a set selector switch. The relay is mounted in the V.H.F. relay box, while the switch is situated on the cabin port shelf. Operation of the set selector switch also energizes relays C and D within the V.H.F. relay box, and an aerial change-over relay mounted on frame 19. Relays C and D transfer the press-to-transmit switch, microphone and telephones from No. 1 to No. 2 set and the change-over relay transfers the aerial to the set in use.

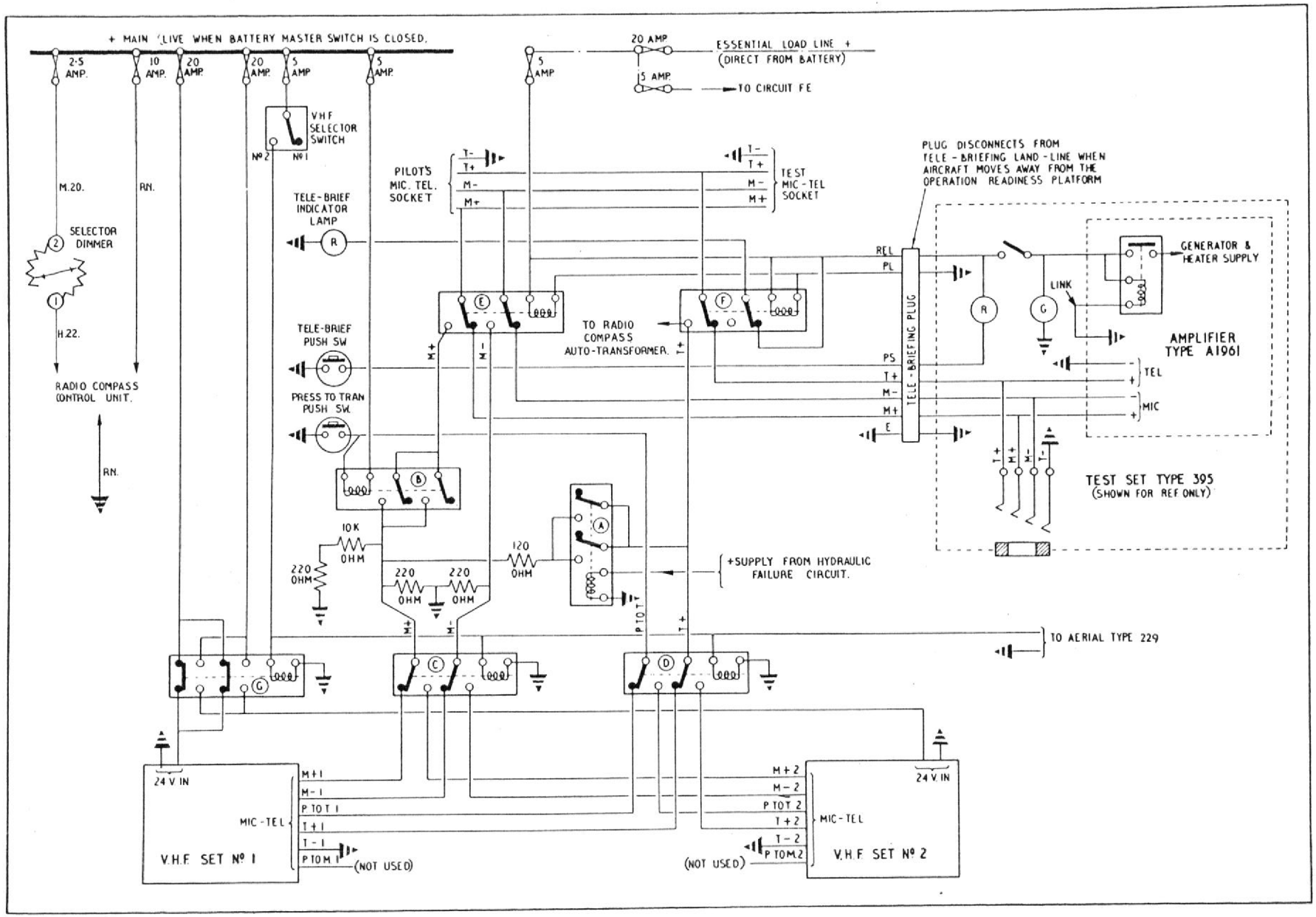

B.204538 Issue 2
(Modified for Mk. 52)

Fig. 1. V.H.F. and radio compass supply (theoretical)

RESTRICTED

3. The press-to-transmit switch is incorporated in the throttle lever and when depressed, makes the earth return for the microphone and press-to-transmit relay B, which is also mounted in the V.H.F. relay box and supplied from a fuse in this box. The audio warning relay A, which is also mounted in the V.H.F. relay box, is supplied and controlled by the hydraulic pressure circuit *(Group D.2)*. The tele-briefing relays E and F are also mounted in the relay box and supplied from a fuse in this box, the relays being energized by the insertion of the tele-briefing plug into its socket at the tail of the aircraft. A lamp located on the cabin port shelf indicates when the tele-briefing plug is inserted. A tele-briefing push-switch adjacent to this lamp should be depressed when it is required to talk over the system.

4. The press-to-transmit switch is incorporated in the throttle lever and, when depressed, makes the earth return for the microphone and press-to-transmit relay B, which is also mounted in the V.H.F. relay box and supplied from a fuse in this box. The audio warning relay A, which is also mounted in the V.H.F. relay box, is supplied and controlled by the hydraulic pressure failure warning circuit *(Group D.2)*. The tele-briefing relays E and F are also mounted in the relay box and supplied from a fuse in this box, the relays being energized by the insertion of the tele-briefing plug into its socket at the tail of the aircraft. A lamp, on the cabin port shelf, indicates when the tele-briefing plug is inserted and the push-switch, adjacent to this lamp, should be pressed in order to talk over the system.

5. The radio compass installation obtains its supply via a fuse on the cabin starboard shelf and is operated from a control panel also on this shelf *(described in Sect. 6, Chap. 1)*. The I.F.F. installation is supplied via a fuse on the supply panel and is controlled by four switches located on the cabin starboard shelf *(described in Sect. 6, Chap. 2)*. Reference to the above Chapters and the routing and theoretical diagrams of the power supplies for these installations will render further explanation unnecessary.

6. The supply for the radar ranging installation is obtained from No. 2 inverter in the A.C. supplies circuit *(Group E.1)* and from an inverter situated in the radio bay. The supply to the inverter is taken from a circuit breaker, mounted below the supply panel, via the contacts of a relay within the inverter. This relay is energized by the control and output of No. 2 flight instrument inverter and, when energized, completes the supply from the circuit breaker, thus causing the inverter to commence operation, providing that the ranging installation is switched on.

SERVICING

General

7. For general servicing of the electrical system, reference should be made to Group A.1. Apart from keeping all the components clean and carrying out the standard routine tests of security and serviceability as described in the relevant Air Publications *(listed in para. 1)*, no further servicing should be necessary. Should a fault be reported in either the wireless or radar installations, the supply circuit should be checked before any other tests are made, to ensure that the failure is not located in this circuit. Ensure that the connectors are correctly assembled and test the voltage both on and off load.

REMOVAL AND ASSEMBLY

General

8. Once access has been obtained, the removal and assembly of the electrical components forming the wireless and radar supply circuit should present no difficulties. The removal of the Type 200 inverter is fully described under the removal of the gun-firing panel *(Group A.2)* and the removal of the V.H.F. relay box, which carries the majority of the equipment, is covered in Sect. 6, Chap. 1.

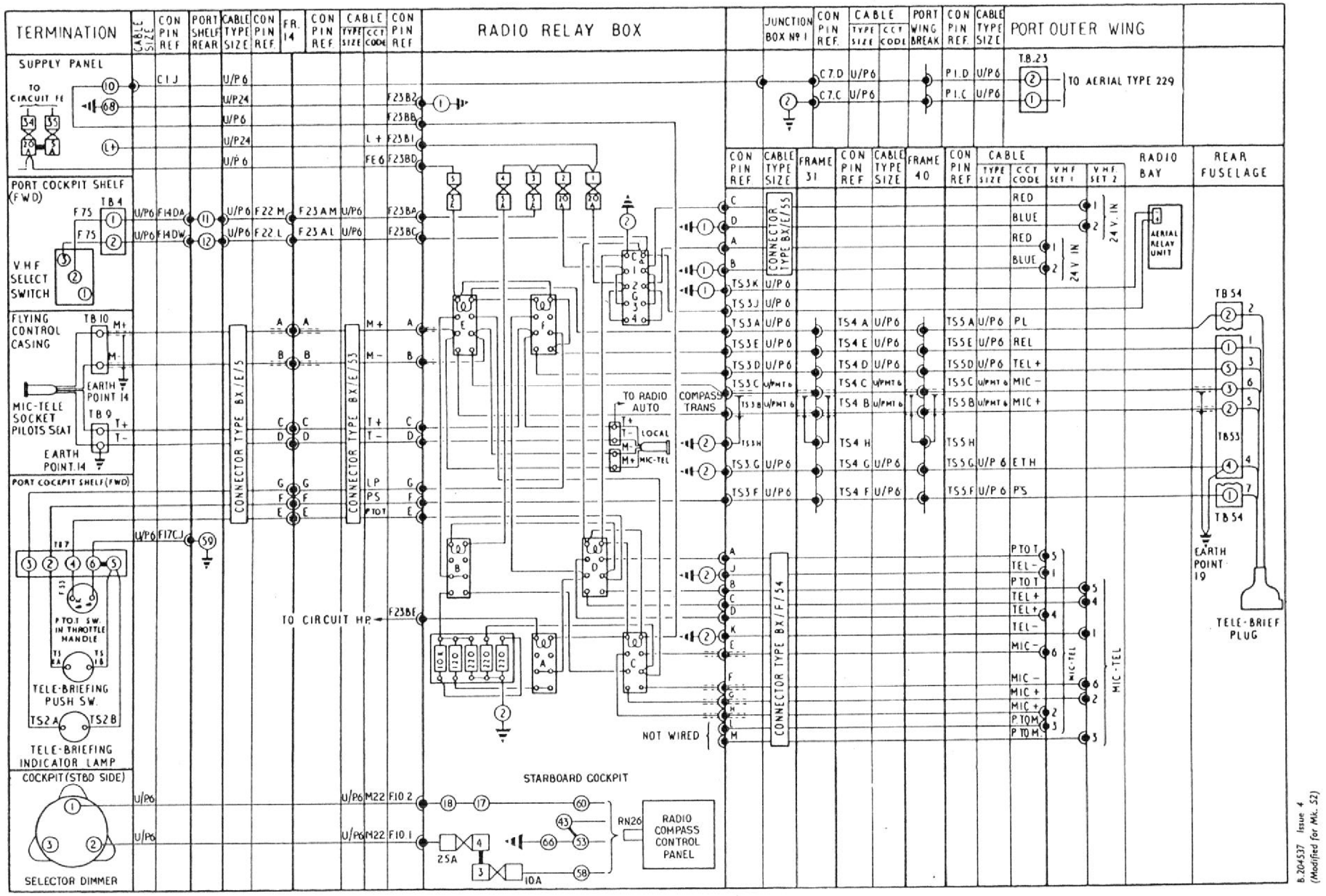

Fig. 2. V.H.F. and radio compass supply (routing)

RESTRICTED

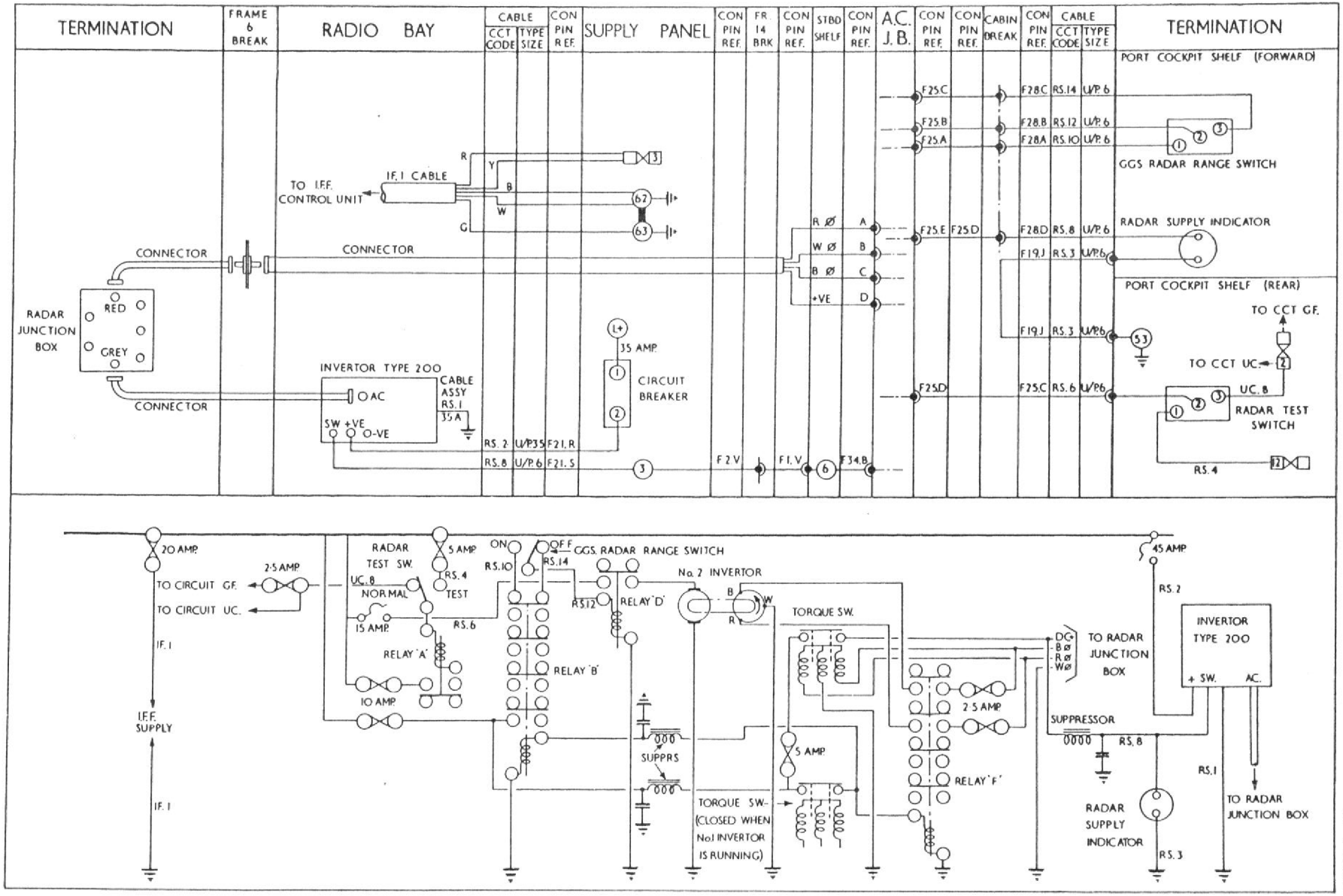

Fig. 3. I.F.F. and radar ranging supply (routing and theoretical)

RESTRICTED

This file was downloaded
from the RTFM Library.

Link: www.scottbouch.com/rtfm

Please see site for usage terms,
and more aircraft documents.