GROUP 1.C

LOCATION OF EQUIPMENT

LIST OF CONTENTS

	Para.
Introduction	1
Location of instruments and associated equipment	2
Access to instruments and associated equipment ...	3
Master index of instruments and associated equipment	4

LIST OF ILLUSTRATIONS

	Fig.
Instrument location—cabin	1
Instrument location—fuselage (1)	2
Instrument location—fuselage (2)	3
Instrument location—main planes...	4
Access panels	5

LIST OF TABLES

	Table
Master index of instruments and associated equipment	1

Introduction

1. This Group contains a master index of all the equipment and illustrations showing the location of and access to the various instruments and associated equipment installed in the aircraft. The master index also forms the key to the illustrations showing the location of the equipment.

Location of instruments and associated equipment

2. The location of the instruments and their associated equipment is illustrated in fig. 1 to 4 inclusive. These illustrations should be used in conjunction with the master index *(Table 1)* when it is required to locate any item of equipment.

Access to instruments and associated equipment

3. The position on the aircraft of all the access panels, which require opening or removing to gain access to the instruments and their associated equipment, is given in fig. 5. The illustration should be used in conjunction with Table 1 when it is required to obtain access to a particular component.

Master index of instruments and associated equipment

4. This master index *(given in Table 1)* should be employed in conjunction with the location and access panel illustrations when it is required to find the location and access to the various instruments and associated equipment. The components are listed in the order found in the Groups of this Chapter and each item is referenced by a number corresponding to that given in both the location and access panel illustrations. *(Spare item numbers are provided in each Group for modifications, etc.)*. The illustrations on which the components are shown are also indicated in the index; grid references are also given to assist in locating the items on the illustrations.

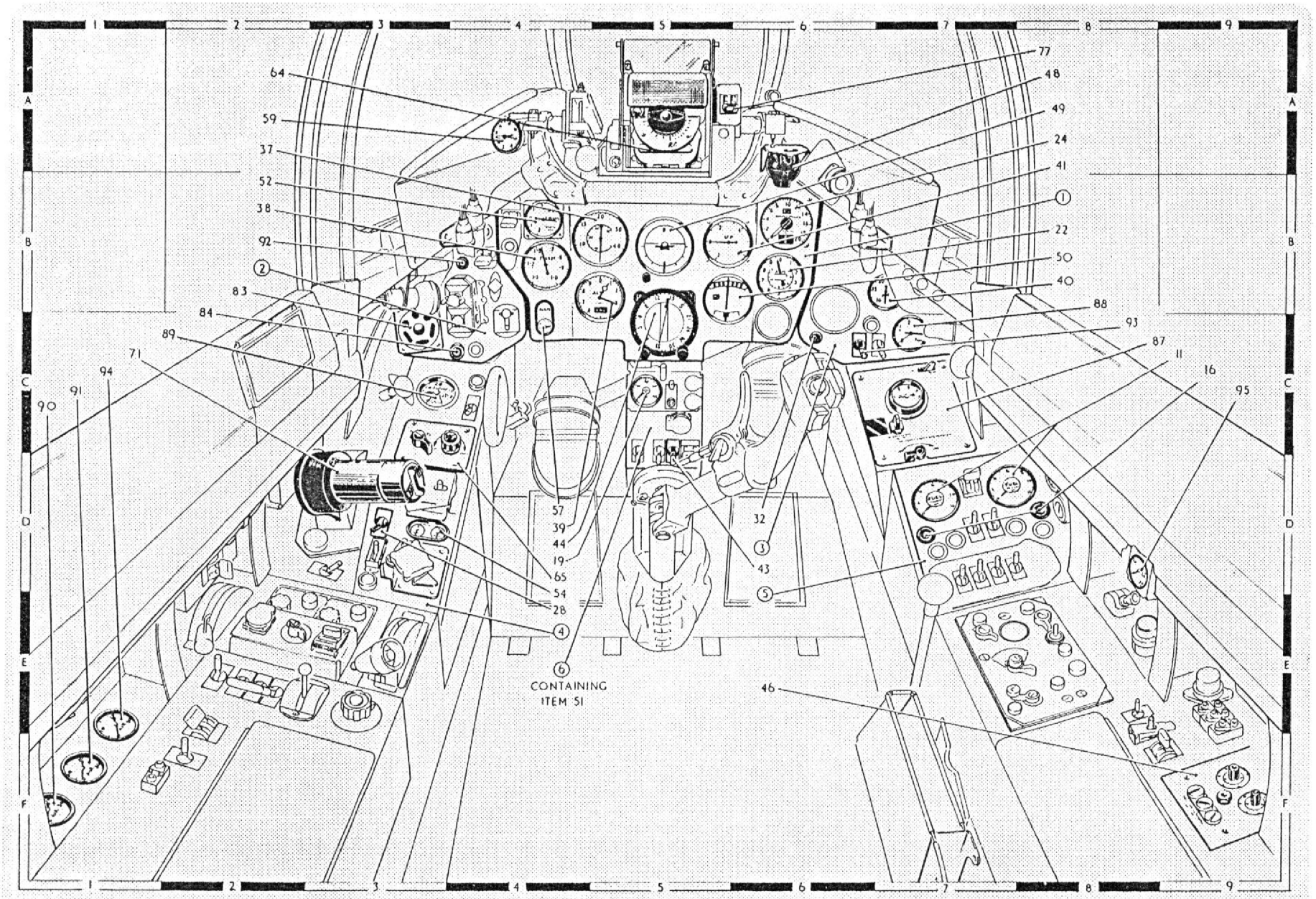

Fig. 1. Instrument location—cabin

TABLE I

Master Index of Instruments and Associated Equipment

Item	Equipment	Fig.	Grid Ref.
MAJOR COMPONENTS			
1	Centre instrument panel	1	*B.5*
2	Port instrument panel	1	*B.4*
3	Starboard instrument panel	1	*B.7*
4	Cabin port shelf	1	*D.2*
5	Cabin starboard shelf	1	*D.8*
6	Leg panel	1	*C.5*
7	————		
8	————		
9	————		
10	————		
ENGINE INSTRUMENTS			
11	Fuel content gauges	1	*D.7*
12	Fuel gauge amplifiers	2	*C.6*
13	Fuel gauge relay boxes	2	*D.7*
14	Fuel gauge tank units	2 4	*C.6 & D.8* *B.1 & B.2*
15	Transfer pressure switches	2	*D.7*
16	Transfer pressure failure indicators ...	1	*D.7 & D.8*
17	Fuel low level switches	2 4	*D.7* *B.2*
18	Engine fuel pressure switch	3	*D.1*
19	Oil pressure gauge	1	*C.5*
20	Oil pressure transmitter	3	*D.2*
21	Oil pressure auto-transformer	2	*C.4*
22	Tachometer	1	*B.6*
23	Tachometer generator	3	*D.2*
24	Exhaust gas thermometer	1	*B.6*
25	Thermo-couples	3	*C.8 & D.8*
26	Test socket	3	*C.6*
27	Top temperature magnetic amplifier ...	2	*C.5*
28	Jet pipe temperature control switch ...	1	*D.3*
29	Time switch	2	*C.1*
30	Adjusting resistor	2	*C.5*
31	Top temperature override micro switch	2	*D.1*
32	Fuel low pressure warning light ...	1	*C.6*
33	————		
34	————		
35	————		
36	————		
FLYING INSTRUMENTS			
37	Air speed indicator	1	*B.5*
38	Machmeter	1	*B.4*
39	Altimeter	1	*B.5*
40	Cabin altimeter	1	*B.7*
41	Rate-of-climb indicator	1	*B.5*
42	Pressure head and heater	4	*D.3*
43	Pressure head heater switch	1	*D.5*

(Continued overleaf)

TABLE I

Master Index of Instruments and Associated Equipment *(Contd.)*

Item	Equipment	Fig.	Grid Ref.	Item	Equipment	Fig.	Grid Ref.
44	Gyro compass	1	*B.5*	49	Artificial horizon...	1	*B.5*
45	Gyro compass precession amplifier ...	2	*C.5*	50	Turn and slip indicator	1	*B.6*
46	Gyro compass corrector control box ...	1	*F.9*	51	Turn and slip relay	1	*C.5*
47	Gyro compass detector unit	4	*D.4*	52	Tail plane position indicator	1	*B.4*
48	Standby compass...	1	*A.6*	53	Tail plane position transmitter ...	3	*B.6*

(Continued overleaf)

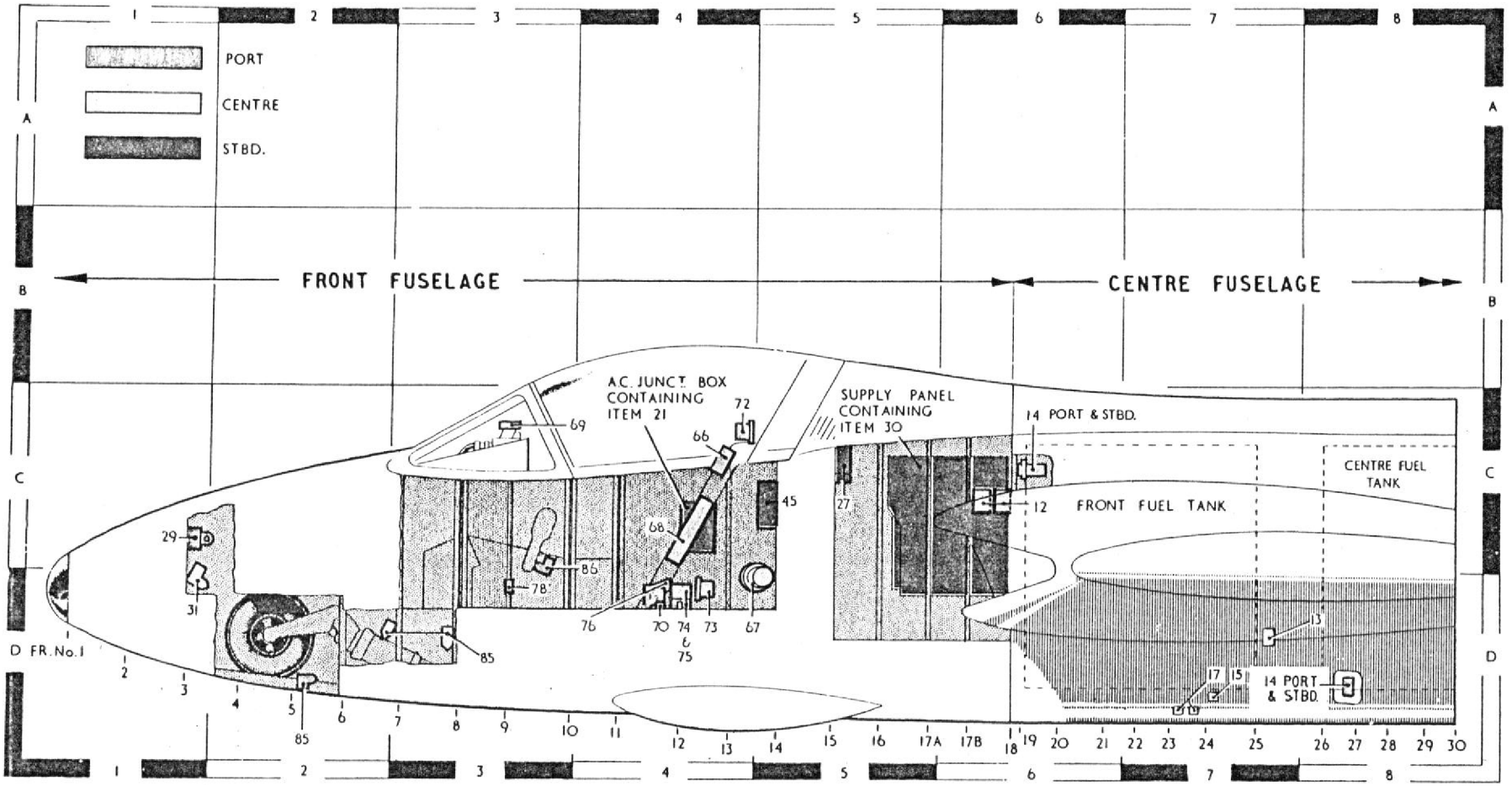

Fig. 2. Instrument location—fuselage (I)

TABLE 1

Master Index of Instruments and Associated Equipment *(Contd.)*

Item	Equipment	Fig.	Grid Ref.	Item	Equipment	Fig.	Grid Ref.
54	Rudder and aileron trim indicators ...	1	*D.3*	59	Accelerometer	1	*A.4*
55	Rudder tab position transmitter ...	3	*A.7*	60	————		
56	Aileron tab position transmitter ...	4	*C.4*	61	————		
57	Flap position indicator	1	*B.4*	62	————		
58	Flap position transmitter	4	*A.3*	63	————		

(Continued overleaf)

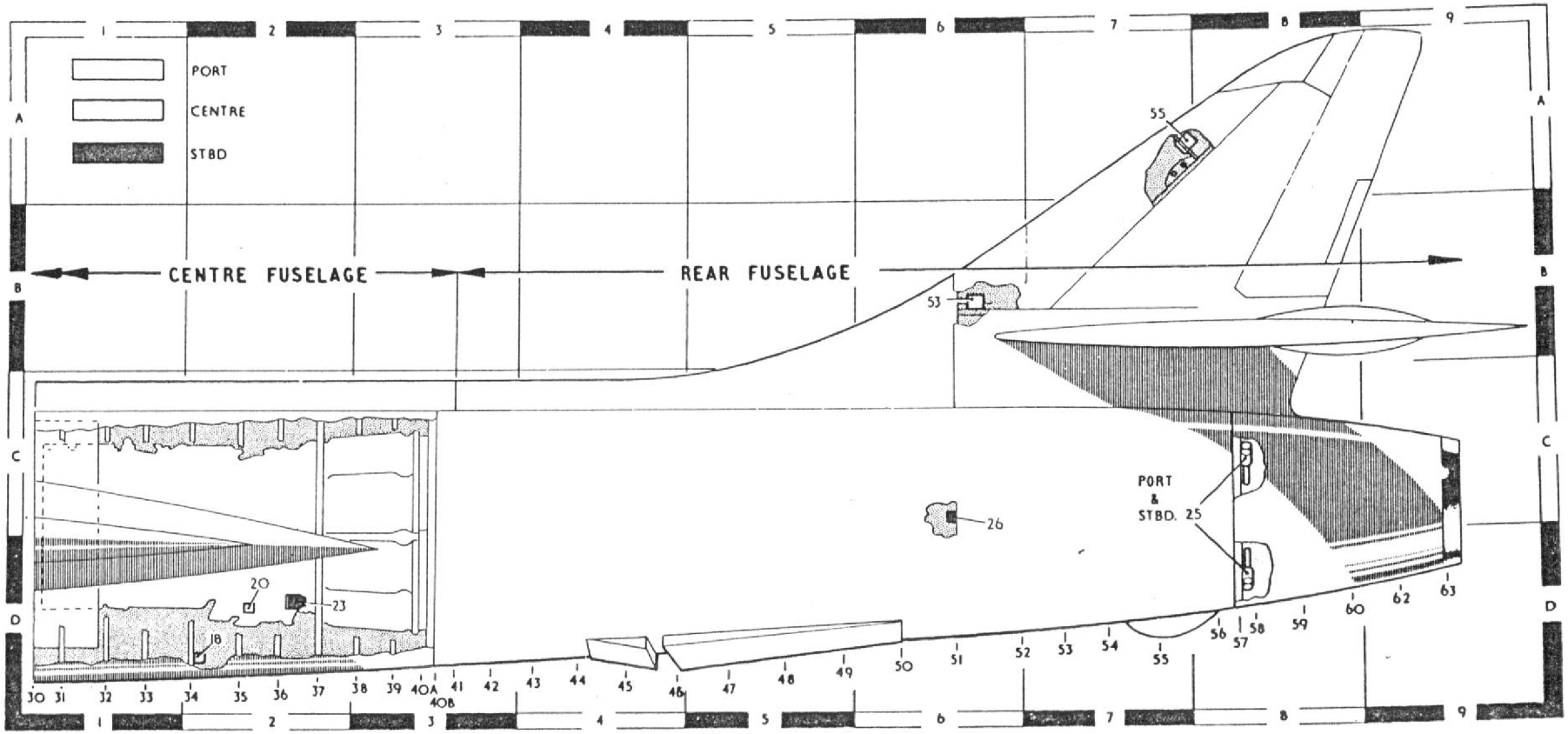

Fig. 3. Instrument location—fuselage (2)

TABLE I

Master Index of Instruments and Associated Equipment *(Contd.)*

Item	Equipment	Fig.	Grid Ref.
	ARMAMENT INSTRUMENTS		
64	Gyro gunsight	1	*A.5*
65	Selector dimmer unit	1	*C.3*
66	Ballastics unit	2	*C.4*
67	Altitude unit	2	*C.5*
68	Control unit Type B Mk. 11	2	*C.4*
69	Camera recorder	2	*C.3*
70	Suppressor Type F.2	2	*D.4*
71	Control unit Type T.1 Mk. 2	1	*D.3*
72	Radar/Manual unit	2	*C.4*
73	Relay amplifier	2	*D.4*
74	Voltage regulators	2	*D.4*
75	Test sockets	2	*D.4*
76	Suppressor type F.5	2	*D.4*
77	Gunsight switch	1	*A.5*
78	Control unit Type T.B. Mk. 1	2	*D.3*
79	————		
80	————		
81	————		
82	————		
	MISCELLANEOUS INSTRUMENTS		
83	Alighting gear indicator	1	*B.3*
84	Alighting gear warning lamp	1	*C.3*
85	Undercarriage leg and wheel door micro switches	2 4	*D.2 & D.3* *A.2, A.3, B.2 & B.3*
86	Throttle micro switch	2	*C.3*
87	Oxygen regulator...	1	*C.7*
88	Oxygen pressure gauge	1	*C.7*

(Continued overleaf)

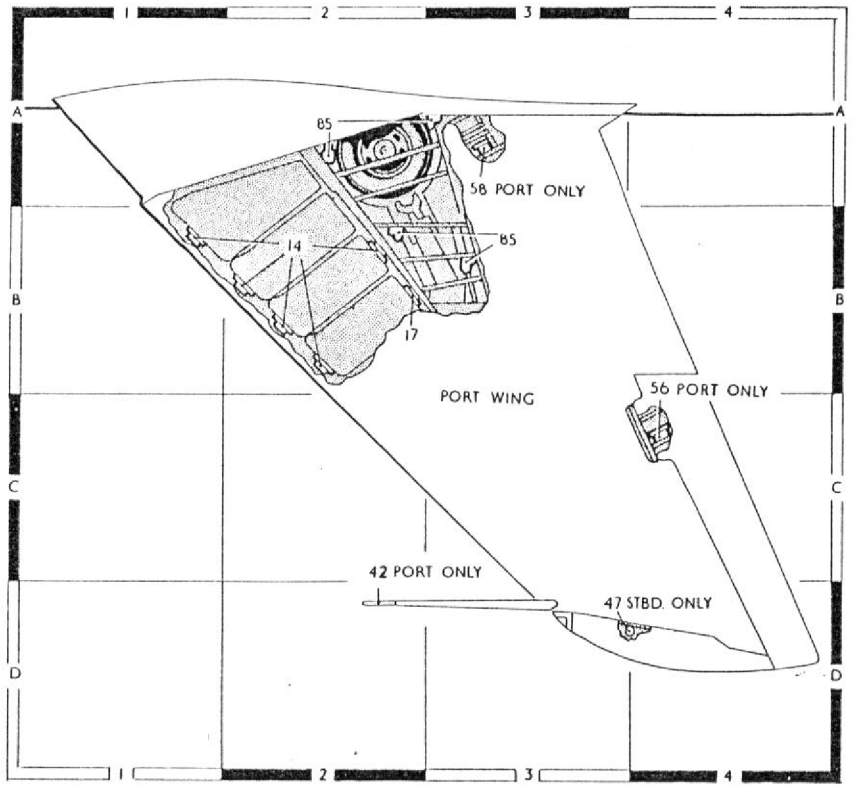

Fig. 4. Instrument location—main planes

TABLE 1

Master Index of Instruments and Associated Equipment (*Contd.*)

Item	Equipment	Fig.	Grid Ref.	Item	Equipment	Fig.	Grid Ref.
89	Brake and main hydraulic pressure gauge	1	*C.3*	94	Brake emergency air pressure gauge ...	1	*E.1*
90	Undercarriage emergency air pressure gauge	1	*F.1*	95	Anti-G system pressure gauge	1	*E.8*
91	Flaps emergency air pressure gauge ...	1	*F.1*	96	————		
92	Hydraulic failure warning lamp ...	1	*B.4*	97	————		
93	Hydraulic failure audio warning cut-out switch	1	*C.6*	98	————		
				99	————		
				100	————		

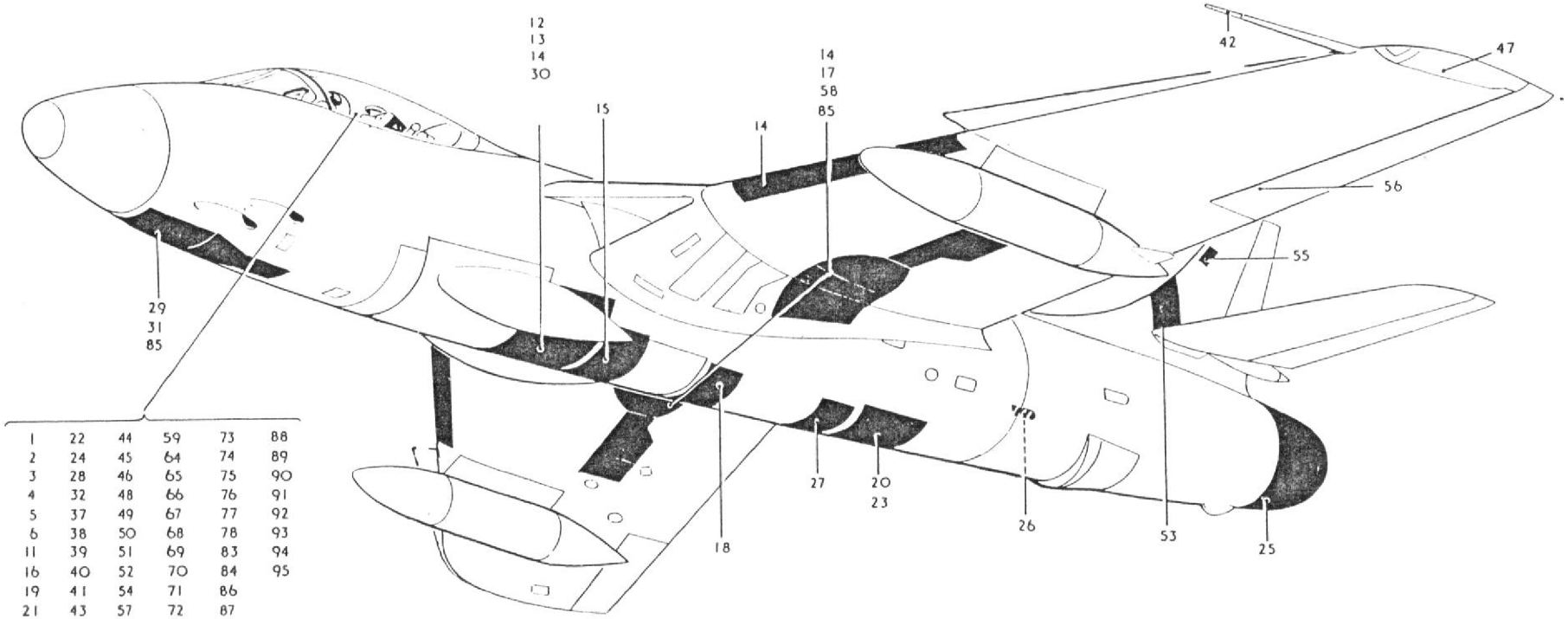

Fig. 5. Access panels

This file was downloaded
from the RTFM Library.

Link: www.scottbouch.com/rtfm

Please see site for usage terms,
and more aircraft documents.