TABLE OF CONTENTS

Chapter 76 - Engine Controls

76-1	Control Linkage
76-2	R.P.M. Synchroniser Alternator
76-3	R.P.M. Synchroniser Corrector
76-4	Temperature Signal Amplifier

S-Av
524Ct
WB/1

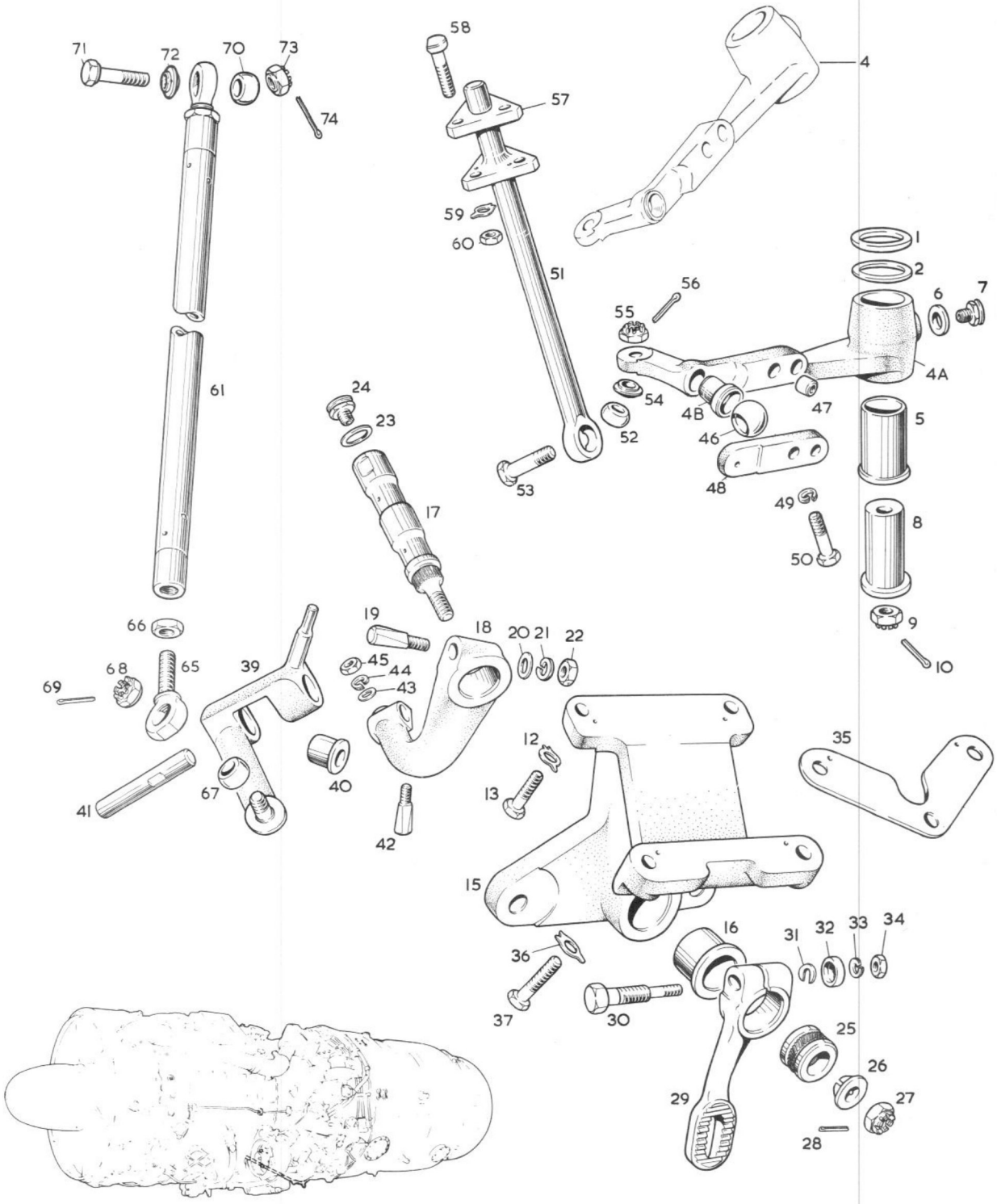

76-1
Figure 1 Control Linkage

Printed in Scotland

S-Av524-Ct.
S-Av525-Ct.

Sept./64

FIG. AND INDEX NO.	PART NUMBER	DESCRIPTION 1 2 3 4 5 6 7	MATERIAL	USAGE CODE	UNITS PER ASSY
		Linkage Assembly-Control			
1-1	-	. Washer-Adjusting, synchroniser corrector control lever to sump-mounted spindle	S/NTV		1AR
	BA63975	.125" thick)			
	BA63976	.130" thick)			
	BA63977	.135" thick)			
	BA63978	.140" thick)			
	BA63979	.145" thick)			
	BA63980	.150" thick)			
	BA63981	.155" thick)			
	BA63982	.160" thick)			
	BA63983	.165" thick)			
	BA63984	.170" thick)			
	BA63985	.175" thick)			
1-2	BR7744	. Washer-Plain, synchroniser corrector control lever to sump-mounted spindle	BZ/PC		1
-3	-	. Lever Assembly-Control, R.P.M. synchroniser corrector	-		1
	BR7740A	(Pre-Mod.3274)			
	BR67040A	(Mod.3274)			
	-	. . Lever	S/ZMN		1
1-4	BR7741	(Pre-Mod.3274)			
1-4A	BR67041	(Mod.3274)			
1-4B	BR67042	. . Insert-Lever, synchroniser units linkage (Mod.3274)	S/XCR		1
1-5	BR7743	. . Bush-Bearing, control lever	BZ/PC		1
1-6	-	. . Washer-Joint grease nipple	A		1
	BA68069	(Pre-Mod.3183)			
	KB1076	(Mod.3183)			
1-7	-	. . Nipple-Grease	-		1
	RK5269	(Pre-Mod.2272)			
	PP34139	(Mod.2272)			

Printed in Great Britain

FIG. AND INDEX NO.	PART NUMBER	DESCRIPTION 1 2 3 4 5 6 7	MATERIAL	USAGE CODE	UNITS PER ASSY
1-8	BR7742	. Sleeve-Eccentric, synchroniser corrector control lever	S/SPC		1
		ATTACHING PARTS			
1-9	KL3639	. Nut-Castellated	S/MC		1
R 1-10	-	. Pin-Split	Stbr		1
R	KB6853	(Pre-Mod 3528)			
R	1309375	(Mod 3528)			
		* * *			
-11	BR3048A	. Bracket and levers Assembly-Control linkage	-		Ref
		ATTACHING PARTS			
1-12	KB7106	. Washer-Tab	Stbr		2
1-13	CY1897	. Screw-Hex.hd.	NMC		2
		* * *			
-14	BA98298A	. . Bracket Assembly-Mounting, levers	-		1
1-15	BA94234/1	. . . Bracket	EXP.99		Ref
1-16	-	. . . Bush-Bearing, levers spindle	BZ/PC		2AR
	BA58944	Nominal			
	BR59795	.005" o/s. (ARS.3263)			
	BR71484	.010" o/s (ARS3263)			
1-17	BA58948	. . Spindle-Levers	S/N		1
1-18	BA63993	. . Lever-Compensator	S/M		1
		ATTACHING PARTS			
1-19	KL7705	. . Pin-Cotter	S/N		1
1-20	KJ4404	. . Washer-Plain	S/MD		1
1-21	KJ4506	. . Washer-Spring, grover	S/CS		1
1-22	KJ4307	. . Nut-Lock	S/MC		1
		* * *			

S-Av
524
525 Ct

	FIG. AND INDEX NO.	PART NUMBER	DESCRIPTION 1 2 3 4 5 6 7	MATERIAL	USAGE CODE	UNITS PER ASSY
	1-23	KB1076	. . Washer-Joint, grease nipple	AL.17		1
	1-24	-	. . Nipple-Grease	-		1
		RK5269	(Pre-Mod.2272)			
		PP34139	(Mod.2272)			
	1-25	BA58947	. . Hub-A/C pick-up lever	S/N		1
	1-26	BA458	. . Collet-Split, A/C pick-up lever hub	S/N		1
			ATTACHING PARTS			
	1-27	KL3637	. . Nut-Castellated	S/MC		1
R	1-28	-	. . Pin-Split	Stbr		1
R		KB6852	(Pre-Mod 3528)			
R		1309374	(Mod 3528)			
			* * *			
	1-29	BA58946	. . Lever-A/C pick-up	S/M		1
			ATTACHING PARTS			
	1-30	BA42972	. . Screw-Worm, Hex.hd.	S/N		1
	1-31	BA42973	. . Piece-Retaining, worm screw	S/M		1
	1-32	BA42974	. . Washer-Cup, retaining piece	S/M		1
	1-33	KJ4506	. . Washer-Spring, grover	S/CS		1
	1-34	KJ4006	. . Nut-Plain	S/MC		1
			* * *			
	1-35	BA94888A	. Bracket Assembly-Mounting, oil pipe and L.T. harness clamping block	-		1
			ATTACHING PARTS			
	1-36	KB7106	. Washer-Tab	Stbr		2
	1-37	BA33371	. Screw-Hex.hd., clamping block and levers mounting brackets	S/NCV		2
			* * *			

Printed in Great Britain

This page left blank intentionally

FIG. AND INDEX NO.	PART NUMBER	DESCRIPTION 1 2 3 4 5 6 7	MATERIAL	USAGE CODE	UNITS PER ASSY
-38	BA99050A	. Lever Assembly-Bellcrank	-		1
1-39	BA97217	. . Lever	S/ZNM		Ref
1-40	BA58497	. . Bush-Bearing, pivot pin	BZ/AF		2
1-41	BA58495	. Pin-Pivot, bellcrank lever	S.80		1
		ATTACHING PARTS			
1-42	KL7704	. Pin-Cotter	S/N		1
1-43	KJ4446	. Washer-Plain	S/MD		1
1-44	KJ4505	. Washer-Spring, grover	S/CS		1
1-45	KJ4304	. Nut-Lock	S/MC		1
		* * *			
1-46	BA63990	. Ball-Pivot, bellcrank lever	BZ/AF		1
1-47	BA97223	. Dowel-Locating, pivot ball spherical ended cap	S/NTV		2
1-48	BA97221	. Cap-Spherical end, pivot ball	S/ZNM		1
		ATTACHING PARTS			
1-49	KJ4506	. Washer-Spring, grover	S/CS		2
1-50	KM156	. Screw-Hex.hd.	S/NTV		2
		* * *			
1-51	BR4049	. Rod-Synchroniser corrector to control lever	S/ZNM		1
1-52	-	. Bush-Spherical, synchroniser corrector/control lever rod to control lever	S/HCS		1
	BA44421	(Pre-Mod.1286)			
	BR5408	(Mod.1286)			
		ATTACHING PARTS			
1-53	-	. Bolt-Hex.hd.	S/NTV		1
	BA97222	(Pre-Mod.1810)			
	BR22476	(Mod.1810)			
1-54	BA46145	. Piece-Distance	S/ZN		1
1-55	BA63968	. Nut-Castellated	S/MC		1
R 1-56	-	. Pin-Split	Stbr		1
R	KB6853	(Pre-Mod 3528)			
R	1309375	(Mod 3528)			
		* * *			

Printed in Great Britain

FIG. AND INDEX NO.	PART NUMBER	DESCRIPTION 1 2 3 4 5 6 7	MATERIAL	USAGE CODE	UNITS PER ASSY
1-57	-	. Plate-Adjusting, synchroniser corrector/control lever rod to synchroniser corrector	S/MN		1AR
	BR912	.100" thick)			
	BR913	.105" thick)			
	BR914	.110" thick)			
	BR915	.115" thick)			
	BR916	.120" thick)			
	BR917	.125" thick)			
	BR918	.130" thick)			
	BR919	.135" thick)			
	BR920	.140" thick)			
	BR921	.145" thick)			
	BR922	.150" thick)			
	BR923	.155" thick)			
	BR924	.160" thick)			
	BR925	.165" thick)			
	BR926	.170" thick)			
	BR927	.175" thick)			
	BR928	.180" thick)			
	BR929	.185" thick)			
	BR930	.190" thick)			
	BR931	.195" thick)			
	BR932	.200" thick)			
		ATTACHING PARTS			
1-58	KL10259	. Bolt-'D' head	S/NTV		3
1-59	KB7104	. Washer-Tab	Stbr		3
1-60	KJ4006	. Nut-Plain	S/MC		3
		* * *			
1-61	BA58949	. Tube Assembly-Control, Bellcrank lever to F.C.U.	-		1
-62	BA58950	. . Tube	S/D		Ref
-63	BA36463	. . Adaptor	S/M		Ref
-64	KB3857	. . Pin-Taper	S/SFM		Ref
1-65	BR8101	. Housing-Control tube spherical bushes	S/ZNM		2
		ATTACHING PART			
1-66	KJ4313	. Nut-Lock	S/MC		2
		* * *			

S-Av
524
525

	FIG. AND INDEX NO.	PART NUMBER	DESCRIPTION 1 2 3 4 5 6 7	MATERIAL	USAGE CODE	UNITS PER ASSY
	1-67	-	. Bush-Spherical, control tube to bellcrank lever	S/HCS		1
		BA44421	(Pre-Mod.1286)			
		BR5408	(Mod.1286)			
			ATTACHING PARTS			
	1-68	BA63968	. Nut-Castellated	S/MC		1
R	1-69	-	. Pin-Split	Stbr		1
R		KB6853	(Pre-Mod 3528)			
R		1309375	(Mod 3528)			
			* * *			
	1-70	-	. Bush-Spherical, control tube to F.C.U.	S/HCS		1
		BA44421	(Pre-Mod.1286)			
		BR5408	(Mod.1286)			
			ATTACHING PARTS			
	1-71	BA65251	. Bolt-Hex.hd.	S/NTV		1
	1-72	BA46145	. Piece-Distance	S/ZN		1
	1-73	BA65252	. Nut-Castellated	S/MC		1
R	1-74	-	. Pin-Split	Stbr		1
R		KB6853	(Pre-Mod 3528)			
R		1309375	(Mod 3528)			
			* * *			
			* * * * * *			

Printed in Great Britain

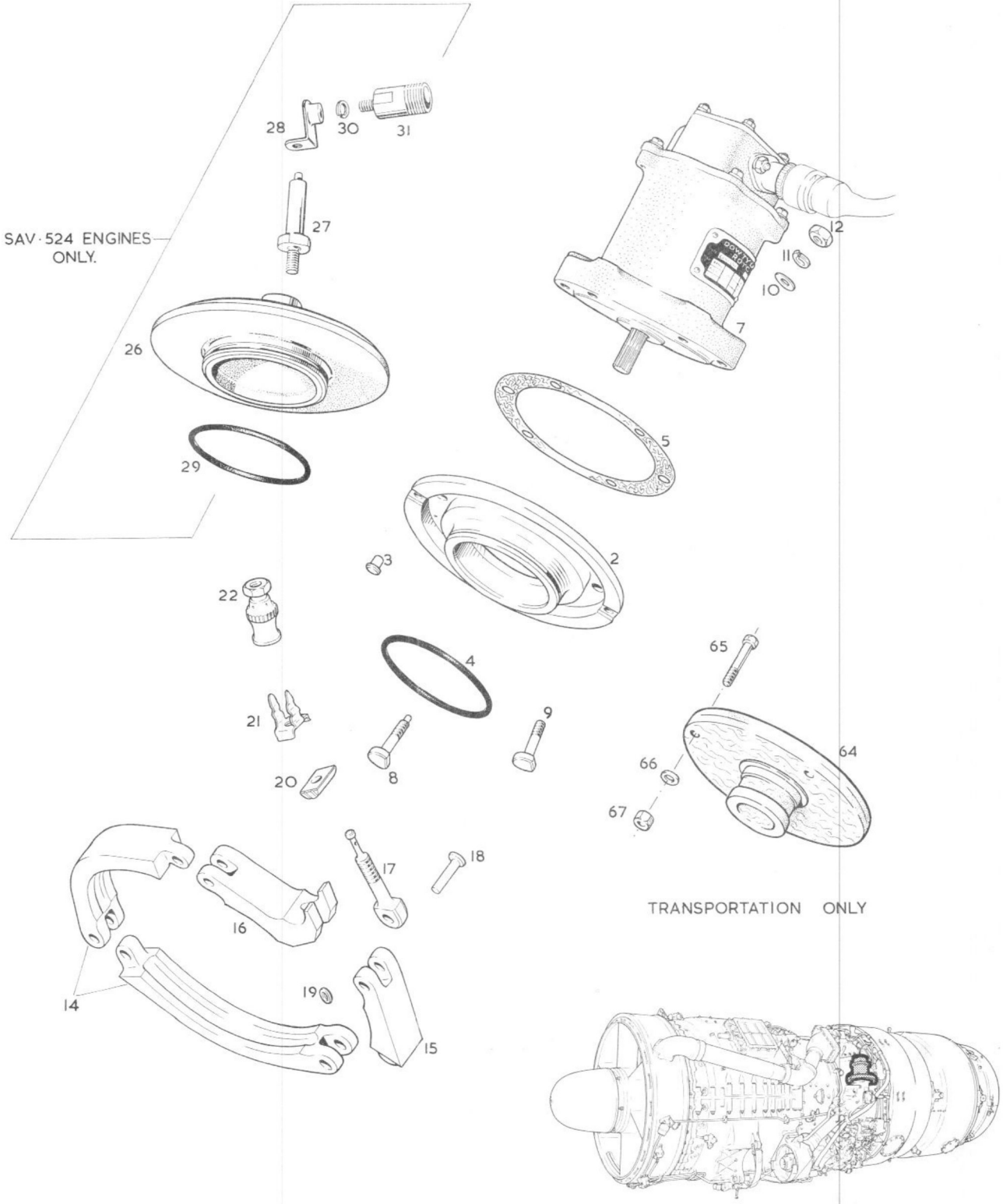

76-2

Figure 1 R.P.M. Synchroniser Alternator

Printed in Scotland

S-Av524-Ct
S-Av525-Ct

Mar./63

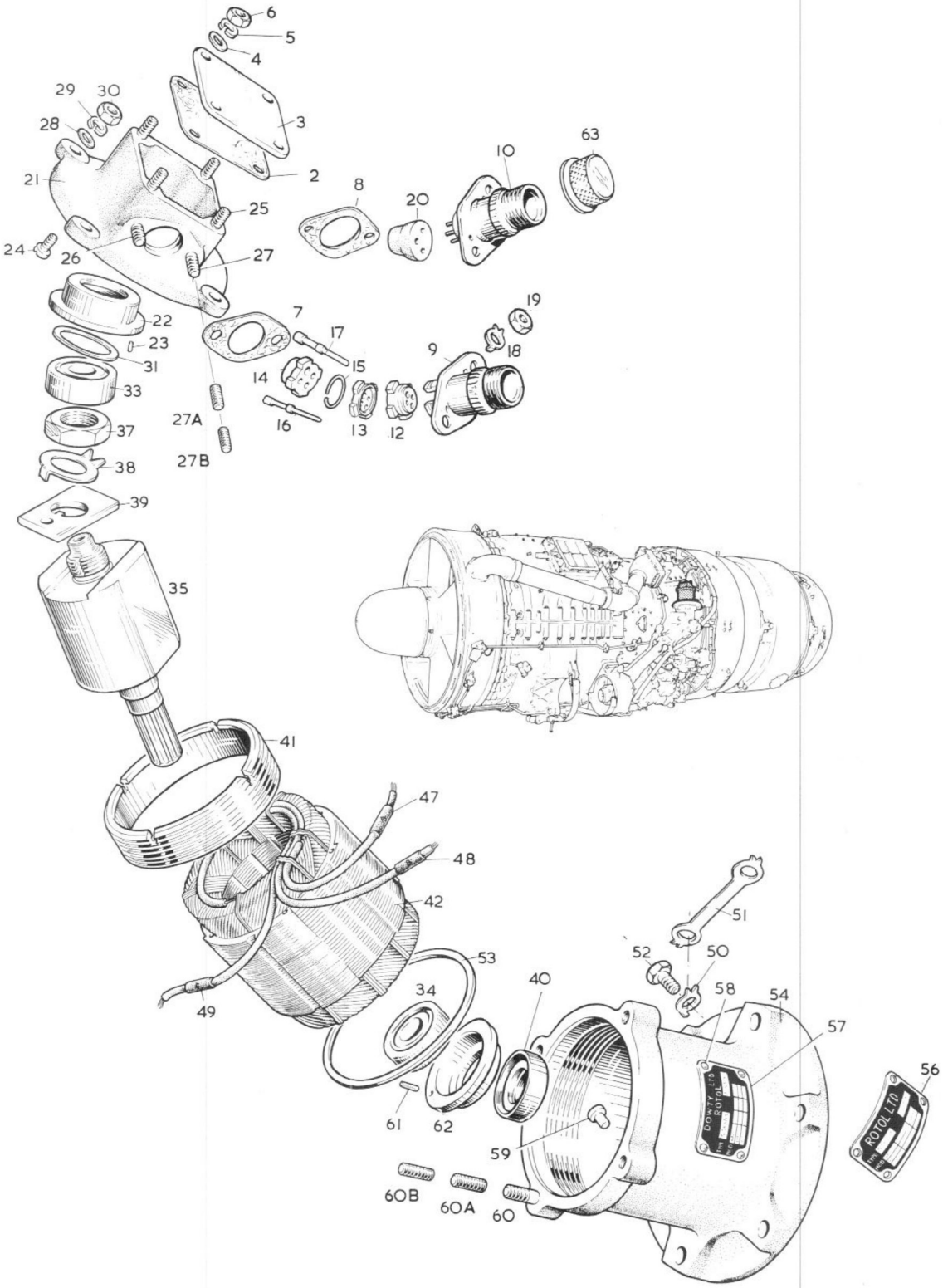

Printed in Scotland

S-Av524-Ct
S-Av525-Ct

Figure 2 R.P.M. Synchroniser Alternator

R.P.M. SYNCHRONISER ALTERNATOR

	FIG. AND INDEX NO.	PART NUMBER	DESCRIPTION 1 2 3 4 5 6 7	MATERIAL	USAGE CODE	UNITS PER ASSY
			Alternator Assembly-R.P.M.synchroniser			
	-1	BA96094	. Flange Assembly-Mounting, R.P.M. synchroniser alternator	-		1
	1-2	BA94100	. . Flange	A/F		Ref
	1-3	BA96072	. . Dowel-Locating, mounting flange	S/NTV		2
R	1-4	-	. Ring-Sealing, rubber, 2.856" i/dia. x .106" thick, R.P.M. synchroniser alternator mounting flange	PE/EK		1
R		KB16704	(Pre-Mod.3488)			
R		KB22774	(Mod.3488)			
	1-5	BA96095	. Jointing-R.P.M. synchroniser alternator	J.2		1
		-	. Alternator Assembly-'Rotol' (For details refer to 76-2 Page 3)	-		1
	-6	3700734	(Pre-Mod.1852) (SNA.18)			
	1-7	3701480	(Mod.1852, Pre-Mod.2321) (SNA.18)			
		3704286	(Mod.2321, Pre-Mod.2352) (SNA.18)			
		3704493	(Mod.2352, Pre-Mod.2594) (SNA.18)			
		3704496	(Mod.2352, Part 2B, Pre-Mod.2594, Part 2) (SNA.18)			
		3705400	(Mod.2594, Pre-Mod.2703) (SNA.18)			
		3705260	(Mod.2594, Part 2, Pre-Mod.2703) (SNA.18)			
		3705545	(Mod.2703) (6.1001.1001)			
			ATTACHING PARTS			
	1-8	BA94108	. Bolt-'D' head, with dowel extension	S/NTV		1
	1-9	KL10664	. Bolt-'D' head	S/NTV		5
	1-10	KJ4407	. Washer-Plain	S/MD		6
	1-11	KJ4508	. Washer-Spring, grover	S/CS		6
	1-12	KJ4310	. Nut-Lock	S/MC		6
			* * *			
	-13	BR4240	. Ring Assembly-Clamp R.P.M. synchroniser alternator	-		1
	1-14	BA78610	. . Link-Long	A/F		Ref
	1-15	BA78609	. . Link-Short	A/F		Ref
	1-16	BA78608	. . Link-Half	A/F		Ref
	16A	BA72995	. . Pin-Pivot, links	S/NTV		Ref
	16B	BA72996	. . Collar-Links, pivot pins	S/MN		Ref

Printed in Great Britain

S-Av 524 525 Ct

FIG. AND INDEX NO.	PART NUMBER	DESCRIPTION 1 2 3 4 5 6 7	MATERIAL	USAGE CODE	UNITS PER ASSY
1-17	BR3863	. . Bolt-Eye (ARS.3146)	S/NTV		1
1-18	BA72995	. . Pin-Pivot, links (ARS.3146)	S/NTV		1
1-19	BA72996	. . Collar-Links, pivot pins(ARS.3146)	S/MN		1
1-20	BR2181	. . Piece-Saddle, clamp ring retaining nut (ARS.3146)	S/NTV		1
1-21	BR2180	. . Spring-Locking, clamping ring retaining nut (ARS.3146)	S/FH		1
1-22	BR4241	. . Nut-Clamp ring	S/LC		1
-23	BR4242	. . Wire-Locking clamp ring retaining nut (Pre-Mod.1409)	-		1
		TRANSPORTATION PARTS Items required only for Transportation of Engines which are minus the R.P.M. Synchroniser Alternator			
-24	BR10142A	. Cover Assembly-R.P.M. synchroniser alternator mounting flange facing (Mod.1709)(Avon 524B Only)	-		1
-25	BR10143A	. . Cover Sub Assembly-R.P.M. synchroniser alternator mounting flange facing (Mod.1709)(Avon 524B Only)	-		1
1-26	BR10144	. . . Cover-R.P.M. synchroniser alternator mounting flange facing (Mod.1709)(Avon 524B Only)	A/C		1
1-27	BA91087	. . . Trunnion-Mounting, harness support socket arm (Mod.1709) (Avon 524B Only)	S/MN		Ref
1-28	BR20708A	. . . Arm Assembly-Harness Support socket (Mod.1709)(Avon 524B Only)	-		Ref
R 1-29	-	. . . Ring-Sealing, cover (Avon 524B Only)	PE/EK		1
R	KB16074	(Mod.1709, Pre-Mod.3488)			
R	KB22774	(Mod.3488)			
1-30	KJ4508	. . Washer-Spring, grover, socket support (Mod.1709)(Avon 524B Only)	S/CS		1
1-31	BA91025	. . Socket-Support, harness (Mod.1709) (Avon 524B Only)	S/M		1

S-Av 524 525 Ct

R.P.M. SYNCHRONISER ALTERNATOR
(Type S.N.A.18)

Spares information obtainable from the
De-Havilland Comet Overhaul Manual

Chapter 76-2-11

ROTOL PUBLICATION No.858/2

S-Av
524
525 Ct

R.P.M. SYNCHRONISER CORRECTOR MOTOR
(Type S.N.C.13)

Spares information obtainable from
the De-Havilland Comet Overhaul Manual

Chapter 76-2-21

ROTOL PUBLICATION No.858/2

S-Av
524
525 Ct

Printed in Scotland

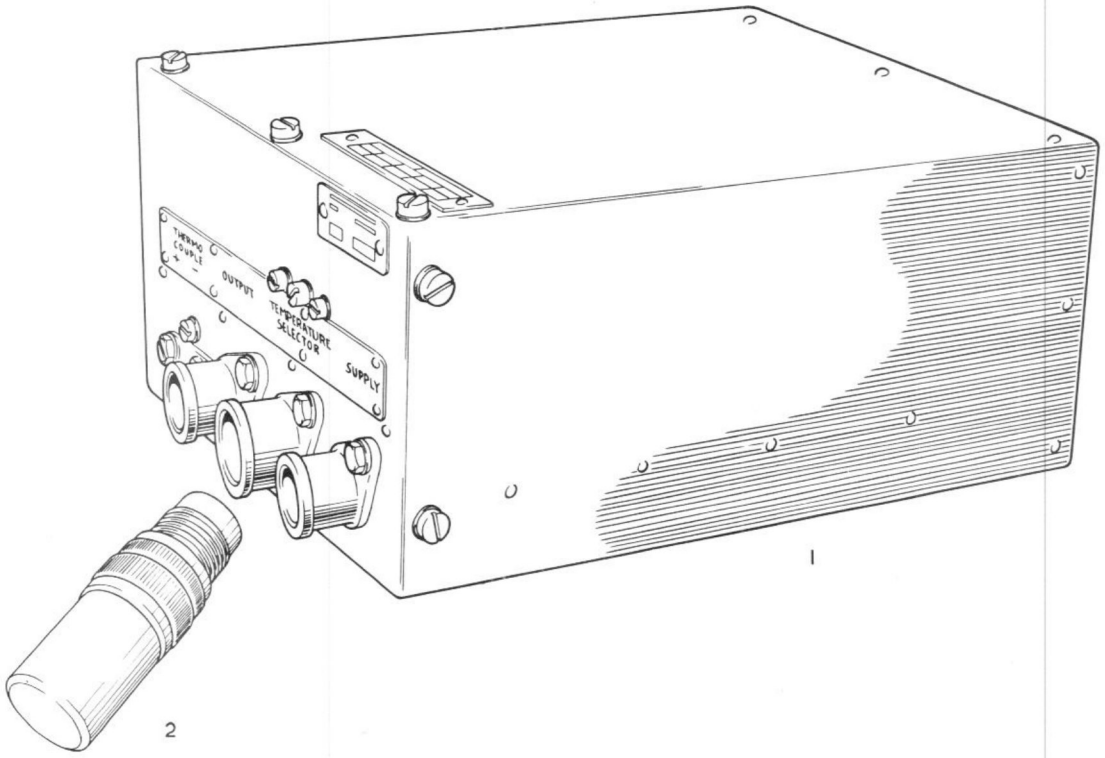

S-Av524-Ct.
S-Av525-Ct.

Figure 1 Temperature Signal Amplifier (Magnetic)

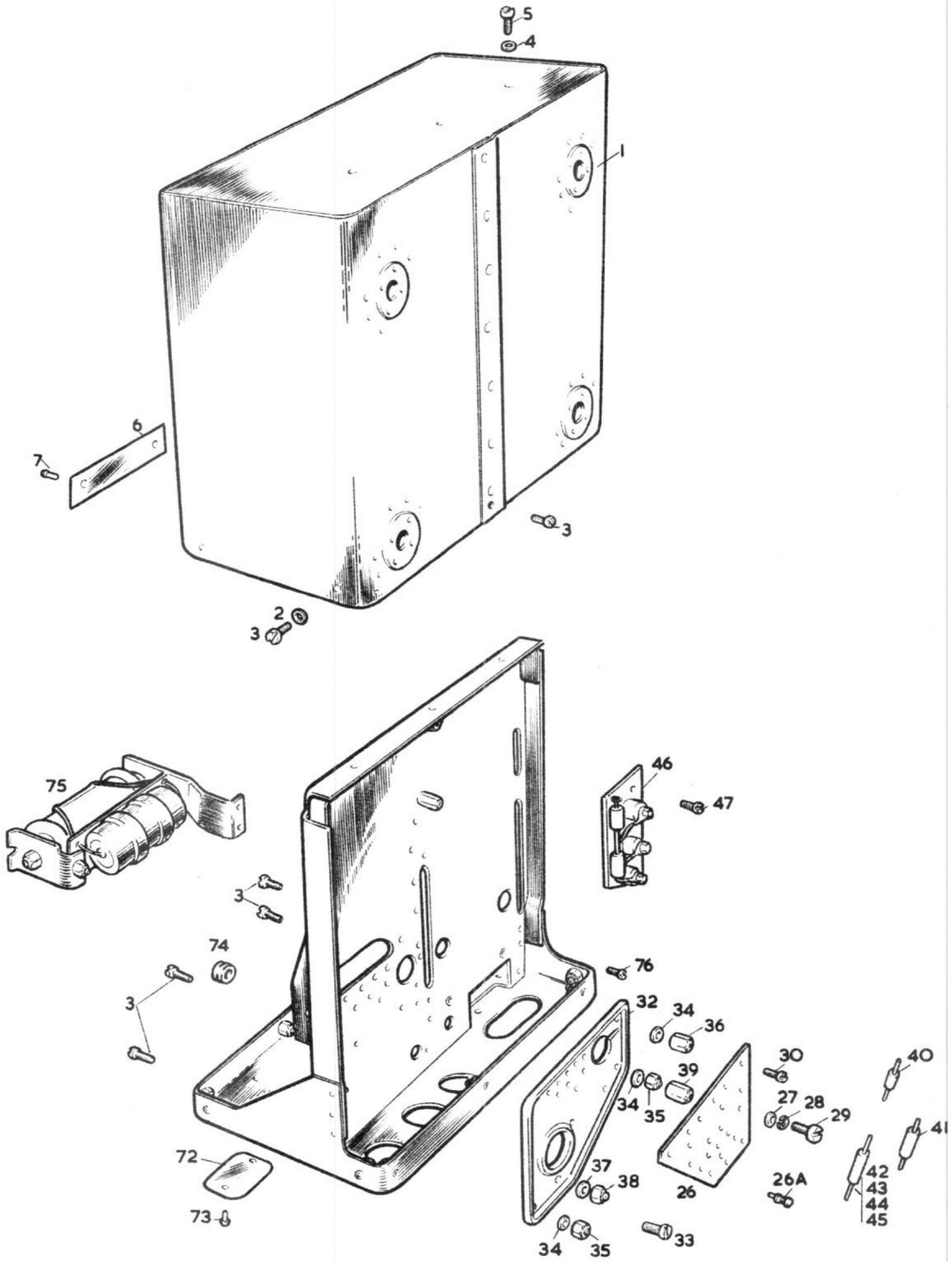

Figure 2 Temperature Signal Amplifier (Magnetic)

Printed in Scotland

S-Av524-Ct.
S-Av525-Ct.

Mar./63

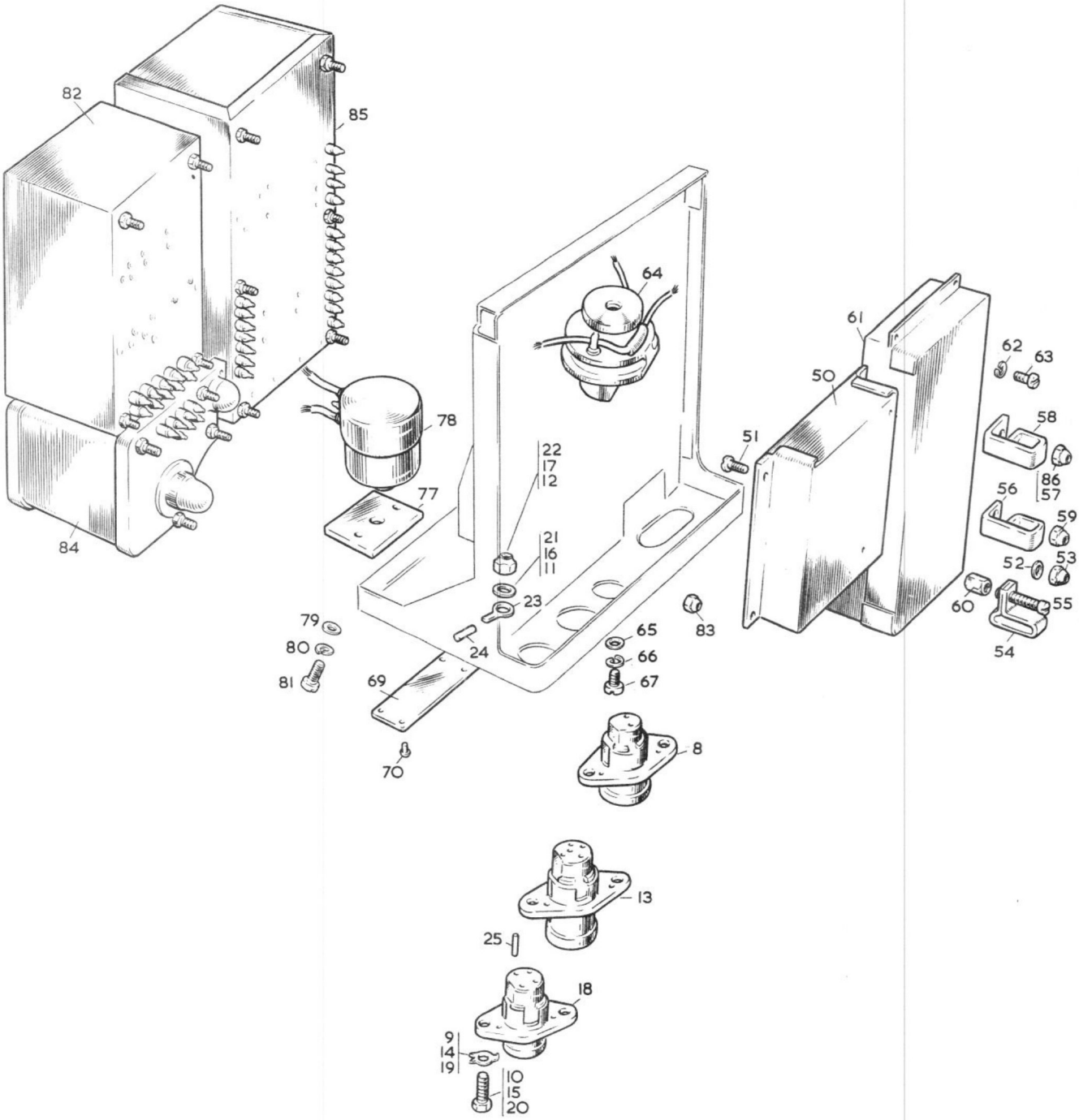

Printed in Scotland

S-Av524-Ct.
S-Av525-Ct.

Figure 3 Temperature Signal Amplifier (Magnetic)

TEMPERATURE SIGNAL AMPLIFIER (MAGNETIC)

	FIG. AND INDEX NO.	PART NUMBER	DESCRIPTION 1 2 3 4 5 6 7	MATERIAL	USAGE CODE	UNITS PER ASSY
			Modifications incorporated - 2024			
			Amplifier Assembly-Temperature Signal (Magnetic)			
	1-1	-	. Amplifier Assembly 'Smith's, No.'s 1, 2,3 or 4 Engines (For details refer to Chapter 76-4 Page 3)			1
		3700257	(EC 1/7) (Pre-Mod.2024)			
		3702693	(EC 1/7 Mod.01) (Mod.2024)			
R	1-2	3702301	. Resistor Assembly-Temperature Trimmer, 'Electronic Components' (22508/630)			1

Cont'd.

Printed in Great Britain

This page left blank intentionally

TEMPERATURE SIGNAL AMPLIFIER (MAGNETIC)

FIG. AND INDEX NO.	SMITHS PART NUMBER	DESCRIPTION 1 2 3 4 5 6 7	R.R. PART NUMBER	MATERIAL	USAGE CODE	UNITS PER ASSY
	EC1/7	LIMITER (MAGNETIC AMPLIFIER) ASSEMBLY 'SMITHS' (EC 1/7 MOD. 01)				Ref
2-1	47-870-205	. COVER ASSEMBLY	(3702435)			1
2-2	30-298-144-04	. Washer-Plain	(PP34076)			9
2-3	30-293-214-56	. Screw-Ch.hd.	(PP76042)			10
2-4	30-298-144-03	. Washer-Plain	(1101338)			3
2-5	30-293-214-40	. Screw-Ch.hd.	(1100884)			3
2-6	37-872-801-01	. Plate-Modification	(3701668)			1
2-7	30-226-101-18	. Rivet-Oval hd.	(3702210)			2
3-8	40-741-417-	. PLUG ASSEMBLY-'BREEZE' 2 PIN	(BA78744)			1
3-9	30-284-203-11	. Washer-Tab	(2708616)			2
3-10	30-237-112-11	. Screw-Hex.hd.	(3702220)			2
3-11	30-298-145-05	. Washer-Plain	(1106352)			2
3-12	30-271-744-44	. Nut-Aerotight	(3702231)			2
3-13	40-742-207	. PLUG ASSEMBLY-'BREEZE' 5 PIN	(GN24509)			1
3-14	30-248-203-11	. Washer-Tab	(2708616)			2
3-15	30-237-112-11	. Screw-Hex.hd.	(3702220)			2
3-16	30-298-145-05	. Washer-Plain	(1106352)			2
3-17	30-271-744-44	. Nut-Aerotight	(3702231)			2
3-18	40-741-811	. PLUG ASSEMBLY-'BREEZE' 4 PIN	(2801313)			1
3-19	30-284-203-11	. Washer-Tab	(2708616)			2
3-20	30-237-112-11	. Screw-Hex.hd.	(3702220)			2
3-21	30-298-145-05	. Washer-Plain	(1106352)			1
3-22	30-271-744-44	. Nut-Aerotight	(3702231)			2
2-23	30-867-304-25	. Terminal-Earthing wire	(PP68566)			1

Printed in Great Britain

S-Av
524
525
WB/1

FIG. AND INDEX NO.	SMITHS PART NUMBER	DESCRIPTION 1 2 3 4 5 6 7	R.R. PART NUMBER	MATERIAL	USAGE CODE	UNITS PER ASSY
3-24	30-867-616	. Thimble-Wire, earthing terminal	(PP53420)			1
3-25	30-867-602	. Sleeve-Wire crimping	(PP34554)			9
2-26	46-870-101-03	. PLATE ASSEMBLY-TAG	(3701675)			1
2-26A	30-867-606	. . Lug-Turret, wire connectors	(3703804)			18
2-27	30-298-144-04	. Washer-Plain	(PP34076)			3
2-28	30-282-612-25	. Washer-Spring	(3702211)			3
2-29	30-293-214-57	. Screw-Ch.hd., to reach nut	(PP34075)			3
2-30	30-293-314-40	. Screw-Csk.hd., to reach nut	(1100964)			2
2-32	36-663-102	. Plate-Stiffener, mounting tag plate	(3702436)			1
2-33	30-293-214-40	. Screw-Ch.hd., stiffening plate and rectifier unit, securing	(1100884)			4
2-34	30-298-144-03	. Washer-Plain	(1101338)			4
2-35	30-271-340-25	. Nut-Aerotight	(3702232)			2
2-36	36-361-302	. Nut-Reach	(3702438)			2
2-37	30-298-144-04	. Washer-Plain	(PP34076)			4
2-38	30-271-342-25	. Nut-Aerotight	(3702233)			1
2-39	36-361-301	. Nut-Reach	(3702437)			3
2-40	40-515-432-75	. Resistor-7.5K ohms, type RC3-L	(3702416)			1
2-41	40-526-014-27	. Resistor-270K ohms 'Paignton' type GF 5101	(3702439)			1

S-Av 524 525 Ct CQ/2

TEMPERATURE SIGNAL AMPLIFIER (MAGNETIC)

FIG. AND INDEX NO.	SMITHS PART NUMBER	DESCRIPTION 1 2 3 4 5 6 7	R.R. PART NUMBER	MATERIAL	USAGE CODE	UNITS PER ASSY
2-42	-	. Resistor-2nd Stage- Erie type 9± 5% gain of amp.				1AR
	40-524-021-12	120 ohms	(3702163)			
	40-524-021-13	130 ohms	(3702164)			
	40-524-021-15	150 ohms	(3702165)			
	40-524-021-16	160 ohms	(3702166)			
	40-524-021-18	180 ohms	(3702167)			
	40-524-021-22	220 ohms	(3702168)			
	40-524-021-27	270 ohms	(3702414)			
	40-524-021-30	300 ohms	(3702169)			
	40-524-021-33	330 ohms	(3702170)			
	40-524-021-39	390 ohms	(3702171)			
	40-524-021-43	430 ohms	(3702172)			
	40-524-021-47	470 ohms	(3702173)			
	40-524-021-51	510 ohms	(3702174)			
	40-524-921-56	560 ohms	(3702175)			
	40-524-021-62	620 ohms	(3702176)			
	40-524-021-68	680 ohms	(3702177)			
	-	. Resistor-2nd Stage,Erie type 9± 5% gain of amp.				1AR
	40-524-021-75	750 ohms	(3702178)			
	40-524-021-82	820 ohms	(3702179)			
	40-524-021-91	910 ohms	(3702180)			
	40-524-022-10	1 K ohms	(3702181)			
	40-524-022-12	1.2K ohms	(3702182)			

Printed in Great Britain

S-Av 524 525 Ct CQ/2

TEMPERATURE SIGNAL AMPLIFIER (MAGNETIC)

FIG. AND INDEX NO.	SMITHS PART NUMBER	DESCRIPTION 1 2 3 4 5 6 7	R.R. PART NUMBER	MATERIAL	USAGE CODE	UNITS PER ASSY
2-43	-	. Resistor-First Stage setting, Erie type 9+ 5%				1AR
	40-524-020-47	47 Ohms	(3702183)			
	40-524-020-56	56 ohms	(3702184)			
	40-524-020-62	62 ohms	(3702185)			
	40-524-020-68	68 ohms	(3702186)			
	40-524-020-75	75 ohms	(3702187)			
	40-524-020-82	82 ohms	(3702188)			
	40-524-020-91	91 ohms	(3702189)			
	40-524-021-10	100 ohms	(3702190)			
2-44	-	. Resistor-Calibration Point, type RWV3-J				1AR
	40-521-531-33	330 ohms	(3702191)			
	40-521-531-39	390 ohms	(3702192)			
	40-521-531-43	430 ohms	(3702193)			
	40-521-531-47	470 ohms	(3702194)			
	40-521-531-51	510 ohms	(3702195)			
	40-521-531-56	560 ohms	(3702196)			
	40-521-531-62	620 ohms	(3702197)			
	40-521-531-68	680 ohms	(3702198)			

TEMPERATURE SIGNAL AMPLIFIER (MAGNETIC)

FIG. AND INDEX NO.	SMITHS PART NUMBER	DESCRIPTION 1 2 3 4 5 6 7	R.R. PART NUMBER	MATERIAL	USAGE CODE	UNITS PER ASSY
2-45	-	. Resistor-Temperature Selector Point, Erie type 9± 5%				1AR
	40-524-022-56	5.6K ohms))	(3702199)			
	40-524-022-68	6.8K ohms))	(3702200)			
	40-524-022-75	7.5K ohms))	(3702201)			
	40-524-022-82	8.2K ohms))	(3702202)			
2-46	40-873-307-00	. UNIT ASSEMBLY-RECTIFIER	(3701671)			1
-46A	40-666-206	. . Rectifier-Type GJ6-M	(3703799)			3
-46B	40-516-643-39	. . Resistor-39K ohms, type RC7-J	(3703800)			3
2-47	30-233-285-25	. Screw-Csk., to hexagon pillars	(3702418)			2
3-50	46-873-510-00	. UNIT ASSEMBLY-REFERENCE VOLTAGE	(3703798)			1
3-51	30-293-214-40	. Screw-Ch.hd	(1100884)			4
3-52	30-298-144-03	. Washer-Plain	(1101338)			4
3-53	30-271-340-25	. Nut-Aerotight	(3702232)			4
3-54	36-614-306	. Bracket-Cable, to feed back unit	(3702415)			2
3-55	30-295-214-46	. Screw-Ch.hd.	(1100890)			2
3-56	37-614-306-02	. Bracket-Cable, to amplifier	(3701666)			1
3-57	30-271-340-25	. Nut-Aerotight	(3702232)			1
3-58	37-614-305-02	. Bracket-Cable, to amplifier	(3701665)			1
3-59	30-271-340-25	. Nut-Aerotight	(3702232)			1
3-60	37-361-201-01	. Nut-Reach, chasis to feed back unit	(3702217)			2
3-61	47-873-201-00	. Unit Assembly-Feed back	(3701673)			1
3-62	30-282-610-25	. Washer-Spring	(3702219)			2
3-63	30-293-214-39	. Screw-Ch.hd.	(PP76041)			2
3-64	47-873-401-00	. Compensator Assembly-Cold junction	(3701676)			1

Printed in Great Britain

S-Av 524 525 Ct CQ/2

FIG. AND INDEX NO.	SMITHS PART NUMBER	DESCRIPTION 1 2 3 4 5 6 7	R.R. PART NUMBER	MATERIAL	USAGE CODE	UNITS PER ASSY
3-65	30-298-144-04	. Washer-Plain	(PP34076)			2
3-66	30-282-612-25	. Washer-Spring	(3702211)			2
3-67	30-293-214-55	. Screw-Ch.hd.	(1100898)			2
-68	46-873-716-02	. Chassis Assembly	(3704648)			Ref
3-69	37-872-101-01	. Plate-Identification	(3701667)			1
3-70	30-226-102-18	. Rivet-Oval hd.	(3702215)			4
-71	30-226-854-18	. Rivet-Oval hd.	(3702216)			4
2-72	STD 170	. Plate-Name	(3703801)			1
2-73	30-226-101-18	. Rivet-Oval hd.	(3702210)			2
2-74	30-781-321	. Grommet-Cable bush	(3702234)			2
2-75	47-873-303-00	. Rectifier and capacitor assembly	(3702218)			1
2-76	30-293-214-40	. Screw-Ch.hd.	(1100884)			2
-76A	40-687-123	. . Rectifier (West: T.140-323-U.609)	(3800317)			1
3-77	35-536-101	. Plate-Spacing	(3701664)			1
3-78	46-873-718-05	. RESISTOR ASSEMBLY - VARIABLE	(3701672)			1
3-79	30-298-144-03	. Washer-Plain	(1101338)			2
3-80	30-282-610-25	. Washer-Spring	(3702219)			2
3-81	30-293-214-40	. Screw-Ch.hd.	(1100884)			2
3-82	46-873-005-00	. FIRST STAGE ASSEMBLY	(3701670)			1
3-83	30-271-340-25	. Nut-Aerotight	(3702232)			4
3-84	46-873-306-00	. UNIT ASSEMBLY-RECTIFIER (ATTACHING PARTS SEE PLATE STIFFENER)	(3702440)			1
3-85	46-873-004-00	. UNIT ASSEMBLY-AMPLIFIER	(3701669)			1
3-86	30-271-340-25	. Nut-Aerotight	(3702232)			4

~~S-Av~~
524 C
~~525~~
CQ/2

TEMPERATURE SIGNAL AMPLIFIER (MAGNETIC)

	FIG. AND INDEX NO.	SMITHS PART NUMBER	DESCRIPTION 1 2 3 4 5 6 7	R.R. PART NUMBER	MATERIAL	USAGE CODE	UNITS PER ASSY
	-87	-	. Wire-14/.0076" P.V.C. insulated, wiring components	(-)			
R		1344-302-01	White	(3100689)			32"
R		1344-302-02	Yellow	(3100690)			24"
R		1344-302-05	Pink	(3100691)			42"
R		1344-302-07	Red	(3100692)			32"
R		1344-302-09	Brown	(3100693)			12"
R		1344-302-12	Blue	(3100694)			14"
R		1344-302-15	Black	(3100695)			72"
R		1344-302-08	Orange	(3100696)			12"
R		1344-302-13	Violet	(3100697)			12"
R		1344-302-14	Grey	(3100698)			10"
	-88	1662-193	. Twine-Binding wire	(3102003)			AR

* * * * * *

Printed in Great Britain

S-Av
524 Ct
525
CQ/2