101B-0408-1

101B-0408-1

CANBERRA B(I) Mk.8

GENERAL & TECHNICAL INFO.

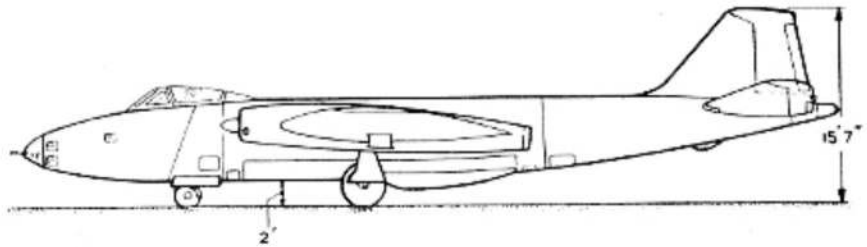

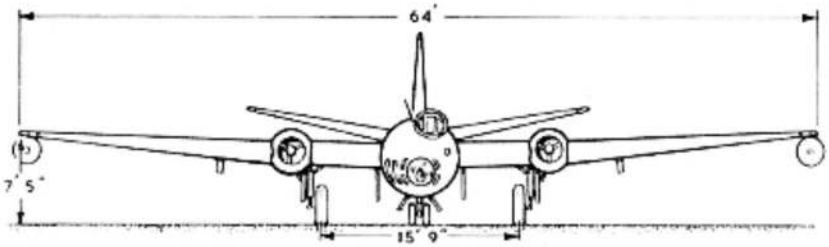

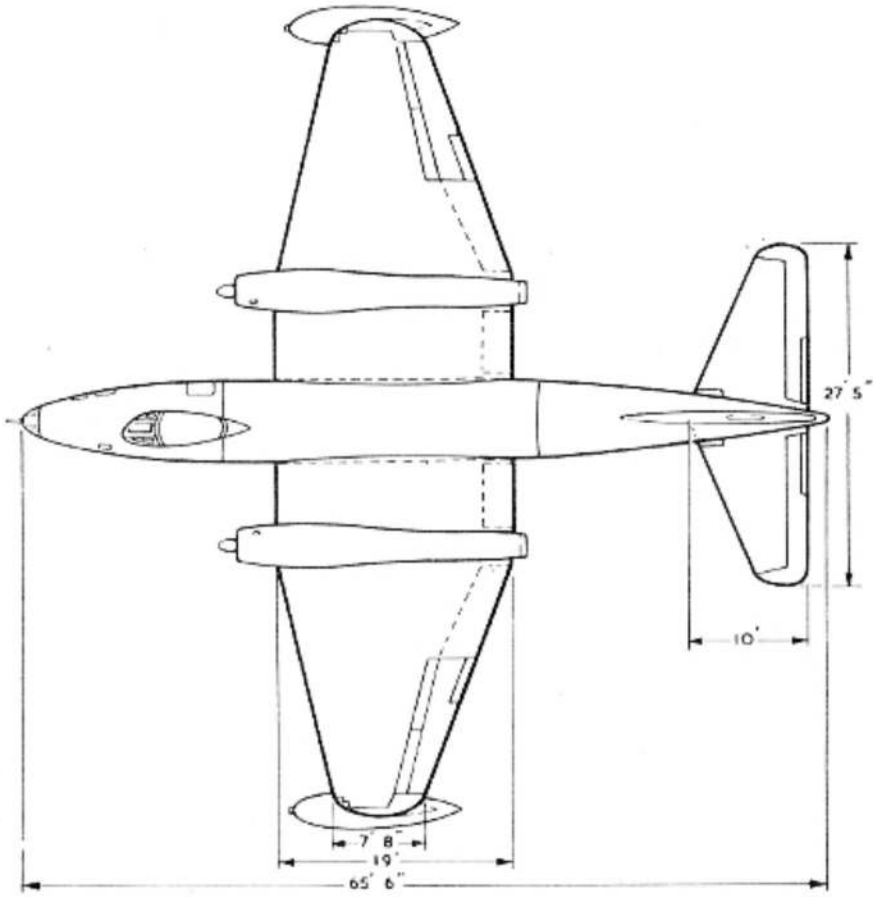

LEADING PARTICULARS

NAME	CANBERRA B(I) MK.8
TYPE	TWIN-ENGINED, JET PROPELLED, MID-WING MONOPLANE
DUTY	NIGHT INTERDICTOR/TACTICAL BOMBER
CREW	TWO

PRINCIPAL DIMENSIONS

Note...
For the main dimensions of the aircraft refer to the General Arrangement illustration. For the settings and ranges of movement of the main control surfaces, refer to Sect.3, Chap.4.

MAIN PLANE

Aerofoil section	*R.A.E./D*
Chord	
At root	*19 ft*
At tip	*7 ft 8 in*
Incidence	*2 deg*
Dihedral	
Measured on top surface of wing	*2 deg ± 10 min*
Sweep back	
At leading edge	*13 deg 33 min*
At trailing edge	*19 deg 53 min*

This file was downloaded
from the RTFM Library.

Link: www.scottbouch.com/rtfm

Please see site for usage terms,
and more aircraft documents.