CONTROLS
FLYING CONTROLS IN FORWARD FUSELAGE

Part No.	Description 1 2 3 4 5 6	No. off	Material Specification	Class of Eqpt M.R. or L.M.	Plate
-	CONTROLS, FLYING IN FORWARD FUSELAGE (EB8.45.5)	1	-	-	-
EB8.45.1193	AILERON, Bias and 2 Gear Mechanism Assembly	-	-	-	CE1/1
	Spares for:				
English Electric AE4027 Mk.2	ACTUATOR	1	-	P	CE1/2
EB8.45.1229	LEVER, aileron bias, group	1	-	-	CE2/1
EB8.45.1191	LEVER, and Aileron 2 Gear Mechanism	-	-	-	CE1/3
	Spares for:				
EB8.45.1213	ACTUATOR Assembly	1	-	-	CE1/4
	Consisting of:				
Plessey 500/1/21026/001	ACTUATOR (Mod 4833)	1	-	P	CE3/1
EB8.45.1185	FORK-END	1	-	C	CE3/2
EB8.45.1211	NUT	1	-	C	CE3/3
	Attachment of actuator to lever plate				
AGS899/2	Collar	1	-	C	CE3/4
SP113/C11	Pin, shear	1	-	C	CE3/5
SP90/C6	Pin, split	1	-	C	CE3/6
10AR/0519005	ACTUATOR, auxiliary, micro switch	1	-	C	CE3/7
Fafnir KP-21-BS	BEARING, torque tube	1	-	L	CE3/8
OR 26NB/1683	BEARING, torque tube	1	-	L	CE3/8 R
Skefko CBA2	BEARING, ball, torque tube	1	-	C	CE3/9
EB8.45.1187	PIN, slide, attachment of actuator to shackle	1	S1	C	CE3/10
EB8.00.479	PLATE, lever, c/w spool and two lever plates	1	-	C	CE3/11
EB8.45.1183	SHACKLE	1	L64	C	CE3/12
5CW/1083934	SWITCH, micro, type V.3	1	-	-	CE3/13
EB8.45.1199	TUBE, torque	1	-	C	CE1/5 CE3/14
EB8.45.1403	WASHER, slide	1	S1	C	CE3/15
EB8.45.1225	PIVOT, spring yoke	1	S96	C	CE2/2
EB8.45.1217	ROLLER, spring	4	L65	C	CE2/3
EB8.45.1205	SPINDLE, and bracket	1	-	C	CE2/4
	Attachment of spindle to structure				
A25/3C	Bolt, 2BA	2	-	C	CE2/5
A25/4C	Bolt, 2BA	3	-	C	CE2/6
A27/CS	Nut, 2BA	5	-	C	CE2/7
SP90/C8	Pin, split 1/16in. dia	5	-	C	CE2/8
SP15/C	Washer	5	-	C	CE2/9
EB8.45.1215	SPRING	2	DTD.215	C	CE2/10

CONTROLS
FLYING CONTROLS IN FORWARD FUSELAGE

Part No.	Description 1 2 3 4 5 6	No. off	Material Specification	Class of Eqpt M.R. or L.M.	Plate	
	Attachment of spring and roller					
EB8.45.1369	Bolt, 2BA	2	S94	C	CE2/11	
AGS899/2	Collar	2	-	C	CE2/12	
A27/CS	Nut, slotted, 2BA	2	-	C	CE2/13	
SP4/Y/B8	Pin, 3/16in. shackle	2	-	C	CE2/14	
SP90/C8	Pin, split 1/16in. dia	4	-	C	CE2/15	
SP15/C	Washer, 2BA	2	-	C	CE2/16	
EB8.45.1221	YOKE, spring, c/w ball bearing	2	-	C	CE2/17	
	Attachment of yoke to pivot					
A27/GS	Nut, 5/16in. BSF	4	-	C	CE2/18	
SP90/C8	Pin, split 1/16in. dia	4	-	C	CE2/19	
SP15/G	Washer 5/16in.	8	-	C	CE2/20	
-	CONTROL, Column Installation (EB8.45.497)	-	-	-	CE1/6	
EB8.45.495	COLUMN, Control, Group, Less Handwheel (Pre Mod 5137)	1	-	P	CE2/21	
EB8.45.495x15	COLUMN, Control, Group, Less Handwheel (Mod 5137 Pre Mod 5000 ALT/SB/9/020)	1	-	P	CE2/22	
EB8.45.1870	COLUMN, Control Group, Less Handwheel (Mod 5000 ALT/SB/9/020)	1	-	P	CE2/23	
	Spares for:					
EB8.45.1125	ATTACHMENT end torsion bar (Pre Mod 5000 ALT/SB/9/020)	1	S95	C	CE2/24	
EB8.45.1874	ATTACHMENT end torsion bar (Mod 5000 ALT/SB/9/020)	1	-	-	CE2/25	
EB8.45.1773	BAR, torsion (SA4887 Pre Mod 5000 ALT/SB/9/020)	1	S99	MR	CE2/26	
EB8.45.1871	BAR, torsion (Mod 5000 ALT/SB/9/020)	1	-	-	CE2/27	
	Attachment of bar to end attachment					
SP28/K8	Pin, taper (Pre Mod 5000 ALT/SB/9/020)	1	-	C	CE2/28	
SP38/K16	Pin, taper (Pre Mod 5000 ALT/SB/9/020)	1	-	C	CE2/29	
SP28/L8	Pin, taper (Pre Mod 5000 ALT/SB/9/020)	1	-	C	CE2/30	
SP28/L16	Pin, taper (Pre Mod 5000 ALT/SB/9/020)	1	-	C	CE2/31	
Hoffman T17	BEARING, ball	1	-	C	CE2/32	R
Hoffman T25	BEARING, ball	1	-	C	CE2/33	R
EA1.45.1153	BOLT, elevator control mounting	1	S11	C	CE2/34	
EA1.45.107	BUSH	1	L40	C	CE2/35	
EB8.45.565	COLUMN Assembly Control	1	-	L	-	

CONTROLS
FLYING CONTROLS IN FORWARD FUSELAGE

Part No.	Description (1 2 3 4 5 6)	No. off	Material Specification	Class of Eqpt M.R. or L.M.	Plate
	Spares for:				
EB8.45.567	CASTING top (Pre SA5368)	1	-	-	-
EB8.45.1833	CASTING, top (SA5368)	1	-	-	-
EA1.45.91	YOKE (Pre SA 4912)	1	-	-	-
EB8.45.1831	YOKE (SA 4912)	1	L65	-	-
EB8.45.491	CONTROL, Elevator Assembly	1	-	L	CE1/7
	Spares for:				
Hoffman T33	BEARING, ball	1	-	C	CE1/8 R
EA1.45.175	HOUSING, ball bearing	1	L45	C	CE1/9
	Attachment of housing to diaphragm				
AS2230/405	Rivet, 1/8in.	8	-	C	CE1/10
EB8.45.517	DIAPHRAGM	1	L72	MR	CE1/11
EB8.45.483	LEVER, Assembly	1	-	C	CE1/12
	Spares for:				
EB8.45.1273	LEVER, snatch	1	-	C	CE1/13
	Attachment of snatch lever to control lever				
A25/4C	Bolt, 2BA	6	-	C	CE1/14
A27/CP	Nut, 2BA	6	-	C	CE1/15
EB8.45.489	Washer, profile	2	-	-	CE1/16
SP15/C	Washer, 2BA	4	-	C	CE1/17
	Attachment of lever to elevator control				
EEAS37/14A	Nipple, 1/4in. dia.	6	S11	C	CE1/18
EEAS38/2A	Spoke, 4BA (Make from Ref. 28R/6124)	3	S11	LM	CE1/19
EA1.45.105	SOCKET, end	1	L40	C	CE2/36
	Attachment of socket to tube				
EEAS37/14A	Nipple, 1/4in. dia.	6	S11	C	CE2/37
EEAS38/2A	Spoke, 4BA (Make from Ref.28R/6124)	3	S11	LM	CE2/38
EB8.45.493	TUBE	1	L62	MR	CE2/39
-	COVER, Dust, Base of Control Column Assembly (EB8.45.1393)	-	-	-	-
	Spares for:				
EB8.45.1395	COVER, dust	1	DTD.790	C	CE1/20
EB8.45.1397	RING, sealing lower	1	DTD.180C	C	CE2/40
EB8.45.1399	RING, sealing, elevator, control bearing, outer	1	DTD.180C	C	CE1/21
EB8.45.1401	RING, sealing, elevator, control bearing inner	1	DTD.180C	C	CE1/22
EB8.45.1393/5	SEAL, felt (Make from 32B/952)	1	DTD.590	LM	-
EB8.45.1873	FITTING, end (Mod 5000 ALT/SB/9/020)	1	-	C	-
EB8.45.573	FORK-END (Pre Mod 5000 ALT/SB/9/020)	1	-	C	

CONTROLS
FLYING CONTROLS IN FORWARD FUSELAGE

Part No.	Description 1 2 3 4 5 6	No. off	Material Specification	Class of Eqpt M.R. or L.M.	Plate
EB8.45.1872	FORK-END (Mod 5000 ALT/SB/9/020)	1	–	C	–
EA6.45.265	HOUSING, bearing	1	S11	C	CE2/41
EA6.45.269	NUT, clamp	1	DTD.683	C	CE2/42
EA6.45.271	NUT, clamp	1	DTD.683	C	CE2/43
ES6.45.263	NUT, clamp	1	DTD.683	C	CE2/44
EB8.45.1877	PIN, retaining (Mod 5000 ALT/SB/9/020)	1	–	C	–
SP78/C6	PIN, split (Mod 5000 ALT/SB/9/020)	1	–	C	–
EA6.45.273	PLATE, cover, bearing	1	DTD.683	LM	CE2/45
	Attachment of plate to casting				
A33/C16	Screw, 2BA	4	–	C	CE2/46
EEAS27/8/4	Shim	4	–	C	CE2/47 R
EA9.45.105	PLATE, cover, end	1	DTD610	–	CE2/48
	Attachment of plate to casting				
EEAS1/1C	Screw, 2BA	4	–	C	CE2/49
EA9.45.281	PLATE, cover, top	1	DTD610	C	CE2/50
	Attachment of plate to column				
A31/B12	Screw, 4BA	4	–	C	CE2/51
SP47/B	Washer, spring, 4BA	4	–	C	CE2/52
EA1.45.153	PLATE, cover, side	2	DTD390	C	CE2/53
	Attachment of plate to elevator control				
A31/B12	Screw, 4BA	2	–	C	CE2/54
SP47/B	Washer, spring, 4BA	2	–	C	CE2/55
EB8.45.1127	PLUG, torsion bar (Pre Mod 5000 ALT/SB/9/020)	1	–	C/MR	CE2/56
EB8.45.1133	SCREW, 2BA	2	–	C	CE2/57
EB8.45.1391	SPHERE AND FORK-END, group	1	–	C	CE2/58
EB8.45.569	TUBE, Inner, Assembly (Pre Mod 5000 ALT/SB/9/020)	1	–	C	
EB8.45.1875	TUBE, Inner Assembly (Mod 5000 ALT/SB/9/020)	1	–	C	–
	Spares for:				
Hoffman T29	BEARING, ball (Mod 5000 ALT/SB/9/020)	1	–	C	–
EB8.45.577	PINION AND QUADRANT (Supplied as set wired together) (Mod 5000 ALT/SB/9/020)	1	–	C	
	Consisting of:				
EB8.45.1377	PINION, Control column (Mod 5000 ALT/SB/9/020)	1	–	C	–
EB8.45.1379	QUADRANT (Mod 5000 ALT/SB/9/020)	1	–	C	–
EB8.45.1876	TUBE, driving (Mod 5000 ALT/SB/9/020)	1	–	C	–
EA2.45.413	WASHER, laminated	1	L.A.	C	CE2/59
EB8.45.1569	WASHER	1	S96	C	CE2/60
Dunlop AC.61580	WHEEL, pilot's control (Not supplied with control column group Ref. No. 14138) For spares see AP113D-1612	1	–	P	CE2/61

CONTROLS
FLYING CONTROLS IN FORWARD FUSELAGE

Part No.	Description 1 2 3 4 5 6	No. off	Material Specification	Class of Eqpt M.R. or L.M.	Plate	
	Attachment of control wheel to column					
AS1242/8C	Bolt, 2BA	3	H.T.S.	C	CE2/62	R
AGS2002/C1	Nut, 2BA	3	-	C	CE2/63	R
EEAS1/1C	Screw, 2BA	4	-	C	CE2/64	R
EA9.45.541	COVER, sealing, complete	1	-	C	CE1/23	
EB8.45.1209	LEVER, Aileron Bias Actuator Assy.	-	-	MR	CE2/65	
	Spares for:					
EB8.45.1223	PIVOT, spring yoke	1	S96	C	CE2/66	
EB8.45.1221	YOKE, spring, c/w ball bearing	1	-	C	CE2/67	
	Attachment of pivot to yoke					
A27/GS	Nut, 5/16in. BSF	2	-	C	CE2/68	
SP90/C8	Pin, split 1/16in. dia.	2	-	C	CE2/69	
SP15/G	Washer, 5/16in.	2	-	C	CE2/70	
-	LEVERS, Control on Pressure Bulkhead (EB8.45.15)	-	-	-	-	
EB8.45.255	BEAM, Stop, Assembly	1	-	C	-	
	Spares for:					
EB8.45.1371	STOP, elevator control	1	S95	C	CE1/24	
EB8.45.1411	STOP, aileron control (Mod 3334)	1	S92	C	CE1/25	
	Attachment of stop to beam					
A27/JT	Nut, thin 3/8in. BSF	1	-	C	CE1/26	
EB8.45.1621	BUSH	3	S96	C	-	
EA2.45.233	GASKET, stop beam	1	-	C	CE1/27	
EB8.45.1135	LEVER Control Assembly	1	-	L	CE1/28	
	Spares for:					
EA1.45.367	DOWEL, between upper and lower levers	3	S1	C	CE1/29	
EA1.45.349	HOUSING, lever	1	DTD289	C	CE1/30	
EA2.45.235	LEVER, aileron, upper	1	-	L	CE1/31	
EB8.45.1539	LEVER, rudder, upper (Mod 3266)	1	DTD5054	L	CE1/32	
EA2.45.237	LEVER, elevator, upper	1	-	L	CE1/33	
EA2.45.239	LEVER, rudder or elevator, lower	2	-	L	CE1/34	
EA2.45.241	LEVER, elevator, lower	1	-	L	CE1/35	
	Attachment of levers to housing					
EEAS13/2	Bolt, 1/4in. BSF	12	-	C	CE1/36	
AGS2002/E1	Nut, 1/4in. BSF	12	-	C	CE1/37	
SP15/E	Washer, 1/4in.	12	-	C	CE1/38	
EA1.45.355	RING, sealing, aileron levers	1	L45	C	CE1/39	
EA1.45.353	RING, sealing, rudder levers	1	L45	C	CE1/40	
EA1.45.351	RING, sealing, elevator levers	1	L45	C	CE1/41	
EB8.45.1697	LEVER, Elevator Assembly	1	-	-	CE1/42	

CONTROLS
FLYING CONTROLS IN FORWARD FUSELAGE

Part No.	Description 1 2 3 4 5 6	No. off	Material Specification	Class of Eqpt M.R. or L.M.	Plate
	Spares for:				
Fafnir B543DD	BEARINGS, ball	2	–	C	–
EB8.45.1699	HOUSING, ballrace	2	L45	P	–
EB8.45.1703	LEVER, assembly	1	DTD5024	MR	–
EEAS37/8A	NIPPLE, 1/4in. dia.	4	–	C	–
EEAS38/2A	SPOKE, 4 BA (Make from 28R/6124)	2	–	LM	–
EB8.45.1701	STUB, Shaft Assembly	1	–	MR	–
	Spares for:				
EB8.45.1709	LEVER Assembly	1	–	MR	–
	Spares for:				
EB8.45.1583	HOUSING and bearing	1	–	C	–
EB8.46.313	LEVER Assembly	1	–	–	–
	Spares for:				
EB8.46.313/C	WEIGHT, mass balance	1		–	–
EB8.45.1661	PIECE, distance	3	S96	C	–
EB8.45.1573	TORQUE SHAFT, Assembly	1	–		CE1/43
	Spares for:				
EB8.45.1625	SHAFT, Aileron Torque Assembly	1	–	–	CE1/44
	Spares for:				
Fafnir KP47BS	BEARING, ball	2	–	C	CE1/45
Anderton S075M	CIRCLIP, 1400-75M	2	–	C	–
Anderton B0412	CIRCLIP, 1300-4 1/8	1	–	C	–
EB8.45.1643	LEVER, c/w ball bearing	1	–	L	CE1/46
	Spares for:				
EB8.45.1639	HOUSING and bearing	1	–	C	CE1/47
	Attachment of lever to shaft				
A30/5C	Bolt, 2BA	8	–	C	CE1/48
A27/CS	Nut, slotted 2BA	8	–	C	CE1/49
SP90/C6	Pin, split 1/16 in. dia.	8	–	C	CE1/50
SP15/C	Washer, 2BA	8	–	C	CE1/51
EB8.45.1645	LEVER, c/w ball bearing	1	–	L	CE1/52
	Spares for:				
EB8.45.1583	HOUSING and bearing	1	–	C	CE1/53
	Attachment of lever to shaft				
A30/4C	Bolt, 2BA	8	–	C	CE1/54
A27/CS	Nut, slotted, 2BA	8	–	C	CE1/55

CONTROLS
FLYING CONTROLS IN FORWARD FUSELAGE

Part No.	Description 1 2 3 4 5 6	No. off	Material Specification	Class of Eqpt M.R. or L.M.	Plate
SP90/C6	Pin, split, 1/6in. dia.	8	-	C	CE1/56
SP15/C	Washer, 2BA	8	-	C	CE1/57
EB8.45.1627	SHAFT, Rudder Torque Assembly	1	-	MR	CE1/58
	Spares for:				
Fafnir KP25BS	BEARING, ball	1	-	C	CE1/59
Anderton S0156	CIRCLIP, 1400-1 9/16in.	1	-	C	-
EB8.45.1647	LEVER, c/w ball bearing	1	-	L	CE1/60
	Spares for:				
EB8.45.1639	HOUSING and bearing	1	-	C	CE1/61
	Attachment of lever to shaft				
A30/5C	Bolt, 2BA	8	-	C	CE1/62
A27/CS	Nut, slotted, 2BA	8	-	C	CE1/63
SP90/C6	Pin, split, 1/16in. dia.	8	-	C	CE1/64
SP15/C	Washer, 2BA	8	-	C	CE1/65
EB8.45.1641	SHAFT, Rudder Stub Assembly	1	-	MR	CE1/66
	Spares for:				
Fafnir KP25BS	BEARING, ball	1	-	C	CE1/67
Anderton S0156	CIRCLIP, 1400-1 9/16in.	1	-	C	-
Anderton B0250	CIRCLIP, 1300-2 1/2in.	1	-	C	-
EB8.45.1649	LEVER, c/w ball bearing	1	-	-	CE1/68
	Spares for:				
EB8.45.1583	HOUSING and bearing	1	-	C	CE1/69
	Attachment of lever to shaft				
A30/4C	Bolt, 2BA	8	-	C	CE1/70
A27/CS	Nut, slotted 2BA	8	-	C	CE1/71
SP90/C6	Pin split, 1/16in. dia.	8	-	C	CE1/72
SP15/C	Washer, 2BA	8	-	C	CE1/73
	Attachment of stub shaft to torque shaft				
EEAS37/14A	Nipple	6	S11	C	CE1/74
EEAS38/2A	Spoke, (Make from Ref 28R/6124)	3	S11	LM	CE1/75
EB8.45.1633	TUBE, control, complete (Pre Mod 4930)	2	-	L	CE1/76
EB8.45.1789	TUBE, control, complete (Mod 4930 Pre Mod 5473)	2	-	-	CE1/77
EB8.45.1847	TUBE, control complete (Mod 5473)	2	-	-	CE1/78
EB8.45.1631	TUBE, control, complete (Pre Mod 4930)	1	-	L	CE1/79
EB8.45.1787	TUBE, control, complete (Mod 4930 Pre Mod 5473)	1	-	-	CE1/80

CONTROLS
FLYING CONTROLS IN FORWARD FUSELAGE

Part No.	Description 1 2 3 4 5 6	No. off	Material Specification	Class of Eqpt M.R. or L.M.	Plate
EB8.45.1845	TUBE, control, complete (Mod 5473)	1		–	CE1/81
	Spares for:				
EB8.45.1630	FITTING, adjuster	2	DTD5054	C	–
EEAS128	FITTING, end	2	–	C	–
EEAS37/13A	NIPPLE, 3/16in. dia.	20	–	C	–
A27/NP	Nut, 1/2in. BSF	2	–	C	–
AGS2047/609	PIN, sealing	4	–	C	–
AGS2045/609	RIVET, 3/16in. dia. dome hd.	4	–	C	–
EEAS38/1A	SPOKE, (Make from 28R/6123)	10	–	LM	–
	Attachment of tubes to levers				
EEAS13/1	Bolt, 1/4in. BSF	4	HTS	C	CE1/82
EEAS14	Bush, spacing	4	S11	C	CE1/83
EEAS63/E	Nut, 1/4in. BSF	4	S96	C	CE1/84
EEAS127	Piece, distance	4	S96	C	CE1/85
SP90/C8	Pin, split 1/16in. dia.	4	–	C	CE1/86
–	PEDALS, Rudder Installation (EB8.45.501)	–	–	–	CE1/87
	Spares for:				
EA3.45.57	BEARING, c/w housing and ball bearing	1	–	L	CE3/16
	Attachment of bearing to structure				
SP80/506	Rivet, 5/32in.	8	–	C	CE3/17
EB8.45.1129	LEVER, operating	1	–	L	CE1/88
	Attachment of lever to spindle				
EEAS95/16J	Bolt, 3/8in. BSF	2	H.T.S.	C	CE1/89
A27/JT	Locknut, 3/8in. BSF	2	–	C	CE1/90
SP90/C5	Pin, split	2	–	C	CE1/91
SP13/J	Washer	2	–	C	CE1/92
AS1903/J12	Washer, saddle	4	–	C	CE1/93
EA9.45.477	PEDALS and Rudder Bar Assembly (Pre Mod 4802)	1	–	P	CE1/94
EB8.45.1770	PEDALS and Rudder Bar Assembly (Mod 4802)	1	–	P	CE1/95
	Spares for:				
AS2206	BAR, link assembly	2	–	C	CE3/18
Hoffman T21	BEARING, ball	1	–	C	CE3/19 R
AS2196	BOLT, pivot	4	S110	C	CE3/20
AS2202	BOLT, pivot	4	S110	C	CE3/21
AS2208	BOLT, pedal	2	S110	C	CE3/22
AS2180	BUSH, adjusting worm	1	B8	C	CE3/23
AS2226	BUSH, bearing retaining	1	B8	C	CE3/24
AS2211	BUSH, pedal pivot	4	B8	C	CE3/25
EA9.45.483	CLAMP, hose single	2	LFS26	C	CE3/26
EA9.45.629	COLLAR, aft	1	S1	C	CE3/27

CONTROLS
FLYING CONTROLS IN FORWARD FUSELAGE

Part No.	Description 1 2 3 4 5 6	No. off	Material Specification	Class of Eqpt M.R. or L.M.	Plate	
	Attachment of collar to adjusting worm					
SP29/H12	Pin, taper	1	-	C	CE3/28	
EA9.45.479	COUPLING, 90 deg. pipe	2	DTD683	C	CE3/29	
EA9.45.471	HEEL REST, assembly, Port	1	-	MR	CE3/30	
EA9.45.472	HEEL REST, assembly stbd	1	-	MR	CE3/31	
	Attachment of heel rests to bar					
AS1248/4C	Bolt, 2BA, outboard side	4	-	C	CE3/32	
AS1248/5C	Bolt, 2BA, inboard side	4	-	C	CE3/33	
AGS2001/C1	Nut, 2BA	8	-	C	CE3/34	
SP15/C	Washer, 2BA	8	-	C	CE3/35	
SP21	NIPPLE, lubricating	2	-	C	CE3/36	
Dunlop AH030411/15 OR	HOSE, flexible	2	-	C	CE3/37	R R
Dunlop 2/1212/A/700/8/8	HOSE, flexible (Pt. No.2/1212/A/700/8/8/15)	2	-	C	CE3/37	R
AS2231	LINK, adjusting worm	4	DTD171	C	CE3/38	
AS2197	NUT, pivot bolt	4	S110	C	CE3/39	
AS2224	NUT, cap, spindle	1	S110	C	CE3/40	
EA9.45.609	PEDAL, Foot and Brake Gear (Port)	1	-	P	CE3/41	
EA9.45.610	PEDAL, Foot and Brake Gear (Stbd)	1	-	P	CE3/42	
	Spares for:					
EA9.45.711	BOX, Spring Group	2	-	L	CE3/43	
	Spares for:					
EA9.45.723	PEDAL, foot	2	L64	MR	CE3/44	
EA9.45.719	SPRING, long	2	DTD215	MR	CE3/45	
EA9.45.721	SPRING, small	2	DTD215	MR	CE3/46	
Dunlop ACM18986	CYLINDER, Master (Port) (For Spares see AP4515C, Vol.3, Pt.1, Sect.2, Chap. 37)	1	-	P	CE3/47	
Dunlop ACM18988	CYLINDER, Master (Stbd) (For spares see AP4515C, Vol.3, Pt.1, Sect.2, Chap. 37)	1	-	P	CE3/48	
SP21	NIPPLE, lubricating	2	-	C	-	R
Aero Controls AC3619	LEVER, brake (Port)	1	-	MR	-	
Aero Controls AC3620	LEVER, brake (stbd)	1	-	MR	-	
Aero Controls AC3612	LEVER, brake	2	-	MR	-	
Aero Controls AC3602	LEVER, stop	2	-	MR	-	
Aero Controls AC3618	SETSCREW, travel adjustment	2	S1	MR	-	
Aero controls AC3616	SCREW, for screwed stop	2	S96	MR	-	

CONTROLS
FLYING CONTROLS IN FORWARD FUSELAGE

Part No.	Description 1 2 3 4 5 6	No. off	Material Specification	Class of Eqpt M.R. or L.M.	Plate	
Aero Controls AC3605	SHOE (Port)	1	Casting	MR	–	
Aero Controls AC3606	SHOE (Stbd)	1	Casting	MR	–	
Aero Controls AC3613	SPINDLE, shoe	2	–	MR	–	
Aero Controls AC3603	SPINDLE, pivot, master cylinder	2	–	C	–	
Aero Controls AC3617	STOP, screwed	2	S1	MR	–	
Aero Controls AC3611	STUD, pivot	2	S96	MR	–	
Aero Controls AC3604	TUBE, spacing, master cylinder attachment	2	–	C	–	
Aero Controls AC3607	WASHER, spacing, shoe spindle	2	DTD423B	MR	–	
Aero Controls AC3608	WASHER, spacing shoe spindle	2	DTD423B	MR	–	
AS2210	PIECE, distance	4	S110	C	CE3/49	
AS2181	SHIM, packing	1	–	C	–	
EB8.45.1775	WHEEL, adjusting (m/f Ref. 12072)	1	–	–	CE3/50	
EB8.45.515	SNATCH UNIT Assembly	1	–	–	CE1/96	
	Spares for:					
Martin Baker MBCJ/473	SNATCH UNIT	1	–	P	CE1/97	
	Attachment of unit to lever					
EB8.45.521	Bolt, 1/4in. BSF	1	HTS	C	CE1/98	
AGS2001/E1	Nut, 1/4in. BSF	1	–	C	CE1/99	
EB8.45.523	Tube, distance	1	S95	C	CE1/100	
SP13/E	Washer, 1/4in.	1	–	C	CE1/101	
Short & Harland 3500X1	STRUT, Elevator Break (Pre Mod 4383)	1	–	P	CE1/102 CE3/51	
Short & Harland 3500x2	STRUT, Elevator Break (Mod 4383)	1	–	P	CE1/103 CE3/52	
	Spares for:					
Ransomes XLT12	BEARING, single thrust	1	–	C	CE3/53	R
Ransomes XLT15	BEARING, single thrust	1	–	C	CE3/54	R
A26/3B	BOLT 4BA	1	–	C	CE3/55	
Short & Harland 350014	FORK-END (Pre Mod 4383)	1	L64	C	CE3/56	
Short & Harland 350031	FORK-END (Mod 4383)	1	–	C	CE3/57	
Short & Harland 350015	FORK-END, adjusting	1	L64	C	CE3/58	
Short & Harland 350030	INDICATOR	1	S3	C	CE3/59	

CONTROLS
FLYING CONTROLS IN FORWARD FUSELAGE

Part No.	Description 1 2 3 4 5 6	No. off	Material Specification	Class of Eqpt M.R. or L.M.	Plate	
Short & Harland 350001	JOINT, swivel c/w bearing assembly	2	–	C	CE3/60	
Ermeto Co. Ltd S574-HC	NUT & SLEEVE assy	1	–	–	CE3/61	
	Attachment of nut & sleeve					
AGS1138/C	Washer, jointing	1	–	C	CE3/62	
SP21	NIPPLE, lubricating	1	–	C	CE3/63	R
Short & Harland 350024	NUT, internal	1	L64	C	CE3/64	
A105/JS	NUT	1	–	C	CE3/65	
A110/ES	NUT	2	–	C	CE3/66	
Short & Harland 350026	PIN, shear	2	L64	C	CE3/67	
SP90/C7	PIN, split	3	–	C	CE3/68	
Short & Harland 350018	PISTON	1	S96	C	CE3/69	
Short & Harland PD166/B7	Screw, grub	1	S1	C	CE3/70	R
Short & Harland 350016	SPINDLE	1	–	C	CE3/71	
Short & Harland 350029	SPRING	1	DTD215	C	CE3/72	
Short & Harland 350025	SUPPORT, indicator	1	L64	C	CE3/73	
Short & Harland 350028	WASHER	1	L64	C	CE3/74	
SP15/E	WASHER	2	–	C	CE3/75	
AGS2035/B	WASHER	1	–	C	CE3/76	
	Attachment of strut to levers					
EB8.45.511	Bolt, 1/4in. BSF (2 off Pre Mod 5001)	1	S96	C	CE1/104	
A11217/E	Bolt, 1/4in. UNF (Mod 5001)	1	–	C	CE1/105	
EEAS37/14A	Nipple 1/4in. dia.	2	S11	C	CE3/77	
A27/ES	Nut, 1/4in. BSF (2 off Pre Mod 5001)	1	–	C	CE1/106	
A110/ES	Nut, 1/4in. UNF (Mod 5001)	1	–	C	CE1/107	
SP90/C8	Pin, split 1/16in. dia.	2	–	C	CE1/108	
EEAS38/2A	Spoke, 4BA (Make from ref. 28R/6124)	1	S11	LM	CE3/78	
SP13/E	Washer, 1/4in.	2	–	C	CE1/109	
EB8.45.1637	TUBE, Rudder, Control Group (Pre Mod 4930)	1	–	L	CE1/110	
EB8.45.1779	TUBE, Rudder Control Group (Mod 4930 Pre Mod 5473)	1	–	–	CE1/111	
EB8.45.1837	TUBE, Rudder Control Group (Mod 5473)	1	–	–	CE1/112	
	Spares for:					
EB8.45.1629	FITTING, adjuster	1	DTD5054	C	–	
EB8.45.1169	TUBE, Aileron Control Group (Pre Mod 4930)	1	–	L	CE1/113	
EB8.45.1807	TUBE, Aileron Control Group (Mod 4930 Pre Mod 5473)	1	–	–	CE1/114	
EB8.45.1859	TUBE, Aileron Control Group (Mod 5473)	1	–	–	CE1/115	

CONTROLS
FLYING CONTROLS IN FORWARD FUSELAGE

Part No.	Description 1 2 3 4 5 6	No. off	Material Specification	Class of Eqpt M.R. or L.M.	Plate
	Spares for:				
EB8.45.215	FITTING, adjuster	1	DTD5054	C/MR	CE1/116
	Attachment of fitting to tube				
A29/NP	Nut, 1/2in. BSF	1	-	C	CE1/117
	Attachment of tubes to levers				
EB8.45.507	Bolt, 5/16in. BSF	2	S96	C	CE1/118
EEAS13/1	Bolt	2	S96	C	CE1/119
EEAS14	Bush, spacing	2	S11	C	CE1/120
EEAS63/E	Nut, spacing	2	S96	C	CE1/121
A27/GS	Nut, 5/16in. BSF	2	-	C	CE1/122
EB8.45.1619	Piece, distance	4	S96	-	CE1/123
EEAS127	Piece, distance	2	S96	C	CE1/124 R
SP90/C8	Pin, split, 1/16in. dia.	4	-	C	CE1/125
SP13/G	Washer	2	-	C	CE1/126
EB8.45.1167	TUBE, Aileron Control Group (Pre Mod 4930)	1	-	L	CE1/127
EB8.45.1809	TUBE, Aileron Control Group (Mod 4930 Pre Mod 5473)	1	-	-	CE1/128
EB8.45.1861	TUBE, Aileron Control Group (Mod 5473)	1	-	-	CE1/129
	Spares for:				
EEAS170 Mk.2	FITTING, adjuster	1	-	C	CE2/71
	Attachment of fitting to tube				
A29/NP	Nut, 1/2in. BSF	1	-	C	CE2/72
	Attachment of tube to levers				
EEAS13/1	Bolt, 1/4in. BSF	2	S96	C	CE2/73
EEAS14	Bush, spacing	2	S11	C	CE2/74
EEAS63/E	Nut, 1/4in. BSF	2	S96	C	CE2/75
EEAS127	Piece, distance	2	S96	C	CE2/76
SP90/C8	Pin, split, 1/16in. dia.	2	-	C	CE2/77
EB8.45.1543	TUBE, Rudder Control Group (Pre Mod 4930)	1	-	L	CE1/130
EB8.45.1777	TUBE, Rudder Control Group (Mod 4930 Pre Mod 5473)	1	-	-	CE1/131
EB8.45.1835	TUBE, Rudder Control Group (Mod 5473)	1	-	-	CE1/132
	Spares for:				
EEAS47/2	FITTING, adjuster	1	-	C	CE1/133
	Attachment of fitting to tube				
A29/NP	Nut, 1/2in. BSF	1	-	C	CE1/134
EA2.45.545	TUBE, Aileron and Elevator Control (Pre Mod 4930)	2	-	L	CE1/135
EA2.45.871	TUBE, Aileron and Elevator Control (Mod 4930 Pre Mod 5473)	2	-	L	CE1/136

CONTROLS
FLYING CONTROLS IN FORWARD FUSELAGE

Part No.	Description 1 2 3 4 5 6	No. off	Material Specification	Class of Eqpt. M.R. or L.M.	Plate	
EA2.45.897	TUBE, Aileron and Elevator control (Mod 5473)	2	-	L	CE1/137	R
	Attachment of tubes to levers					
EEAS13/1	Bolt, 1/4in. BSF	4	S96	C	CE1/138	R
EEAS14	Bush, spacing	4	S11	C	CE1/139	R
EEAS63/E	Nut, 1/4in. BSF	4	S96	C	CE1/140	R
EEAS127	Piece, distance	4	S96	C	CE1/141	R
SP90/C8	Pin, split, 1/16in. dia.	4	-	C	CE1/142	R
EA3.45.359	TUBE, control aft of bulkhead (Pre Mod 4930)	2	-	L	CE1/143	R
EA3.45.673	TUBE, control aft of bulkhead (Mod 4930 Pre Mod 5473)	2	-	L	CE1/144	R
EB8.45.743	TUBE, control aft of bulkhead (Mod 5473)	2	-	L	CE1/145	R
EB8.45.1541	TUBE, rudder control aft of bulkhead (Pre Mod 4930)	1	-	L	CE1/146	R
EB8.45.1781	TUBE, rudder control aft of bulkhead (Mod 4930 Pre Mod 5473)	1	-	-	CE1/147	R
EB8.45.1839	TUBE, rudder control aft of bulkhead (Mod 5473)	1	-	-	CE1/148	R
	Attachment of tubes					
EEAS13/1	Bolt, 1/4in. BSF	6	S96	C	CE1/138	R
EEAS14	Bush, spacing	6	S11	C	CE1/139	R
EEAS63/E	Nut, 1/4in. BSF	6	S96	C	CE1/140	R
EEAS127	Piece, distance	6	S96	C	CE1/141	R
SP90/C8	Pin, split, 1/16in. dia.	6	-	C	CE1/142	R

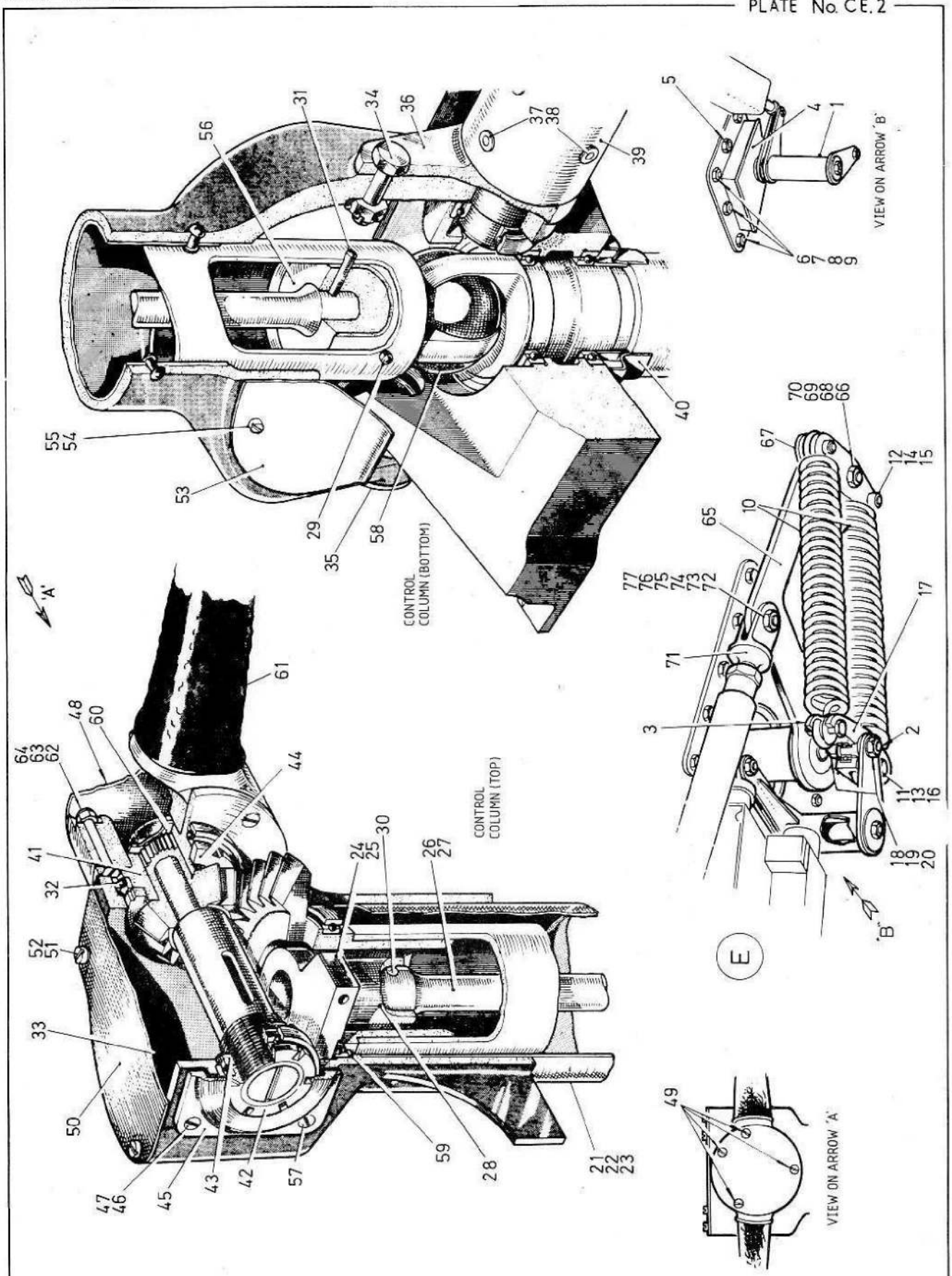
CONTROL COLUMN (BOTTOM)
CONTROL COLUMN (TOP)
VIEW ON ARROW 'B'
VIEW ON ARROW 'A'
'A'
'B'
E

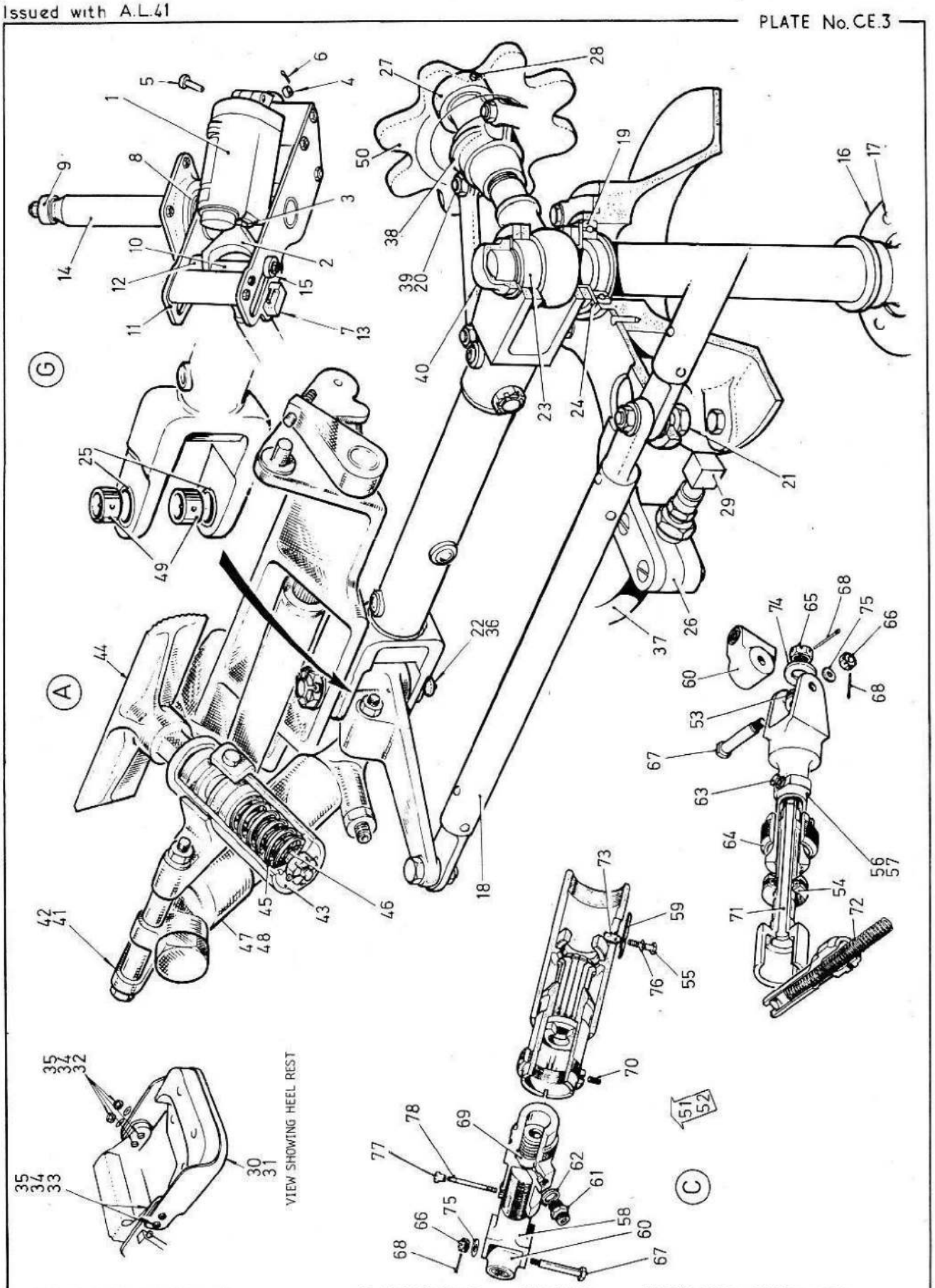
G
A
C
VIEW SHOWING HEEL REST
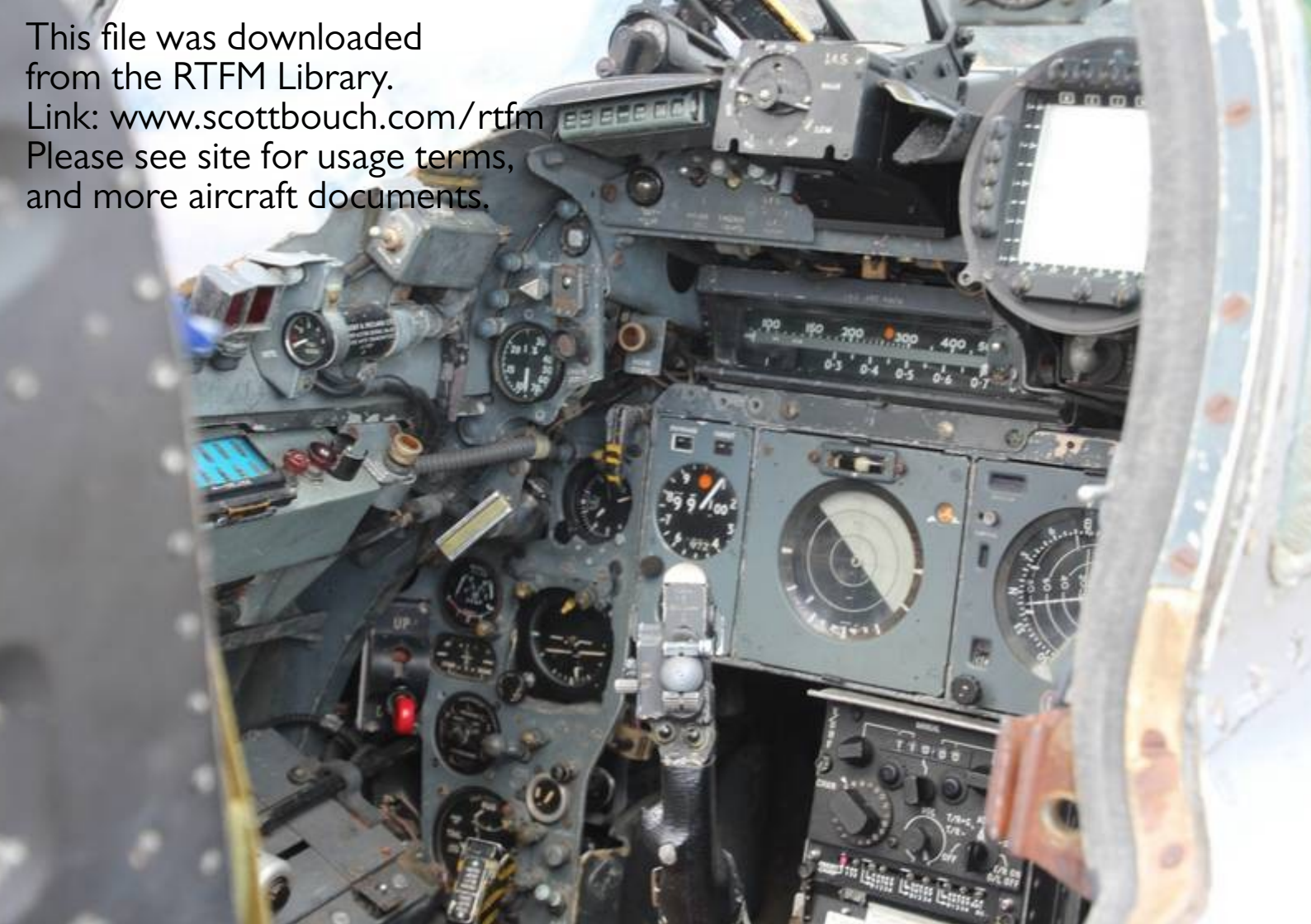
This file was downloaded
from the RTFM Library.
Link: www.scottbouch.com/rtfm
Please see site for usage terms,
and more aircraft documents.