Now 113C-0206-1

Chapter 2

BATTERY, TYPE H, 24-VOLT, 25 AMP. HR.

LIST OF CONTENTS

	Para.
Introduction	1
Description	
Cells	4
Electrical connections of the cells	8
Terminal block	11
Battery container	15
Servicing	19
Initial filling and charging	20
Routine charging	26
Batteries not in use	28
Effect of high altitude flying	29
Warping of plates and separators	33
Insulation resistance test	34

LIST OF ILLUSTRATIONS

	Fig.
Battery, Type H, 24V, 25 amp. hr.	1
Battery, 24V, 25 amp. hr. (cover removed)	2
Arrangement of terminal block for British terminals	3
Arrangement of terminal block for American quick-release connector	4

LEADING PARTICULARS

Battery, Type H, 24V, 25 amp. hr.	**Ref. No. 5J/3303**
Capacity—	
At 10 hour rate	40 *amp. hr.*
At 1 hour rate	25 *amp. hr.*
Weight without electrolyte	58 *lb. approx.*
Weight with electrolyte and charged	76 *lb. approx.*
Overall dimensions (without handle)	
Length	11·85 *in.*
Width	9·75 *in.*
Depth	9·75 *in.*

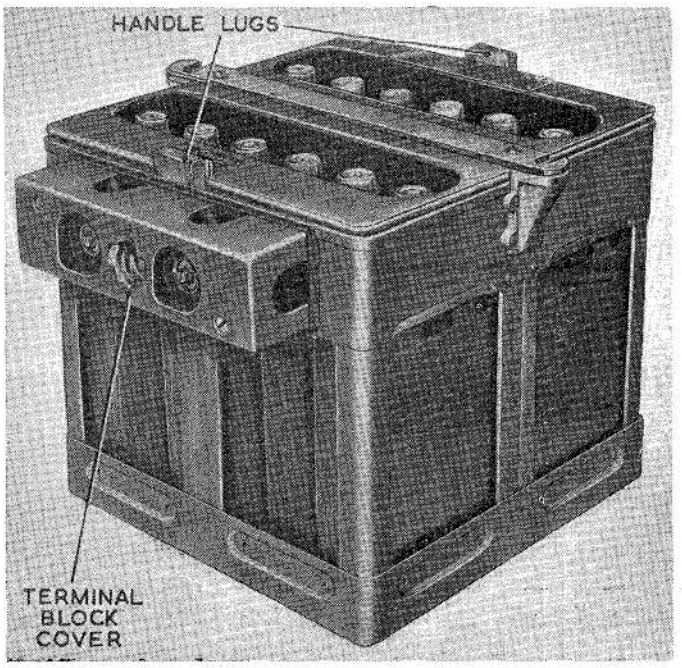

Fig. 1. Battery, Type H, 24V, 25 amp. hr.

Introduction

1. The Type H battery (fig. 1) is lighter in weight than other types of battery of corresponding capacity and voltage.

2. Information on lead-acid batteries contained in A.P.4343, Vol. 1, Sect 3, Chap. 2, applies to the Type H except for the paragraphs dealing with battery construction.

3. Several features in the construction of this battery are different from others such as the Type C, and are described in the following paragraphs.

DESCRIPTION

Cells

4. Each cell is made up of 7 positive and 8 negative plates, each measuring approximately 0·045 in. thick. The separators are approximately 0·045 in. thick.

5. The small vent chamber at the top of the cell provides a reservoir for the displaced electrolyte when the cell is tilted. It is effective in preventing the spillage of electrolyte for angles of tilt up to 60 degrees on either side of the vertical.

6. The cell vent plug is a shortened version of the R.A.F. unspillable type and the terminal posts are short to obtain a maximum saving in weight.

7. The cell box is made of plastic, and the lid is permanently cemented to the top of the cell box to make a liquid-tight joint.

Electrical connections of the cells

8. The inter-cell connecting links, shown in fig. 2, are welded in position, so that individual cells cannot be removed, as was the case with earlier models of the battery.

9. The final positive and negative connection are brought out to a hard rubber terminal block mounted on one side of the battery container. The terminal block is

covered by a metal cover which has cable entries at the top, bottom and sides for external connection. Insulated grommets fixed to the cable entries prevent the possibility of short circuits.

10. Non-interchangeability of the positive and negative cable terminals is achieved by limiting the widths of the channels in the terminal block to suit the different sizes of the positive and negative connectors on the cables.

Terminal block

11. The arrangement of the terminals on the terminal block can be varied to accommodate standard British connectors (*fig.* 3), American spade connectors or the American quick-release connector (*fig.* 4).

12. Normally the battery terminals consist of screwed studs fitted with captive terminal nuts. These studs will accept cable connectors conforming to the dimensions quoted in B.S.S. G131 for Aircraft. The captive terminal nuts are spring loaded so that when the battery is fitted in places where access is difficult, the cable connectors can be pushed under the terminal nuts and will be held temporarily in position by the spring pressure until it is possible to screw the terminal nuts home. It is not intended that the spring pressure alone should hold the cable connectors in position.

13. When the American spade connectors are used on the external cables, the locking screws of the captive retaining nuts are removed.

14. When the American quick-release connector forms the termination of the external cables, the captive retaining nuts are removed from the terminals on the terminal block, leaving the studs bare. Plug adapters, which are carried on studs at opposite corners of the terminal block, when not in use, are then screwed onto the terminal studs to form plain plug terminals for the quick-release connector. On completion of the change-over, the cover is replaced in position over the terminal block.

Battery container

15. The cells which form the battery, fit in a strengthened metal container. The cells rest on a rubber mat at the bottom of the container, and the resilience of the mat accommodates dimensional variations in the height of the cells.

16. The cells are held in the container by a dished plastic cover which bears down on rubber washers on top of the cells. This cover also screens the vent plugs from mechanical damage and prevents electrolyte or distilled water from spilling on the metal parts of the battery.

17. Riveted across the top of the battery cover is a metal strip slotted at each end to accept the American method of fixing the battery in the aircraft. A handle, for carrying the battery, fits in metal clips on the sides of the container and is supplied as a separate item.

18. The container itself is dished at vulnerable points such as corners and vertical and horizontal edges to form air spaces between the container and the cells. In this manner considerable deformation of the container can take place before any force is transmitted to the cells.

SERVICING

19. ◀General servicing instructions for this type of battery are given in A.P.4343, Vol. 1, Sect. 3, Chap. 2. In addition, the following particular instructions apply.

Initial filling and charging

20. The S.G. of electrolyte for initial filling is 1·270. Fill each cell to the top of the perforated separator guard, allow to stand for four hours, then add sufficient acid to restore the levels. Allow the battery to stand for a further two hours.

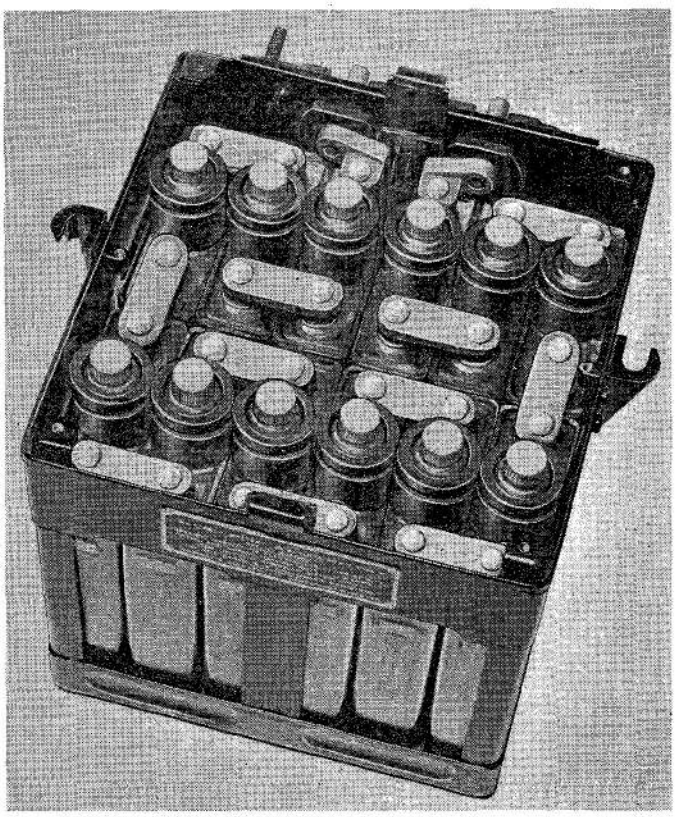

Fig. 2. Battery, 24V, 40 amp. hr. (cover removed)

21. Charge at 3 amp. until the voltage and S.G. are constant over a period of three consecutive readings taken at half-hourly intervals. This will normally be eight to twenty hours, depending on the age of the battery and the conditions of storage.

22. During this initial charging period, attention must be given to the temperature of the cells. If the cell temperatures rise above 110 deg. F, then the charge must be discontinued and the cells allowed to cool to below 90 deg. F. The charging current should then be reduced to half its normal value and the duration of charge increased proportionately.

23. At the end of the initial charging period, the S.G. of the electrolyte will be between 1·270 and 1·310, and should then be adjusted to 1·280 to 1·295, corrected to a temperature of 60 deg. F.

24. At this stage it will most probably be noticed that the electrolyte level is no longer at its correct mark, but will have been artificially raised by virtue of the amount of gas bubbles trapped within the plates. The battery should be allowed to stand until gassing has ceased. In order to disperse the trapped gases the battery should periodically, during the standing period, be tilted from side to side and the level of the electrolyte checked.

25. More acid of S.G. 1·285 may then be added as necessary to raise the level to the top of the perforated separator guard. This level is most important and must not be exceeded, otherwise the unspillable properties of the battery may be affected during flight, or the electrolyte may be forced up through the vents due to normal gassing during bench charging.

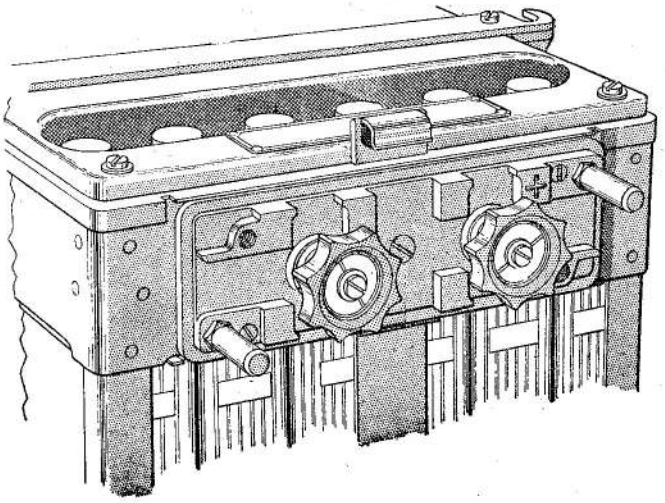

Fig. 3. Arrangements of terminal block for British terminals

Routine charging

26. A battery that has been discharged to its bottom limit during service must be recharged without delay. Charge at 3 amp until the voltage and S.G. remain constant for three consecutive half-hourly readings; the S.G. of a fully-charged battery is approximately 1·285.

27. To maintain the correct level of the electrolyte, use only distilled or approved water, preferably before charging. Never add acid except to compensate for loss due to spillage.

Batteries not in use

28. When a battery is not in use, it should

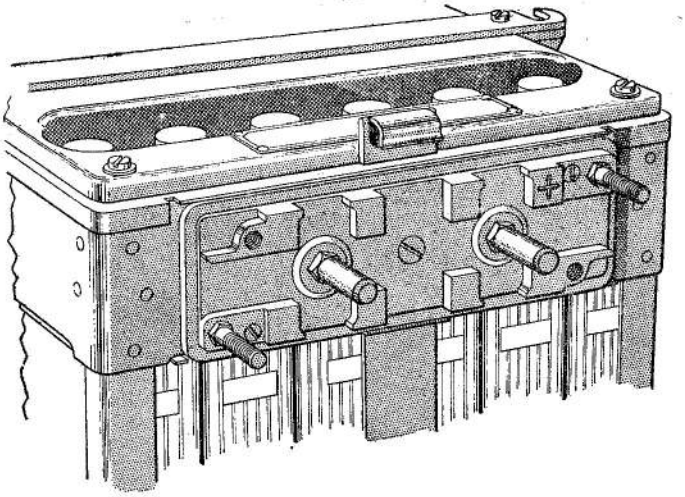

Fig. 4. Arrangement of terminal block for American quick-release connector

be given a freshening charge at 3 amp every two weeks. Generally a battery should not stand for longer than one week after charging before it is used. If a battery has stood for more than one week, it should be recharged before it is used.

Effect of high altitude flying

29. The quantity of electrolyte in a battery that has been in an aircraft flying at altitudes of more than 45,000 ft, will appear to have been reduced when the aircraft has returned to land. Before topping up a battery, the action described in the following paragraphs must be performed.

30. In a battery that has received an electrical charge at these altitudes, gas, normally present in the porous plates, will be released and electrolyte will take its place. On landing, the battery must be allowed to stand for at least two hours at ground level, during which time the level of the electrolyte should return to normal.

31. A battery that has been installed as stand-by equipment and has not received a charge at these altitudes, will be similarly affected. In this case, however, the level of the electrolyte will not be restored until the battery has received a freshening charge.

32. If the level of the electrolyte is still low after the necessary action has been taken, the battery should be topped up as necessary.

Warping of plates and separators

33. The battery is of thin plate construction and warping of the plates and separators is inherent in the design. Unless some other fault is present, warping is not to be taken as an indication of unserviceability.

Insulation resistance test

34. ◀ If a reading of less than 0·5 megohm is obtained in an insulation resistance test, the following procedure should be adopted: —

(1) Remove the top cover and terminal assembly.

(2) Drill and remove the rivets securing the top cover securing brackets and remove the brackets.

(3) Lift out the cells as a complete block.

(4) Remove the insulation panels and rubber mat.

(5) Neutralize all acid-contaminated parts with a saturated solution of bicarbonate of soda (Ref. No. 33C/261), and copiously wash all parts with running fresh water, using a suitable stiff brush where possible.

(6) Allow all parts to dry thoroughly.

(7) Paint metal parts with black anti-sulphuric paint (Ref. No. 33A/9428699).

(8) Reassemble the battery, and re-rivet the top cover securing brackets. Paint the rivet heads with primer (Ref. No. 33A/9436190).

(9) Carry out a full second-line servicing, including capacity test.

(10) The insulation test must now produce a reading of at least 0·5 megohm. ▶

460131/Wt.59026/D.4511 3,000 5/60 E.S.Ltd. Gp.375/7

This file was downloaded
from the RTFM Library.

Link: www.scottbouch.com/rtfm

Please see site for usage terms,
and more aircraft documents.