Now 113D-07101-16

Chapter 16

CONTROL PANEL, TYPE 24 (ROTAX U2401) AND VARIANTS

LIST OF CONTENTS

LIST OF ILLUSTRATIONS

LIST OF APPENDICES

LEADING PARTICULARS

Control panel, Type 24	Ref. No. 5UC/5760
Voltage (input)	115 V a.c.
Frequency	400 c/s
Weight	4·25 lb.
Length	6·469 in.
Width (including mounting lugs)	6·375 in.
Depth	3·197 in.

Introduction

1. The control panel Type 24 (*fig.* 1) has been designed to work in conjunction with the inverter Type 103 and control panel Type 15 in circumstances where there will be

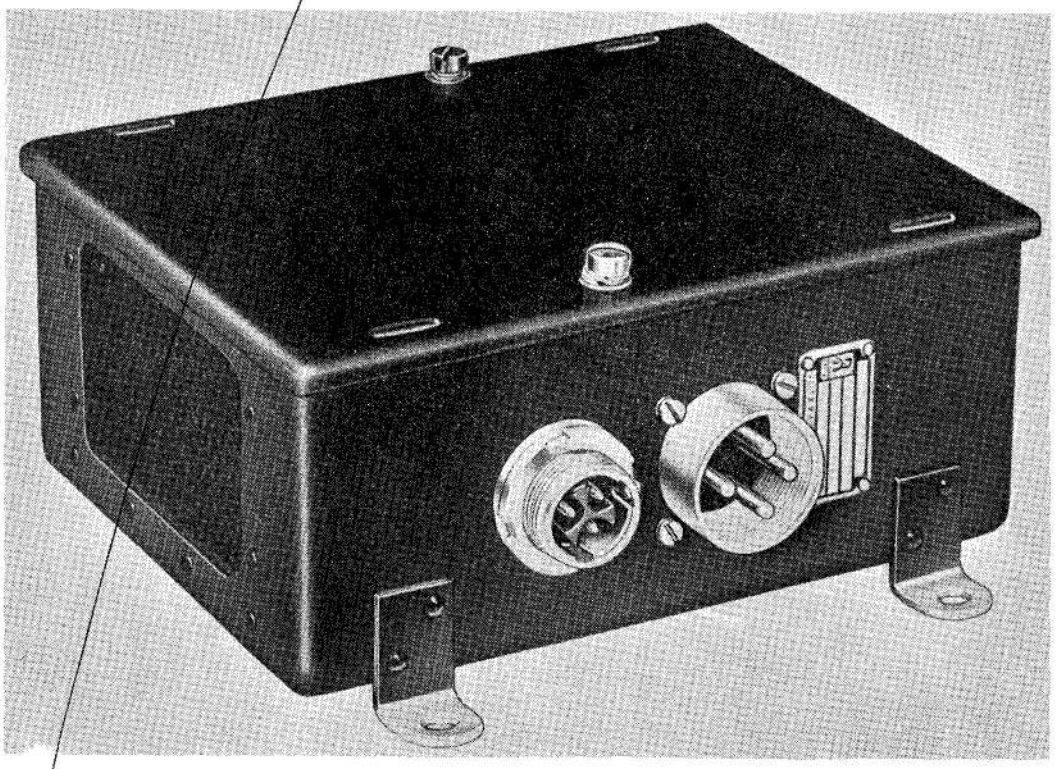

Fig. 1. General view of control panel Type 24

comparatively heavy repetitive pulse loadings of very short duration.

2. Pulsed loads of 800 watts, 40 mS duration and at the rate of 2 per sec. can be dealt with. The Type 15 control panel used on its own would not respond quickly enough to these pulses. The circuit diagram (*fig.* 3) shows the complete circuit for a Type 15 and a Type 24 control panel, and the inverter Type 103.

DESCRIPTION

3. The panel (*fig.* 2) consists of two main components, a current transformer, 6TR1, and a rectifier, 6MR1, both being contained within an aluminium case. Three miniature plugs (two 12 pole and one 3 pole) are mounted in one side of the case for connection to the Type 103 inverter, and the Type 15 control panel. In the opposite side of the case there are two plugs, one 3 pole miniature and one 4 pole standard. The 3 pole plug is for the normal 400 c/s, 3-phase output of the inverter, and the 4 pole plug connects to the pulse load.

4. The panel cover is provided with air vents in top and bottom, and the main panel has four steel lugs riveted to it for mounting purposes.

5. The transformer primary windings are connected in series with the pulse load, and to the 400 c/s, 3-phase inverter output. The secondary windings have two tappings, 1 (maximum turns—minimum current) and 2 (minimum turns—maximum current) either of which can be connected to the rectifier by way of a terminal block. They are normally sent out by the manufacturer connected to 1. Tapping 2 should only be used where the inverter has a low level of excitation, and therefore greater compounding is required.

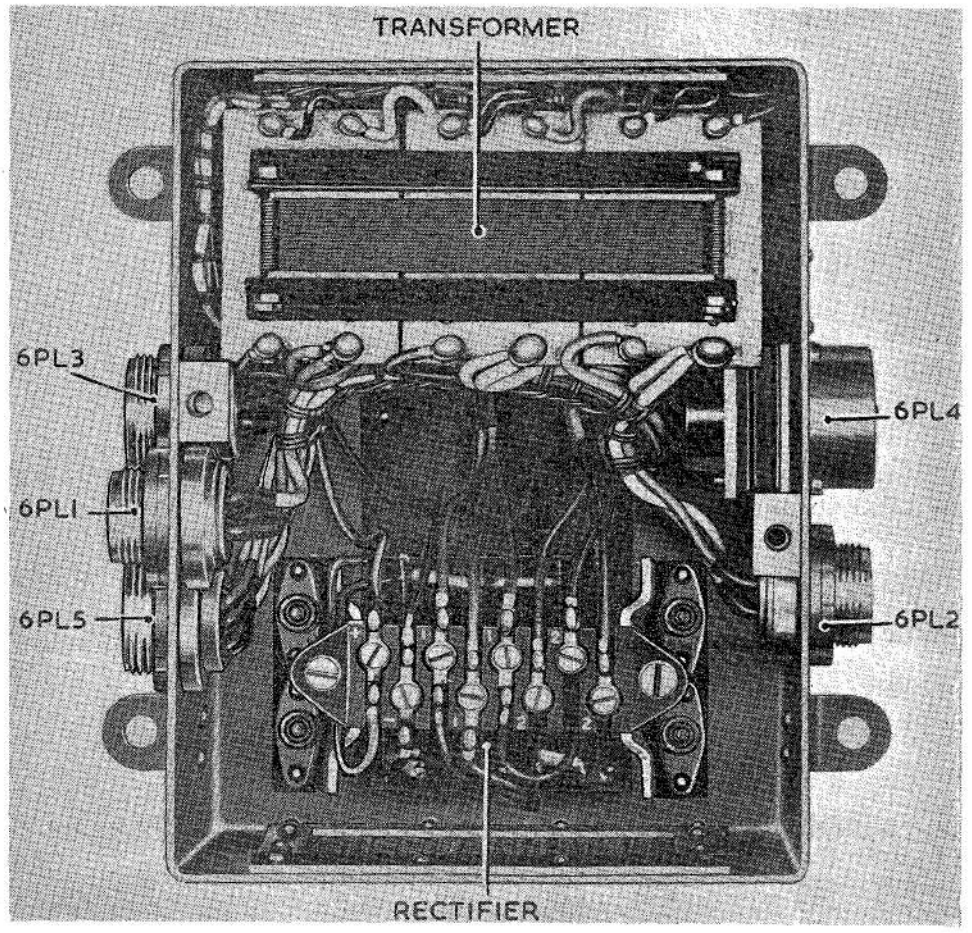

Fig. 2. View of panel (top cover removed)

6. Under normal conditions current flow is direct from inverter to control panel Type 15. The primary winding of 6TRI only passes current when the pulse loading takes current by virtue of their being connected in series. This primary current is reflected in an increased output from the secondary winding and thus from rectifier 6MR1. This rectifier feeds direct on to the alternator field, and thus the excitation of the alternator is increased rapidly. Increased excitation gives immediately increased output from the alternator, and the pulse load is accounted for.

7. The primary winding of the transformer gives rise to a volt drop, and therefore two voltages occur between normal and pulsed loads.

Note . . .

Under no circumstances must any of the pulse load lines be connected to earth.

INSTALLATION

8. The panel must be mounted only in the vertical position, i.e. with the air vents at the top and bottom. The air vents must not be obstructed by any member closer than one inch. Plug connections are as stated in para. 3 and shown in fig. 2.

SERVICING

9. Servicing these units will normally be restricted to checking security of connections and that no damage is apparent. Where it is obvious that such components as transformers, rectifiers, etc. are unserviceable, these components will need renewal.

Insulation resistance test

10. The insulation resistance between all live parts and the chassis should be measured with a 250-volt insulation resistance tester; the reading should not be less than 0·5 megohm (for R.N.) or 5 megohms (for R.A.F.).

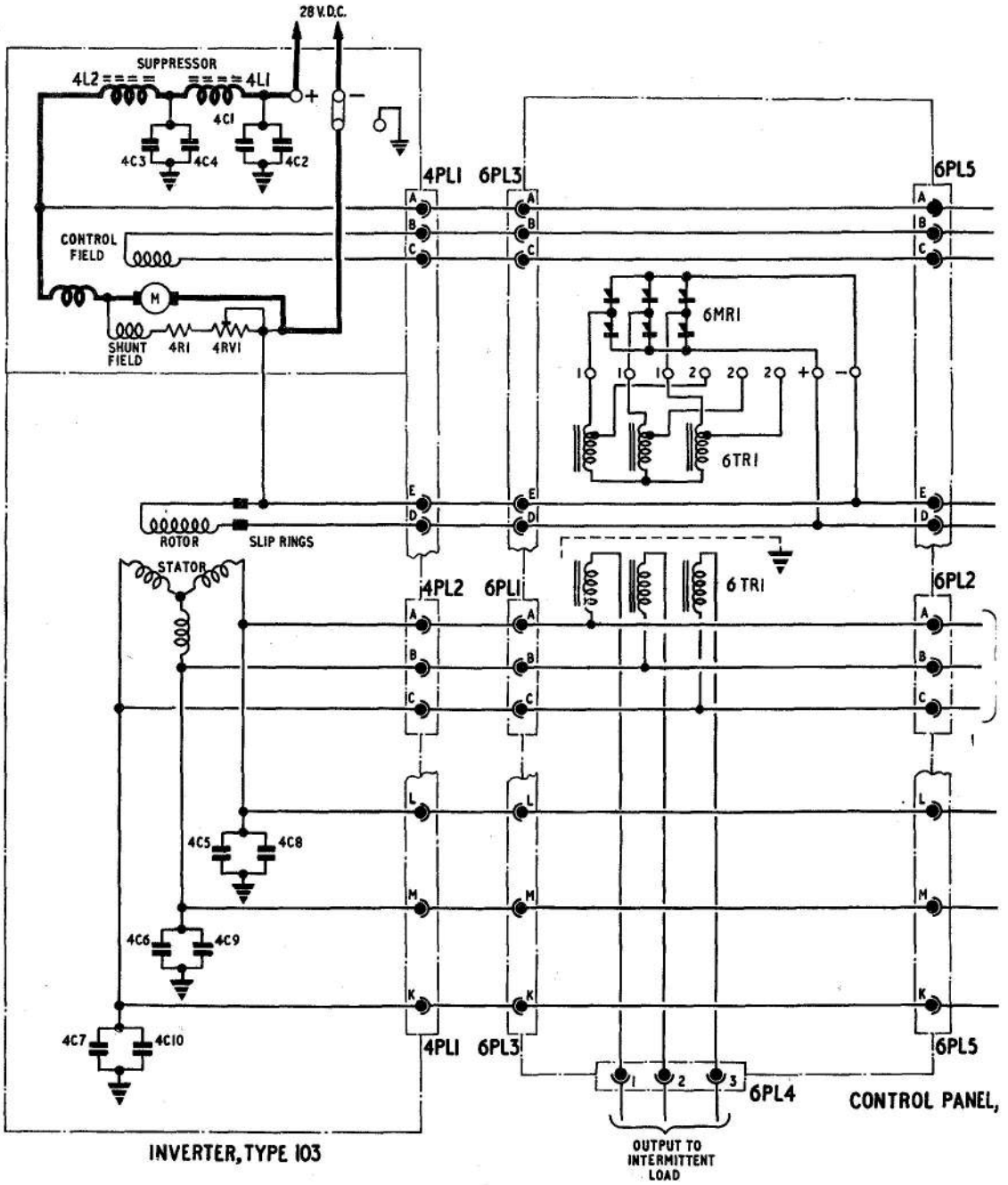

Fig.3

Circuit diag

F.S./3.

PP8889 140260/2852 6/61 2131 C & P Gp. 924 (4)

RESTRIC

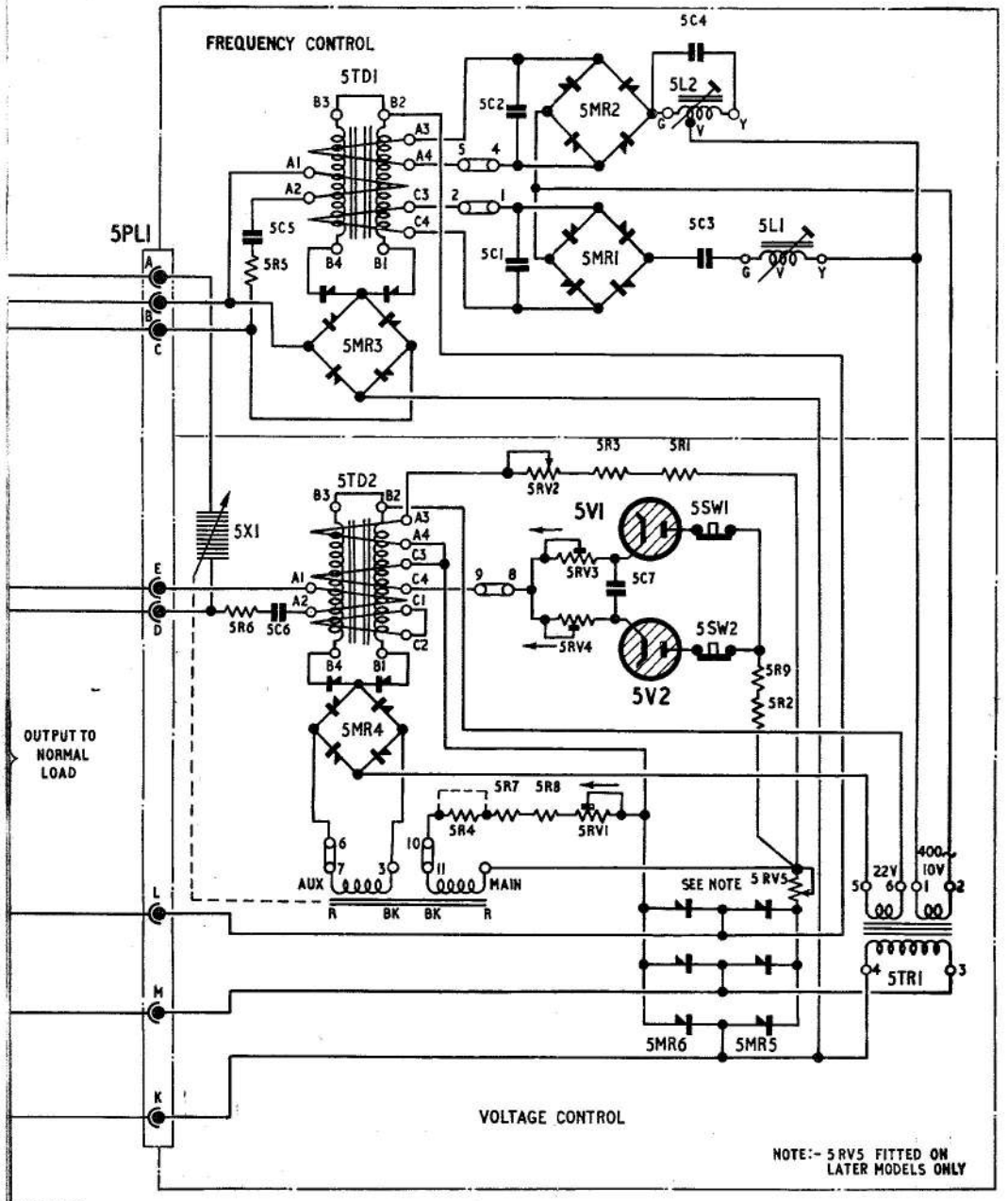

TYPE 24

CONTROL PANEL, TYPE 15

ram

T E D

Fig.3

Appendix 1

CONTROL PANEL, TYPE 24B (ROTAX U2404)

LEADING PARTICULARS

Control panel, Type 24B	*Ref. No. 5UC/6540*
Voltage (input)	115*V a.c.*, 3-*phase*
Frequency	400 *c/s*
Weight	4 *lb.*
Overall dimensions—	
Length	6·469 *in.*
Width (including lugs)	6·375 *in.*
Height	3·237 *in.*
Electrical connections—	
Plug No. 1 *and* 2 (3 *pole*)	*Plessey—High temperature MK.* 4—2*CZ*108431
Plug No. 3 *and* 5 (12 *pole*)	*Plessey—High temperature MK.* 4—2*CZ*84961
Plug No. 4 (4 *pole*)	*Plessey—High temperature Standard type* 2*CZ*111299

1. The control panel, Type 24B (Rotax U2404) is similar to that described and illustrated in the main chapter except that the function performed is at a high ambient temperature.

2. The three-phase selenium rectifier (6MR1) included in the main chapter has been replaced by a bridge network of silicone diodes (6MR1-6) with a minimum heat sink required for the high ambient temperature.

3. Dissipation of heat from the silicone diodes at high ambient temperature is effected by two sink separators situated on a group board assembly. This control unit is for use with inverter, Type 103B (Rotax S3109) and control unit, Type 15B (Rotax U1506), interconnected as shown in fig. 1.

Installation

4. Four holes 0·265 in. diameter are provided in the mounting feet, these being positioned on 5·750 ± ·005 in. and 4·500 in. centres respectively. Provision should be made to allow for withdrawal of mating sockets from the connecting plugs at both sides of the unit. From the vertical axis of the unit extending over the three plug side, allow a withdrawal dimension of 4·768 in. and extending over the two-plug side allow a withdrawal dismension of 4·843 in.

P31363 157612/4064 12/61 2250 C & P Gp 375

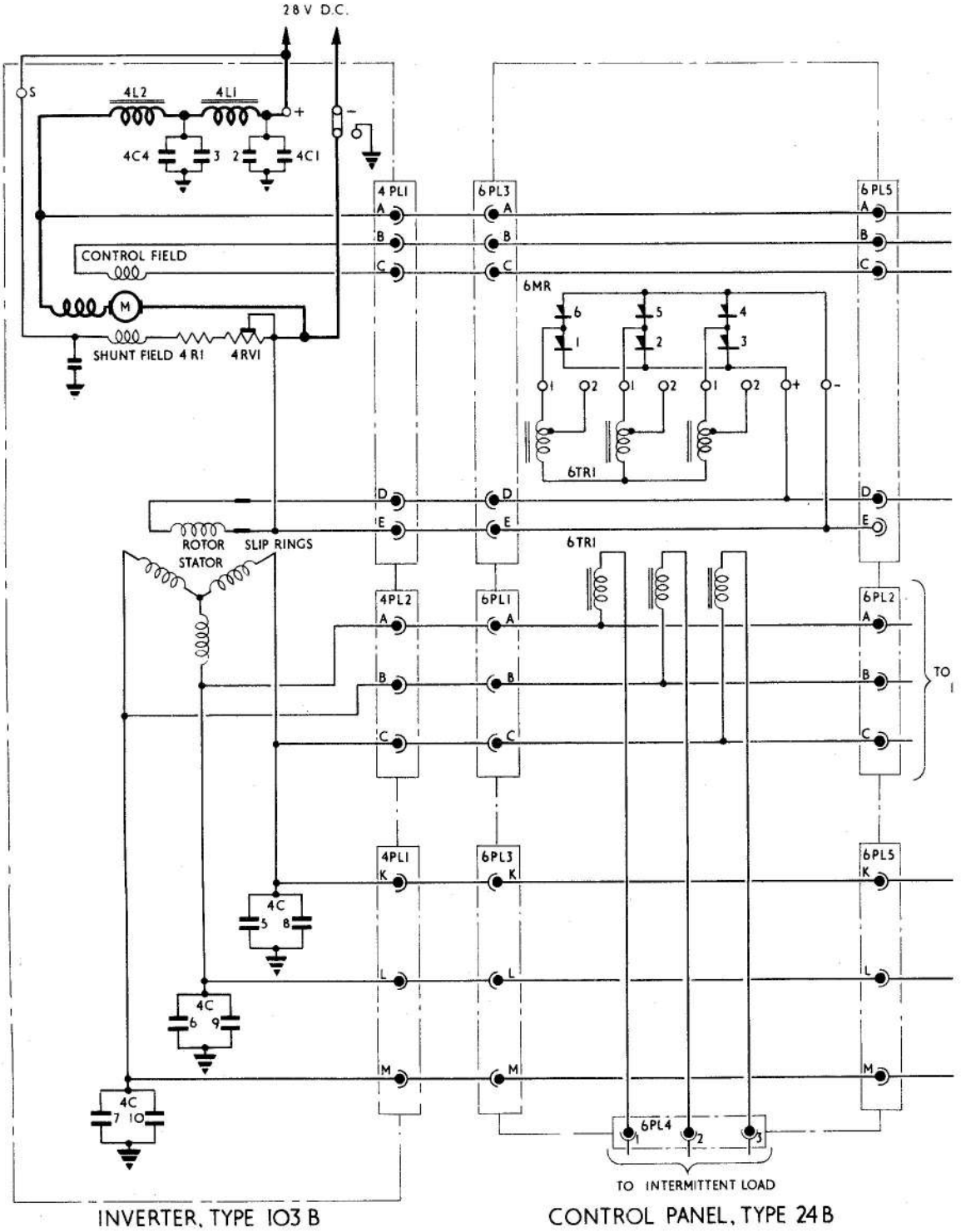

Fig. 1

Circuit di
RESTRI

PP8943 157613/4065 11/61 2256 C & P Gp. 924 (4)

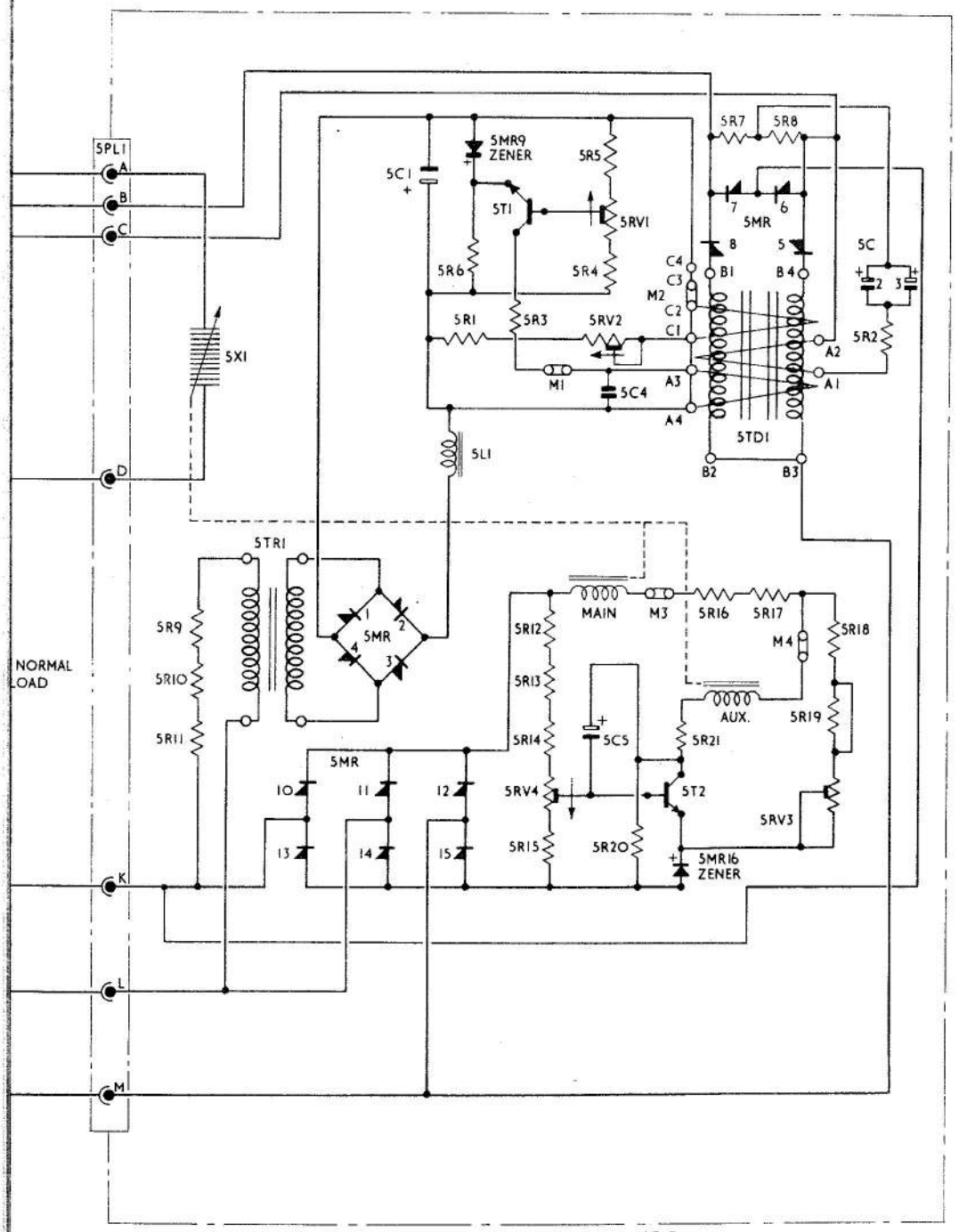

CONTROL PANEL, TYPE 15 B

agram
C T E D

Fig. 1