# Chapter 78

## MAGNETIC SWITCH, TYPE 16B, No. 2 (PAGE RH11)

### LIST OF CONTENTS


| | Para. | | Para. |
|---|---|---|---|
| Introduction... | 1 | Servicing ... | 5 |
| Description | 2 | | |


### LIST OF ILLUSTRATIONS


| | Fig. | | Fig. |
|---|---|---|---|
| Magnetic switch, Type 16B, No. 2 | 1 | Circuit diagram | 2 |


### LEADING PARTICULARS

| | |
|---|---|
| **Magnetic switch, Type 16B, No. 2** | Stores Ref. 5CW/5697 |
| Voltage | 24 d.c. |
| Coil resistance at 15·6 deg. C. | 670 ohms ± 5 per cent |
| Contact rating | 4 amp. at 60V d.c.<br>2 amp. at 300V d.c.<br>4 amp. at 300V a.c. |
| Overall dimensions— | |
| Length | $3\frac{5}{16}$ in. |
| Width | $1\frac{3}{8}$ in. |
| Height | $3\frac{1}{16}$ in. |
| Weight | $8\frac{1}{2}$ oz. |
| Minimum circuit current | 21 mA |

#### Introduction

**1.** The magnetic switch, Type 16B, No. 2, is a sealed, miniature type relay with heavy-duty contacts; the contact arrangement is one make, one break.

#### DESCRIPTION

**2.** This switch (*fig.* 1) consists of a sealed relay, Type M1096 (Inter-Service Ref. Z530031) secured to a moulded Bakelite base plate having shrouded 6 B.A. terminals. The switch is designed for panel mounting, and is provided with three rubber anti-vibration mountings incorporating 4 B.A. fixing studs.

**3.** The miniature relay, Type M1096, incorporates an L-shaped pole piece, reduced in thickness at the armature end to form a step into which the armature fits and pivots on a flat spring attached to the pole piece. An extension on the armature passes along a slot in the long side of the pole piece, and an operating arm, riveted to the armature extension, operates the moving springs of the relay.

**4.** The springset is built up of flat springs with silver-nickel contacts, and the complete assembly is fixed to the armature end of the pole piece. The coil is single wound, and, when energized, attracts the armature to operate the contacts.

## SERVICING

**5.** Since the switch mechanism is sealed, no servicing is possible apart from a general inspection for freedom from damage and security of connections. The minimum circuit current of 21 mA quoted under Leading Particulars is that current which must normally be available for operation to ensure an adequate factor of safety; the switch should operate when a test current of 16 mA is applied to terminals a and b.

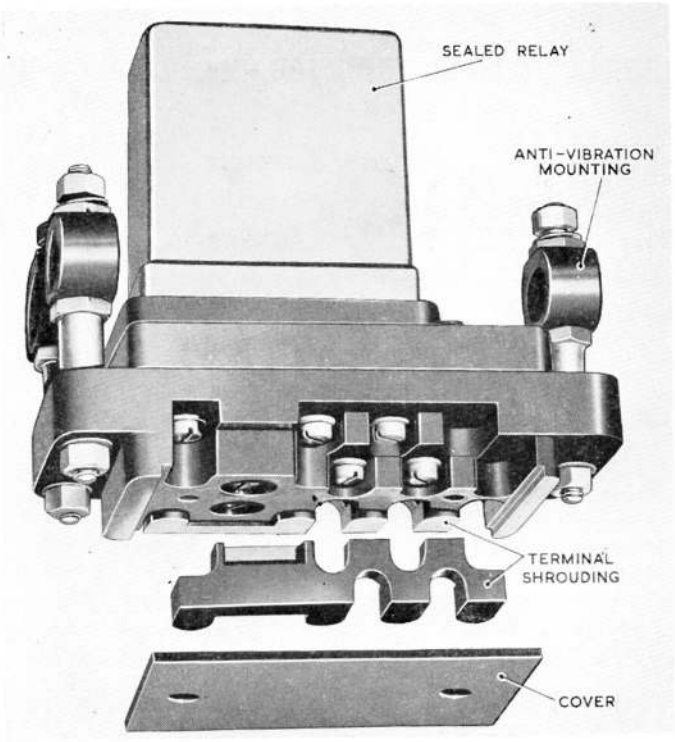


**Fig. 1. Magnetic switch, Type 16B, No. 2**

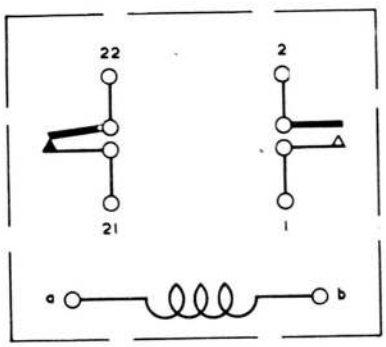


**Fig. 2. Circuit diagram**

This file was downloaded
from the RTFM Library.

Link: www.scottbouch.com/rtfm

Please see site for usage terms,
and more aircraft documents.