Chapter 41

ACTUATOR, ENGLISH ELECTRIC, TYPE 271

LIST OF CONTENTS

	Para.
Introduction	1
Description	2
Housing and covers	6
Gearbox	11
Acme screw and nut assembly	14
Potentiometer	15
Motor and brake assembly	16
Installation	20
Operation	
High speed	23
Low speed	24
Protection	25
Servicing	
Functional check	26
Inspection of brushes	27
Lubrication	30
General	32

LIST OF ILLUSTRATIONS

	Fig.
General view, Type 271 actuator	1
Wiring diagram (high speed motor)	2
Wiring diagram (low speed motor)	3

LEADING PARTICULARS

Actuator, Type 271	Stores Ref. 5W/391
Rated voltage	28V, d.c.
Speed of motors	11,000 r.p.m.
Output of each motor	356 watts
Maximum working load	
High speed	8,000 lb.
Low speed	16,000 lb.
Normal working load	3,000 lb.
Static load (as an aircraft strut)	27,000 lb.
Clutch slip load	16,500—18,000 lb.
Normal working stroke	2·63 in.
Stroke between stops	3·28 in.
Time of stroke	
Normal load (high speed)	8·5 secs.
Normal load (low speed)	24 secs.
Distance between centres (closed on stop)	13·165 in.
Min. brush length	0·25 in.
Brush spring pressure	11—15 oz.
Brush grade	EGO (HAM)
Weight	31 lb.

Introduction

1. The linear actuator, Type 271 (fig. 1) has been designed to provide variation in the angle of incidence of the tailplane under all conditions of flight. It is a two speed actuator; at high speed a working load of up to 8,000 lb. can be handled, and at low speed this load increases to a maximum of

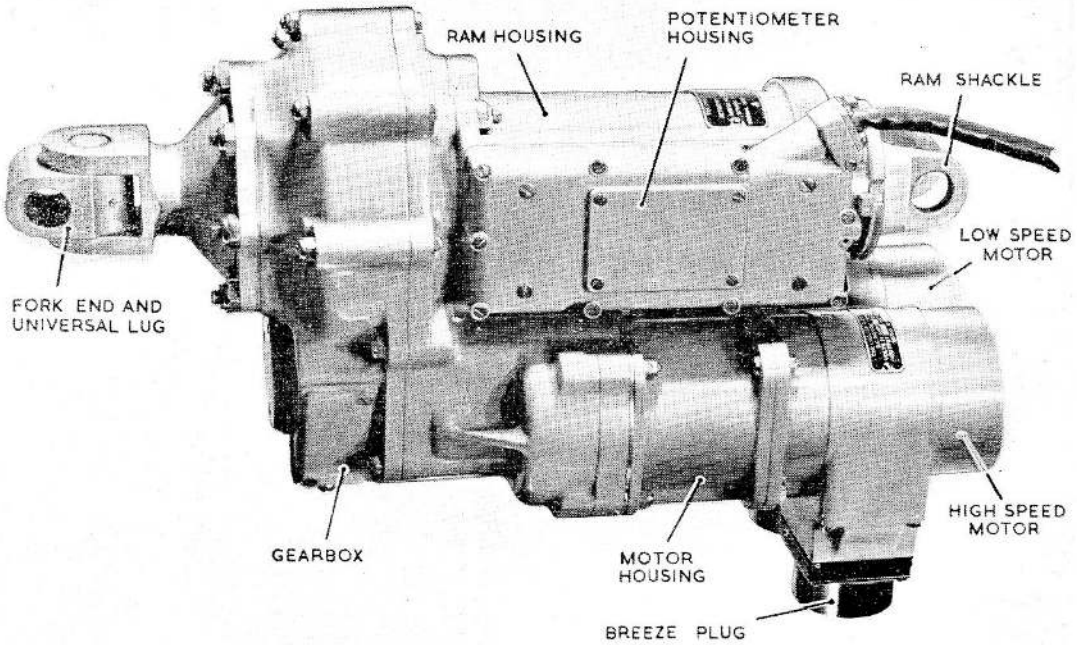

Fig. 1 General view, Type 271 actuator

16,000 lb. Acting as a strut in the air frame, it can withstand loads of up to 27,000 lb. both in tension and compression.

DESCRIPTION

2. The actuator consists of two identical 28V, d.c. compound wound motors, mounted side by side, and parallel to the ram. Each motor is fitted with an electromagnetic brake to ensure accurate positioning at any point during the stroke. By means of a differential arrangement of spur and epicyclic gears the two motors drive independently, thus providing two speeds of operation. The final spur gear is splined to an acme screw, which, through its mating thread on the ram, provides a linear movement.

3. Although mechanical stops are provided the unit must always be used with external limit switches, so preventing running against the mechanical stops unnecessarily.

4. The gearbox incorporates an overload friction clutch. Thus, in the event of limit switch failure, or any other cause of severe overloading, the air frame or actuator is not damaged.

5. A position indicator potentiometer is mounted in the unit, and is intended for use with a Desynn type instrument.

Housing and covers

6. Each motor housing consists of two alloy castings, and a brushgear and commutator inspection cover. One casting forms the motor field system frame and brushgear mounting, the other forms the brake housing and driving end plate. Both castings are held together by four steel bolts. Positioned on the motor frame casting is a cable gland, and mounted on this is a Breeze plug.

7. The two motors are located on an adaptor plate, through which studs pass to the gear case.

8. The gear case comprises two alloy castings which form the front and rear halves. They are held together by ten steel studs.

9. The ram housing is an alloy casting enclosing the acme screw and nut assembly and potentiometer indicator transmitter. It is held on the gear case by four studs. The ram shackle is a fork end on the end of the acme nut, and positioned in line with it, but at the opposite side of the gearbox, is another steel fork end and universal lug.

The fork end is held on the gearcase by eight bolts.

10. An alloy side cover on the ram housing serves to mount the potentiometer, and also seals it into the housing.

Gearbox

11. Using a pinion mounted on the armature shaft, the high speed motor drives direct into an epicyclic gear system, and then by spur gears to the acme thread.

12. The low speed motor also has a pinion mounted on the armature shaft. This drives a spur gear system, and then engages with the epicyclic gear system as in the high speed motor. When either motor is running the other is locked.

13. The clutch is of the disc type. Its main shaft carries an input spur gear, and if the clutch is not slipping (due to overload) the drive is transmitted to an output spur gear. Both of these spur gears form part of the spur gear system mentioned in para. 11.

Acme screw and nut assembly

14. This assembly consists of an aluminium bronze acme nut, a hollow steel screw, and a hollow steel sleeve which travels inside the screw. The hollow sleeve is attached to the acme nut, and moves with it. Screwed into the hollow sleeve is the ram shackle (*para.* 9) and the amount it must be screwed in for safety is indicated by a safety hole. To be safe it should not be possible to push a wire into the hole, thus indicating that the screw is in far enough. The acme nut is prevented from turning by torque reaction lugs.

Potentiometer

15. The potentiometer is of the usual type associated with Desynn type instruments. There is an adjusting screw tapped into the mounting board, and captive in the cover. By turning this the position of the coils relative to the acme thread can be adjusted. The leads are brought out to a terminal block, situated under a removable plate in the centre of the cover. The cable enters by way of a gland and clamping plate.

Motor and brake assembly

16. Essentially, both motors are exactly the same, but the plug connections are

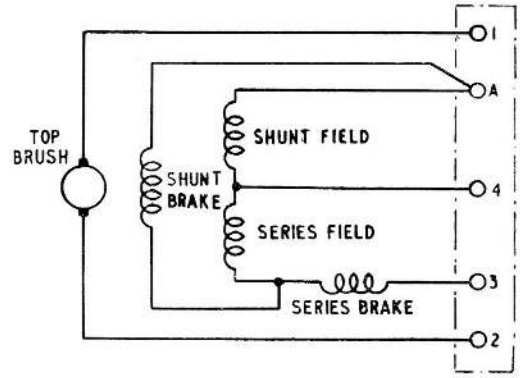

Fig. 2. Wiring diagram (high speed motor)

purposely made non-interchangeable (*fig.* 2 *and* 3).

17. The designed output is 356 watts at 11,000 r.p.m. 28V, d.c. supply. The windings are compound, and reversal of rotation is effected by external switch gear.

18. The two alloy brush boxes are mounted on a moulded rocker. This is adjustable for setting the neutral position. The brushes are E.G.O. (H.A.M.) type, and are held in contact by coiled wire springs. Brush spring pressure must be 11-15 oz.

19. A brake drum is fixed to a flange on the armature shaft, and the brake yoke is fixed in the end plate. With the current off, four shoes are held against the brake drum thus preventing any rotation of the motor.

INSTALLATION

20. The distance between centres at the

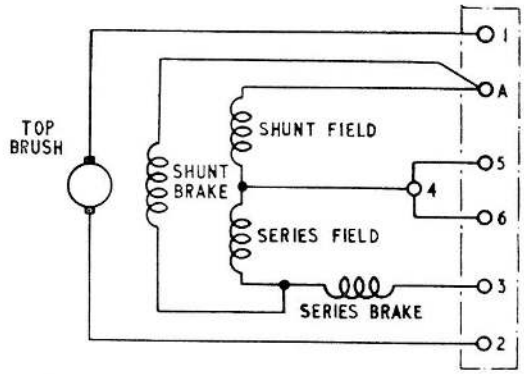

Fig. 3. Wiring diagram (low speed motor)

ram shackle and the universal lug (*para.* 9) with the actuator fully closed up on the stops, should be 13·165 in. ± ·015 in. The stroke between stops should be 3·28 in. ± ·015 in.

21. Before the actuator is brought to the mounting, the alignment of the mounting lugs should be checked. The neutral position on the Desynn indicator should be obtained when the actuator is in its neutral position by suitably setting the potentiometer adjusting screw.

22. After the actuator has been installed in the aircraft, a check should be made on its no-load current. If this has increased considerably over that obtained in the original test rig then the airframe linkage should be checked.

OPERATION

High speed

23. For high speed operation, the low speed motor armature is locked. Therefore the high speed drive is straight from the motor, through the epicyclic gear and spur gear train, on to the acme screw.

Low speed

24. For low speed operation, the high speed motor is locked. The drive is now through the first train of spur gears, on to the epicyclic gear, through the second train of spur gears, and thus to the acme screw.

Note . . .

The actuator must only be operated in a test rig, or on an aircraft where external limit switches are incorporated in the circuit.

Protection

25. If the load on the actuator exceeds 16,000 lb. the clutch will slip. The sustained heavy current will cause the circuit breaker to trip and cut off the motor supply.

SERVICING

Functional check

26. Carry out the check quoted in para. 22. If the current is much above normal, then the actuator must be removed, and run in a test rig to see if it is the actuator at fault.

Inspection of brushes

27. The brushgear should be examined at the periods stated in the relevant Servicing Schedule. On removal of the two commutator end covers the brushes are readily accessible. Each brush should be a free fit in its box, and any accumulation of carbon should be carefully blown away with dry compressed air.

28. The minimum brush length allowable is ¼ in. (measured from the top of the brush to the toe of the contact surface arc), and if it is below this, new brushes must be fitted and bedded down. The replacement brush grade is EGO (HAM). After bedding down new brushes all excess carbon dust must be blown away.

29. Brush spring pressure measured on a spring balance (Stores Ref. 1H/97) must be 11—15 oz.

Lubrication

30. At inspection periods the acme screw should be re-greased if necessary. Access to it is obtained by removing the cover plate on the opposite side of the potentiometer. The grease to be used for this purpose is XG-278 (Stores Ref. 34B/9105058).

31. No lubrication is necessary to either gearbox or motors, as these items are adequately lubricated during manufacture.

General

32. No further dismantling or internal inspection is necessary.

33. Examine the actuator for any signs of external damage. Ensure that all nuts, screws, and locking devices are secure. Inspect the electrical connections for tightness and freedom from corrosion. Ensure that the wiring is not frayed or loose. Care should be taken to ensure adequate application of sealing compound to joint faces when covers are replaced.

This file was downloaded
from the RTFM Library.

Link: www.scottbouch.com/rtfm

Please see site for usage terms,
and more aircraft documents.