Chapter 2

EJECTION, DROGUE AND CANOPY JETTISON GUNS

LIST OF CONTENTS

	Para.
Ejection gun	
Function	1
Cylinder tube	4
Intermediate piston tube	7
Inner piston tube	8
Firing body	9
Drogue gun	
Function	10
Firing mechanism	11
Barrel and piston	12
Canopy jettison and time-delay unit	
Function	14
Firing mechanism	15
Time-delay mechanism	16
Operation	17

LIST OF ILLUSTRATIONS

	Fig.
Ejection gun assembly	1
Drogue gun assembly	2
Canopy jettison and time-delay unit	3
Details of canopy jettison and time-delay unit	4

EJECTION GUN

Function

1. The ejection gun (*fig.* 1), which provides the power for the ejection of the seat and occupant from the aircraft, consists of three telescopic tubes with an overall stroke of 72 in. The outer or cylinder tube is attached at its lower end to the bottom mounting block fitted in the guide rail; the inner piston tube is attached at its upper end to the top cross-beam of the seat frame. The intermediate piston tube is situtated between the other two, and its purpose is to lengthen the stroke and to offer restraint against bending loads imposed on the gun during the ejection of the seat and occupant. The explosive contained in five cartridges: a primary cartridge (Stores Ref. 12D/1254), which is percussion fired by the action of pulling out the face screen, and four auxiliary cartridges (Stores Ref. 12D/1255) which are fired by the flame of the primary cartridge. The primary cartridge is housed in the firing body at the upper end of the inner piston tube, and the auxiliary cartridges are housed towards the lower end of the cylinder tube in horizontally-opposed pairs.

2. When the face screen has been withdrawn approximately 12 in., the firing cable attached to the face screen pulls the wedge-shaped sear out of the firing body. The movement of the sear first compresses the firing pin spring and then releases the firing pin to strike the percussion cap of the primary cartridge.

3. The gas pressure developed by the primary cartridge presses down the release piston, thus freeing the inner piston tube from the cylinder tube and, as the gas pressure rises, it propels both inner and intermediate tubes upwards until, after 16 in. of travel, the intermediate piston skirt uncovers the first two horizontally-opposed ports in the cylinder tube wall, through which the flame passes to ignite two of the auxiliary cartridges, the gas pressure from which assists in the propulsion. After a further 9½ in. of travel, the piston skirt uncovers two further ports, thus igniting the last two auxiliary cartridges. After approximately 36 in. of travel, the piston skirt at the bottom of the intermediate piston butts against the pressure rings which absorb the inertia force. The inner piston continues to rise until, after 72 in. of travel, the inner and intermediate piston tubes separate; the intermediate piston tube remains in the cylinder tube and the inner piston tube remains attached to the ejected seat. The total time for the gun to complete its stroke is approximately ⅕ sec.

Cylinder tube

4. This is a thin-walled duralumin tube with an accurately lapped bore, and when withdrawn from the guide rail for servicing must be handled carefully. Towards its upper end externally is a centering plate to keep the gun steady in the guide rail when the seat frame is installed in the aircraft The auxiliary cartridges are retained in their housings by covers which are locked with sealed locking

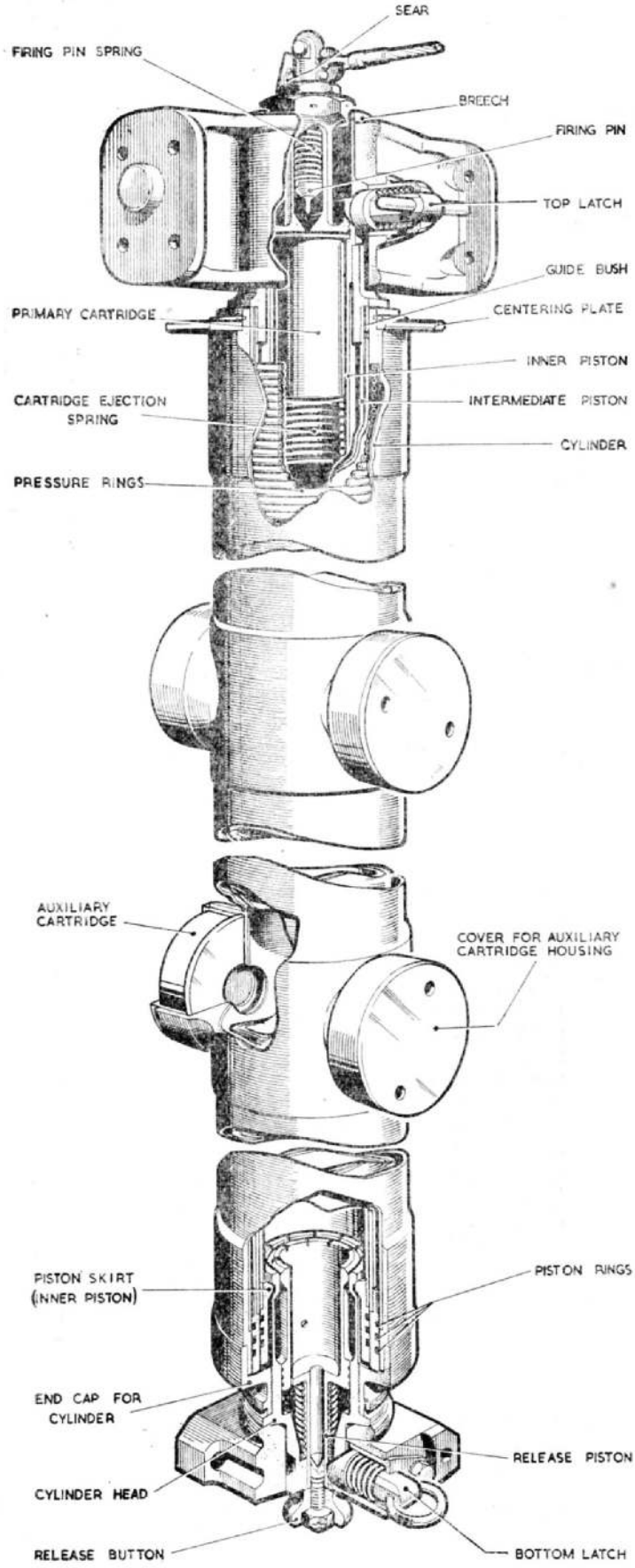

Fig. 1. Ejection gun assembly

wires. The auxiliary cartridges and covers are accessible only after the ejection gun has been removed from the guide rail.

5. The release mechanism at the bottom end of the cylinder tube consists of the release piston, the cylinder head and the inner piston skirt. The two latter are locked together by the release piston which is retained in position by a spring below it. The external ring of the release piston expands the spring tabs of the slotted portion of the cylinder head so that they engage an internal collar in the inner piston skirt. The initial gas pressure causes the release piston to move downwards, thus allowing the locking tabs of the cylinder head to close inwards and disengage the piston skirt. The piston skirt may be unlocked manually by pulling out the release button. Similarly the piston tube can only be returned to the locked position after the release button has been withdrawn.

6. The ejection gun is retained in the bottom mounting block by the bottom latch and can be released by a pull on the ring provided. The top cross-beam of the seat structure is attached to the inner piston tube by the top latch; the seat can be freed from the gun by withdrawing the top latch.

Intermediate piston tube

7. This is of similar construction to the cylinder tube. At its lower end is a piston skirt, provided with three duralumin piston rings, and at the upper end is riveted an internal guide bush. The object of the bush is to keep the inner piston tube steady during its travel. Immediately before the inner piston leaves the intermediate piston, the inner piston skirt butts against the guide bush, so shearing the rivets which retain it, and the guide bush remains with the inner piston.

Inner piston tube

8. This is of similar construction to the intermediate piston tube, but at its upper end is the breech into which is screwed the firing body. Both piston tubes, when withdrawn for servicing purposes, must be handled carefully.

Firing body

9. The breech is permanently screwed into the inner piston tube; it is locked by peening and should not be removed. The breech houses the primary cartridge ejection spring and cartridge which are held in position by the firing body. When unscrewed the firing body gives access to the primary cartridge which is then pushed upwards to facilitate removal.

DROGUE GUN

Function

10. The drogue gun (*fig.* 2) is attached to the port side beam of the seat structure by two quick-release clamps. When the time-delay mechanism is operated by the static rod, after one second's delay the gun is fired and ejects the drogue piston; this extracts the drogues from the container and enables them to develop freely without becoming entangled with the seat. The ejection of the piston is effected by a small cartridge which is fired by the striker pin.

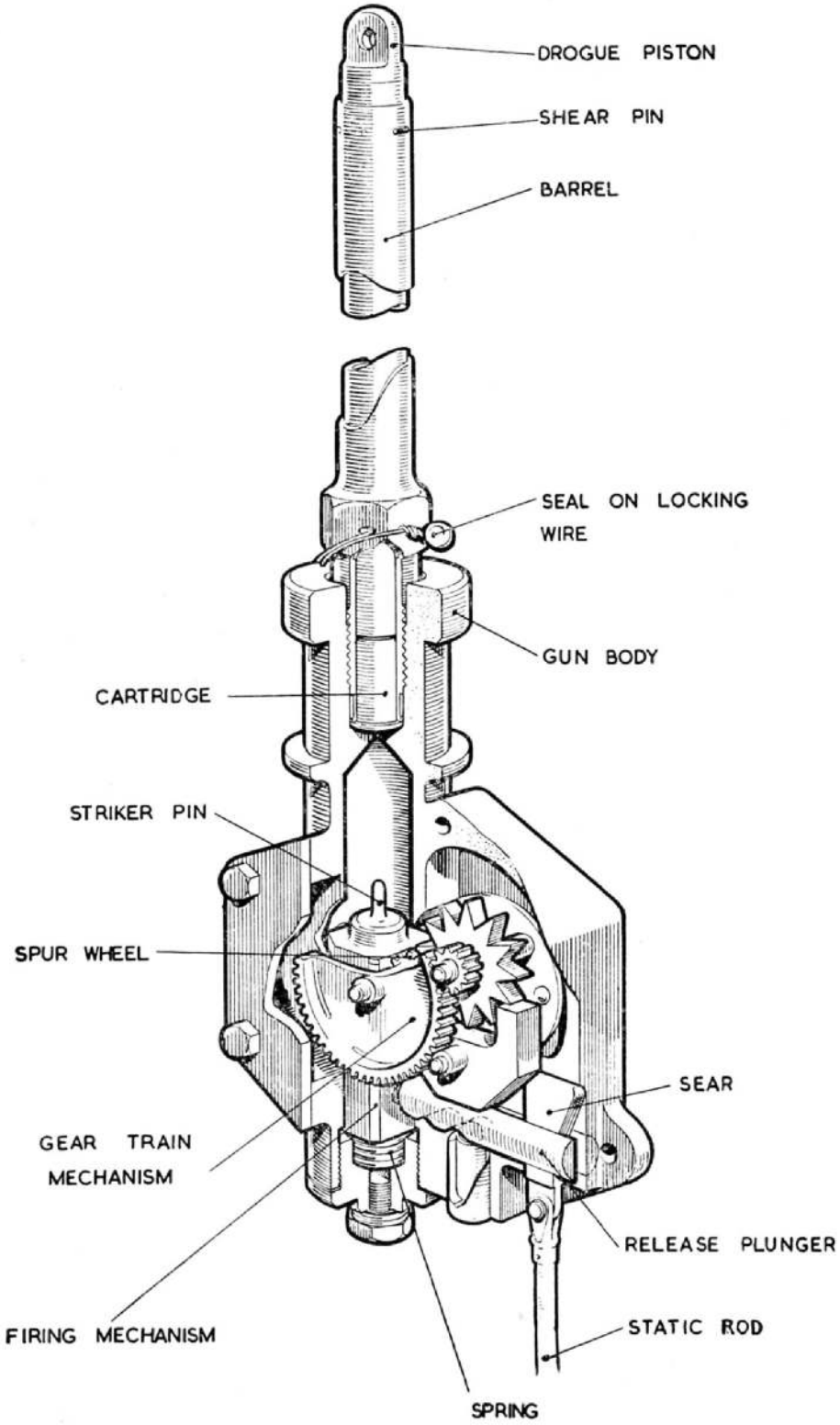

Fig. 2. Drogue gun assembly

Firing mechanism

11. As the seat ascends the guide rail, the static rod withdraws the sear and the release plunger, which allows the gear train to operate under pressure from the spring. After 0·5 second's delay, a rack is disengaged from the spur wheel, thus freeing the striker pin which detonates the cartridge.

Barrel and piston

12. The barrel contains the cartridge (Stores Ref. 12D/1171) which is lightly held in place for convenience by a retaining clip. The barrel, complete with cartridge, screws into the gun body and is secured by 20 S.W.G. non-corrodible steel wire.

13. The drogue piston, to which the drogue withdrawal line is attached by the quick-release pin, is retained in the barrel by a $\frac{1}{16}$ in. split pin which is sheared by the explosion of the cartridge. This shear pin is an essential part of the mechanism of the drogue gun, as the shearing force required allows a definite predetermined pressure to be built up in the gun before the piston starts to leave the barrel. If it were omitted, the drogues would not be withdrawn correctly from the container.

CANOPY JETTISON AND TIME-DELAY UNIT

Function

14. This unit (*fig.* 3 *and* 4) provides the power for jettisoning the canopy and incorporates a time-delay mechanism which fires the main ejection gun approximately 1 sec. after the canopy gun has fired. The gun and delay mechanism are contained in separate compartments within a casing which is bolted to the rear of the guide rail.

Firing mechanism

15. The gun barrel embodies a breech and firing mechanism similar to the main gun, and at its base is a threaded union which, with a soft metal washer, forms a gas tight connection with the pipe leading to piston-type jacks which jettison the canopy.

Time delay-mechanism

16. This mechanism consists of a spring-loaded rack in engagement with a train of gears; the gear train is regulated by an escapement in the form of a star wheel and an oscillating pallet. The operating mechanism is mounted between two lugs integral with the casing and comprises two levers and a pawl free to rotate about shafts in the uncocked condition. When the unit is cocked, the

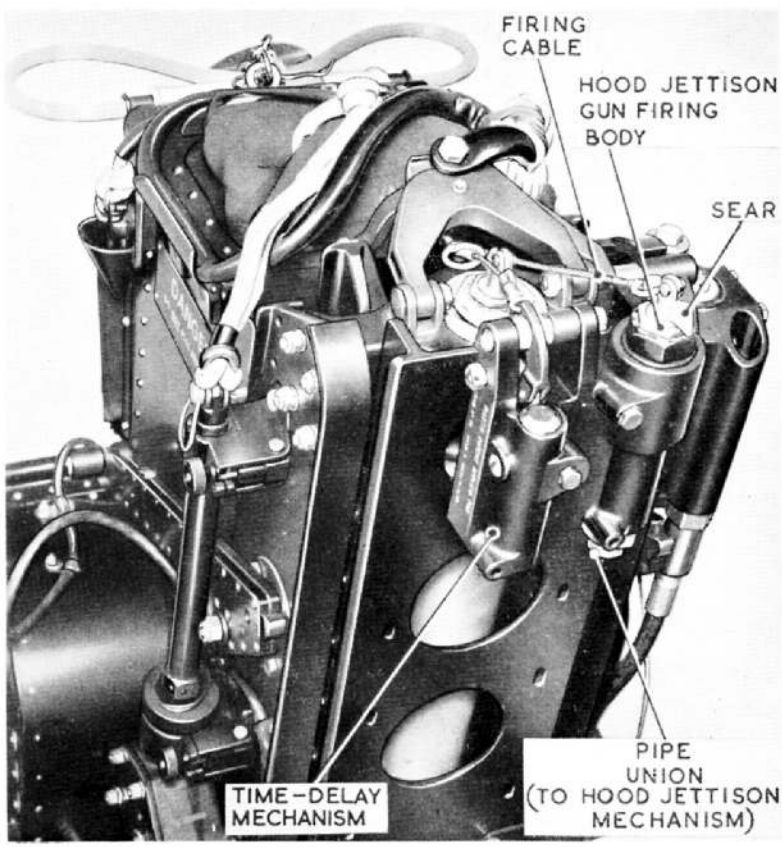

Fig. 3. Canopy jettison and time-delay unit

the trip lever is held in an over-centre position, so restraining any movement of the rack and consequently the gear train. The main sear release lever incorporates an articulated link which engages with the ejection gun sear. The main firing cable from the face screen is bifurcated at the rear of the conduit; one cable is connected to the sear of the canopy gun and the other to the pawl.

Operation

17. When the main firing cable is pulled, the first part of its travel withdraws the sear from the canopy gun firing mechanism, the cartridge is detonated and the gases pass through piping to the two canopy jacks. The second part of the cable travel rotates the pawl which forces the trip lever from its over-centre position; this brings the roller on top of the rack and allows the time-delay mechanism to function. The rack rises under the action of its spring and a cut-away portion of the trip lever boss engages with a cut-away portion of the sear release lever boss. The last part of the lever travel withdraws the sear from the ejection gun firing mechanism, the gun is fired and the seat and occupant are ejected from the aircraft immediately.

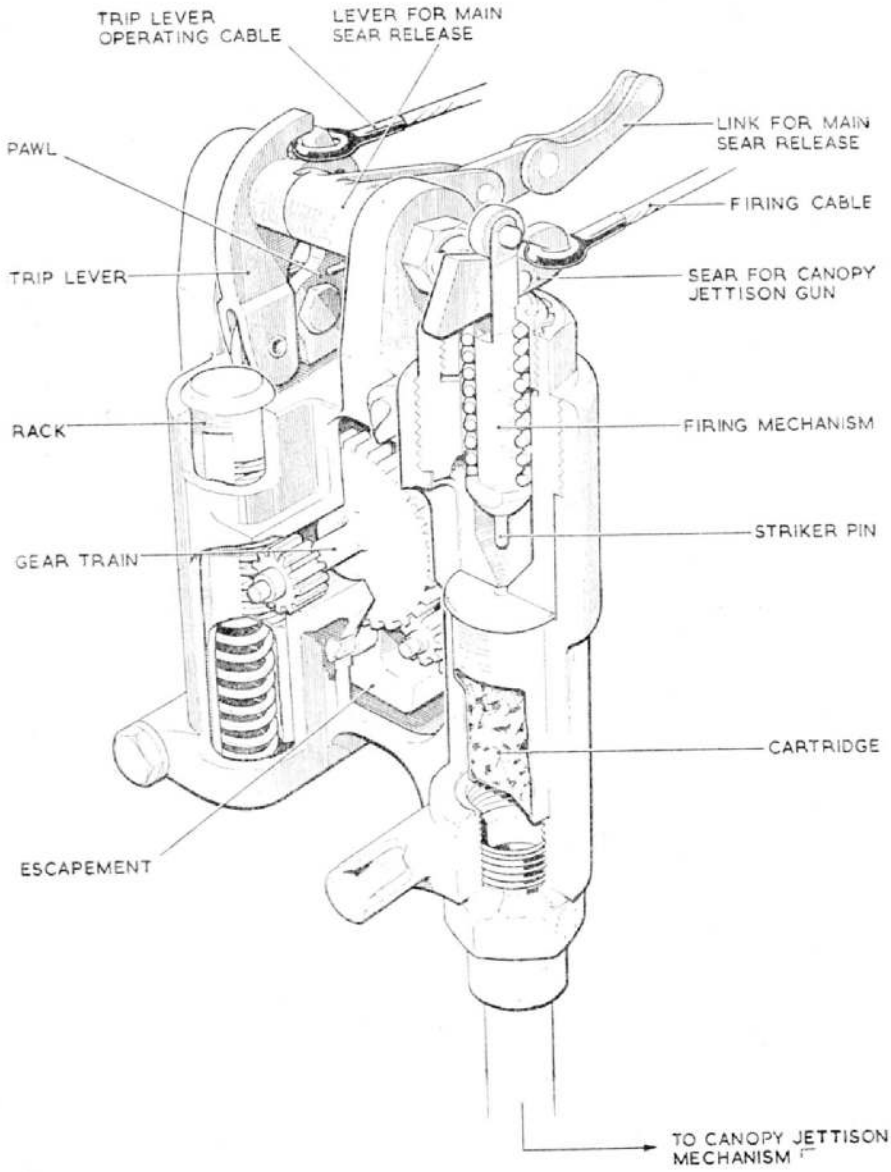

Fig. 4. Details of canopy jettison and time-delay unit

P24925 548022/3677 10/55 1000 C & P Gp. 1

This file was downloaded
from the RTFM Library.

Link: www.scottbouch.com/rtfm

Please see site for usage terms,
and more aircraft documents.