Chapter 3

SEAT STRUCTURE AND GUIDE RAIL

LIST OF CONTENTS

	Para.		Para.
Seat structure	1	*Operation*	12
Barostatic time-release unit	10	*Guide rail*	14

LIST OF ILLUSTRATIONS

	Fig.		Fig.
Seat structure and guide rail	1	*Parachute container*	6
Seat pan	2	*Drogue container*	7
Seat balance spring	3	*Barostatic time-release unit*	8
Details of snubbing unit	4	*Details of time-release unit*	9
Seat raising mechanism	5		

SEAT STRUCTURE

1. The seat structure (*fig.* 1) is made entirely of light alloy. The main frame is built up from a pair of side beams connected at the top by a cross-beam which receives the thrust of the ejection gun piston, and at the bottom by a cross-shaft through which passes the countershaft carrying the seat raising levers and handle.

2. Each side beam carries at its lower end two of the rollers which engage with the guide rail. The upper rollers leave the top of the guide rail at the moment that the intermediate piston tube reaches the end of its stroke.

3. The seat pan (*fig.* 2) is supported on the seat raising levers and restrained at its upper corners by two blocks which slide in guides machined in the side beams. The thigh straps of the safety harness are attached to the seat pan. The front edge of the pan carries the alternative firing handle which is connected by a bowden cable to the canopy and ejection gun firing mechanism. The handle is locked by the same method as that used for the main firing handle, i.e., a strap, safety pin and disc. The weight of the occupant is counterbalanced by two direct acting compression springs (*fig.* 3).

4. The snubbing units (*fig.* 2 *and* 4) are both similar in construction but are handed. Each unit consists of a casing which incorporates a slot through which is passed one of the leg restraining nylon cords. The casing houses a snub lever, a spring tube and a release button. The object of the snubbing unit is to allow the nylon cord to pass freely *down* through the unit, but to lock the cord against any *upward* movement. Thus, during ejection, the cords, which are anchored to the aircraft floor, become taut and pull the seat occupant's legs backwards and together. The lower ends of the cords are anchored by means of deadeyes and brackets; the deadeyes are held in the brackets by light alloy rivets which are stressed to shear at 400 lb. Since the cords cannot pass upwards through the snubbing units, the seat occupant's legs are prevented from being blown apart by the airstream, and are restrained in this position until the safety harness is released. When this occurs, the upper loops of the cords are pulled through the calf strap D-rings, so freeing the legs. The release button is provided to allow the occupant to adjust the cords to give comfortable leg movement.

5. The seat raising mechanism (*fig.* 5) is operated by the seat raising handle; this is hinged and spring-loaded sideways against the side of the seat to reduce the overall width. Depression of the trigger control, through the sear lever and connecting link displaces axially the sear bar. This causes rollers on the pair of spring-loaded plungers to ride up the ramp faces and withdraws the plungers from engagement with the quadrants. Rotation of the countershaft by the handle then raises or lowers the seat. Release of the trigger control allows the plungers to engage the nearest hole in the quadrant and lock the mechanism in the desired position. Five positions are provided, with a total adjustment of 4 in.

6. The parachute container (*fig.* 6) is a riveted sheet metal box hinged at its lower edge to a pair of brackets bolted to the seat beams. The hinge is formed by spring-loaded plungers which are freed by pulling the withdrawal knobs. The container supports the weight of the parachute during flight and takes sideways loads. The parachute lifts easily out of the container when the occupant leaves the seat. The upper edge of the container is secured to a pair of telescopic radius arms the body of each of which is pivoted to the seat beam and the sliding member to the container upper edge.

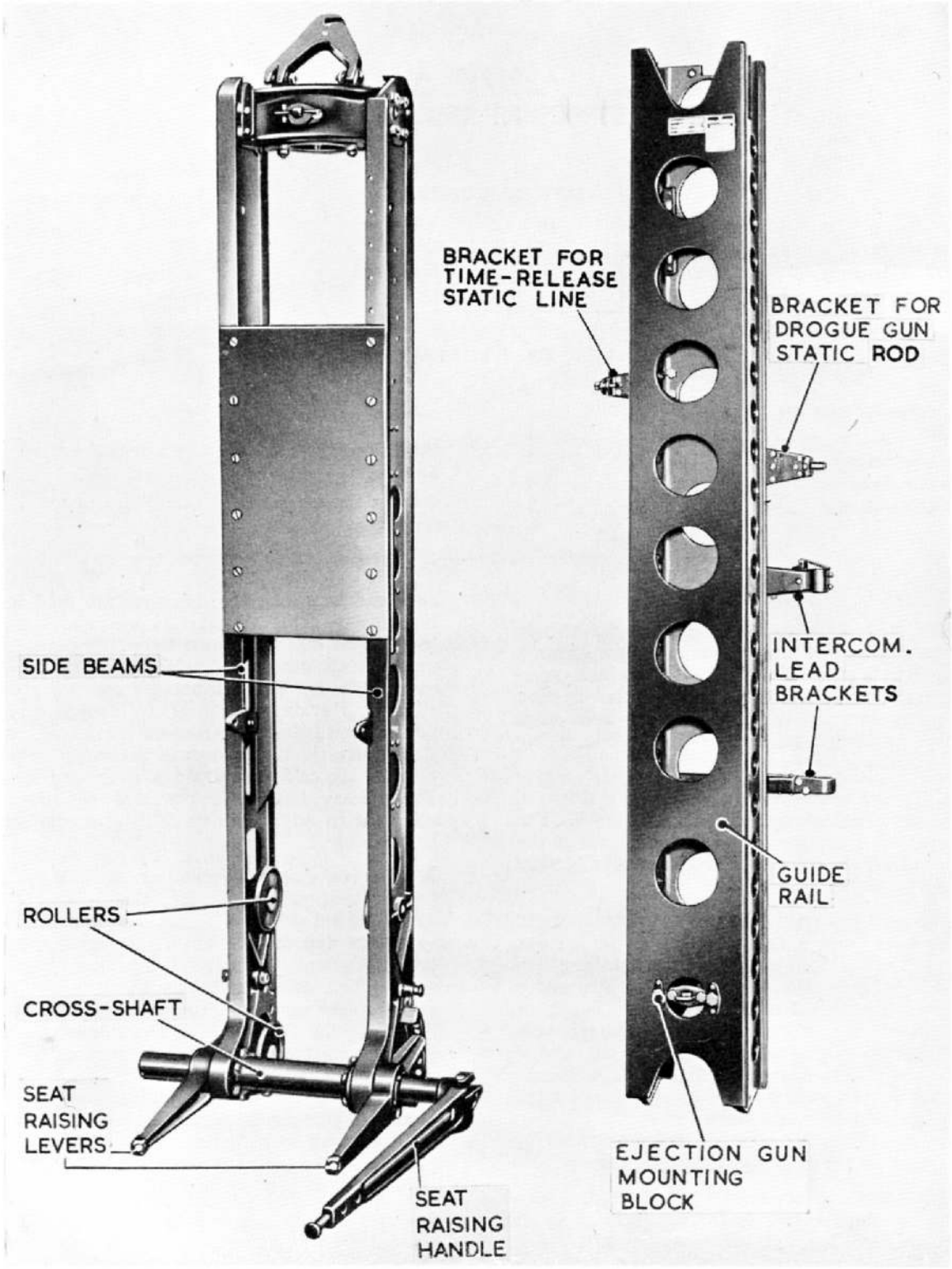

Fig. 1. Seat structure and guide rail

This latter point forms the attachment for the shackle of the Type ZF safety harness shoulder strap. Each sliding member has four notches which may engage with the spring-loaded plunger. Two of these notches are chamfered on their forward faces, so that if the plunger is in either of these notches, the seat occupant can return the container to the next rearward position by leaning back without operating the harness release lever. The spring-loaded plungers are controlled by the levers mounted on the cross-shaft, the starboard lever being operated by the flexible cable from the control lever in the seat pan.

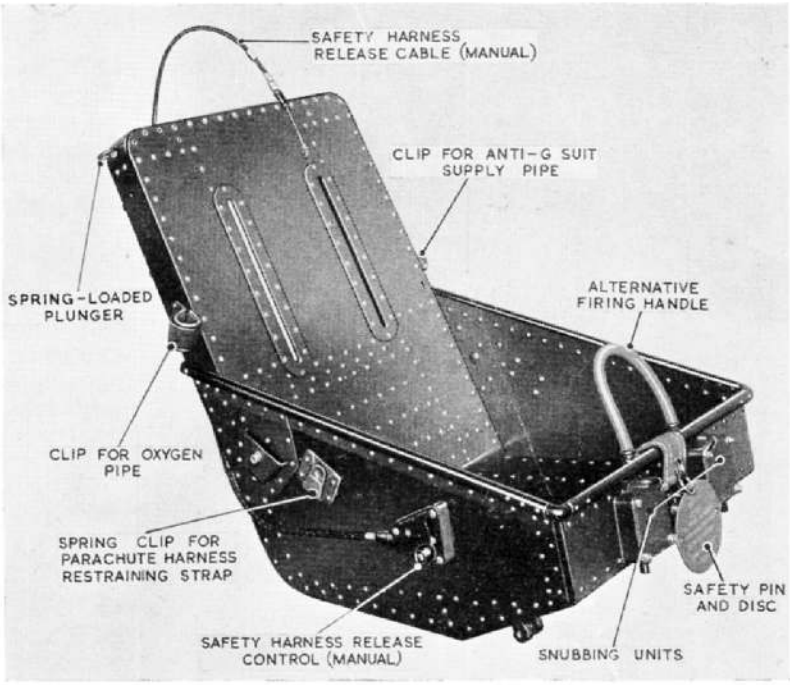

Fig. 2. Seat pan

7. In the position shown in fig. 6, the mechanism is locked right back. The three other notches provide positions of restraint against forward movement, and the unchamfered one against backward movement also. With all the notches forward of the plunger the sliding member moves freely, but is limited in the forward direction by the retaining screw which butts against the edge of the groove in the sliding member. The parachute container embodies clips for restraining the apron and the parachute pack.

8. The drogue container (*fig.* 7) is a riveted sheet metal box mounted at the top of the seat frame. A leather-covered headrest pad is secured to the front of the container by two pins which are withdrawn by the lifting lines after the scissor shackle has opened. The firing handle is attached to the front edge of the face screen. The face screen, which is normally retained folded in the front compartment of the drogue container, is made of lined canvas and is specially shaped to protect the user's face from the air stream and to provide support for the head. The face screen is designed to accommodate a protective helmet. The firing cable is attached to the centre of the face screen by a sewn nylon cord loop and then passes through a conduit to the ejection gun firing mechanism. This conduit prevents the cable from being pulled inadvertently and so firing the gun.

9. The top of the drogue container is closed by four fabric flaps which normally retain the drogues. They are numbered 1 to 4 in the order port, starboard, rear and front.

Barostatic time-release unit

10. This unit (*fig.* 8 *and* 9), mounted at the top of the starboard side beam, is designed to facilitate release of the drogue connection from the seat shackle and to release the safety harness. It incorporates three spring-loaded plungers, two of which serve to actuate the previously mentioned releases. The third one, which is independent of the other two, embodies a rack which is in engagement with a train of gears. This train of gears is regulated by an escapement and star wheel which in turn is governed by a barostat. A short static line to actuate the mechanism is connected to a bracket on the guide rail.

11. The barostat control remains in engagement with the starwheel, thus preventing automatic release from the seat until a safe altitude is reached, i.e., where the effects of annoxia and low temperature have negligible effect; this is at approximately 10,000 ft. On reaching this altitude, the restraint imposed on the star wheel and consequently the time-release mechanism is removed thus allowing it to function in the normal manner and effect release of the occupant from the seat.

Operation

12. As the seat begins to leave the aircraft, the static line extracts the sear from the release plunger which then disengages from the spring loaded primary plunger. The primary plunger commences to rise under the spring pressure; this movement is regulated by the pinion, part of a train of gears terminating in an escapement, in mesh with the rack. After a ~~five~~ three seconds delay, immediately the rack overruns the pinion, a bell crank lever, sliding in a groove in the rack, locates itself in a slot and, as the plunger extends freely, rotates. This movement enables the secondary plunger under spring pressure to descend, and in so doing it removes restraint on the scissor shackle by virtue of the restraining plunger being free to move inwards as indicated by the arrow in fig. 8. The shackle opens and releases the drogue shackle from the seat structure. The release plunger is designed in such a manner that, once withdrawn by the sear, it remains locked in the new position. This arrangement obviates any possibility of the

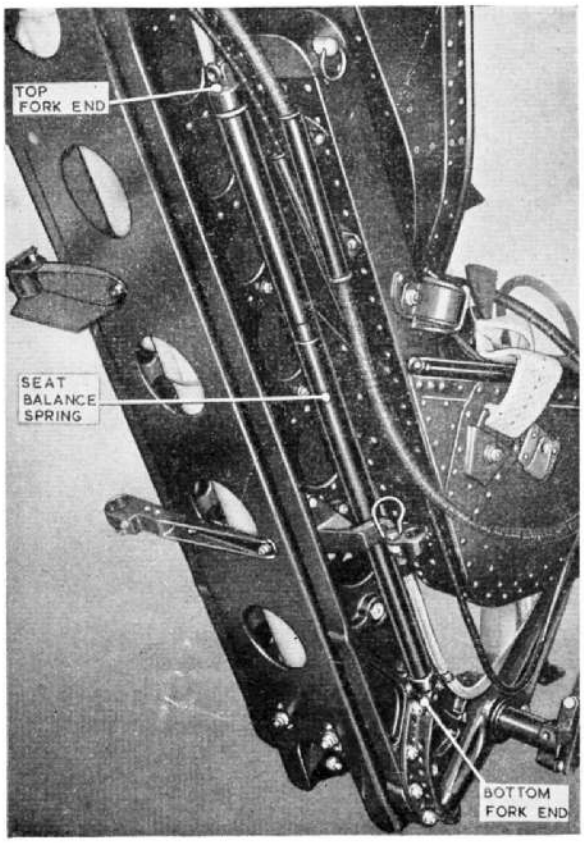

Fig. 3. Seat balance spring

plunger being returned to the closed position by, say, the discarded face screen during descent above the operating height.

13. The downward movement of the secondary plunger frees a pivot which is enabled to rotate under spring pressure. This in turn releases the harness release cable plunger and it is allowed to rise under the action of its spring. A cable integral with the plunger is connected to a lever on the safety harness quick-release fitting, which is then freed.

GUIDE RAIL

14. The guide rail (*fig.* 1) consists of a single extrusion bolted to the aircraft structure and normally it should not be necessary to remove it. Built into it towards its lower end is a block which receives the thrust of the ejection gun cylinder and incorporates the bottom latch which retains the cylinder tube. The slots in the upper end of the guide rail receive the cross-beam and restrain the forward impulse of the seat in the event of a crash landing.

15. Four brackets are bolted to the rear of the guide rail; the static lines for the drogue gun and barostatic release unit are attached to the upper two, and the lower two house the intercom. lead. The upper rear face of the guide rail is shaped and drilled to accommodate the canopy jettison and ejection gun firing mechanism.

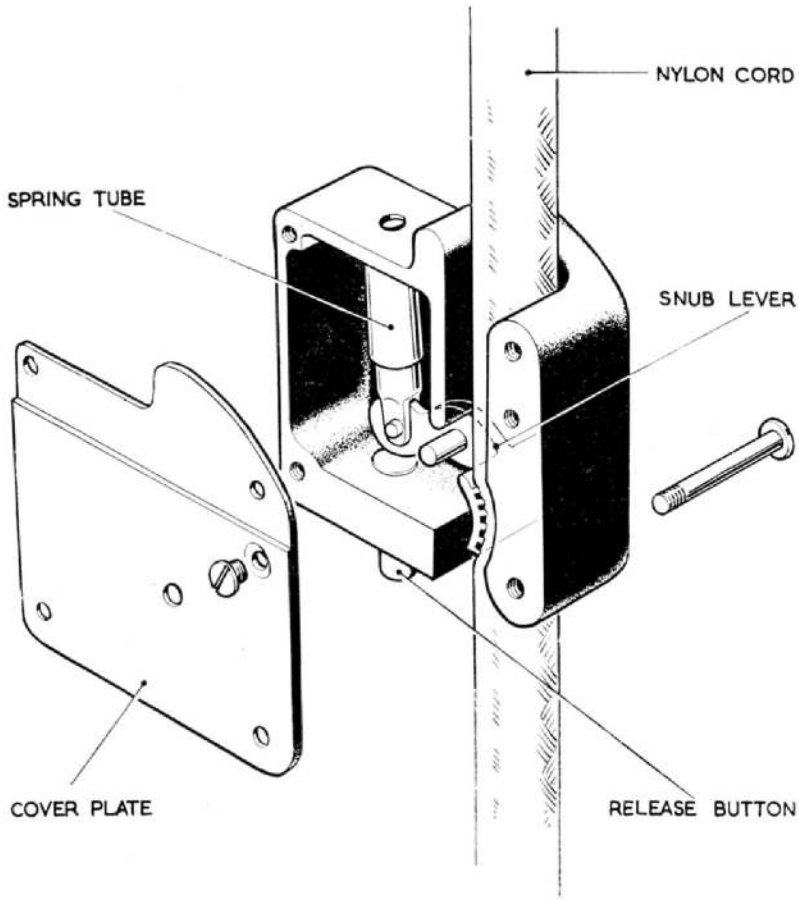

Fig. 4. Details of snubbing unit

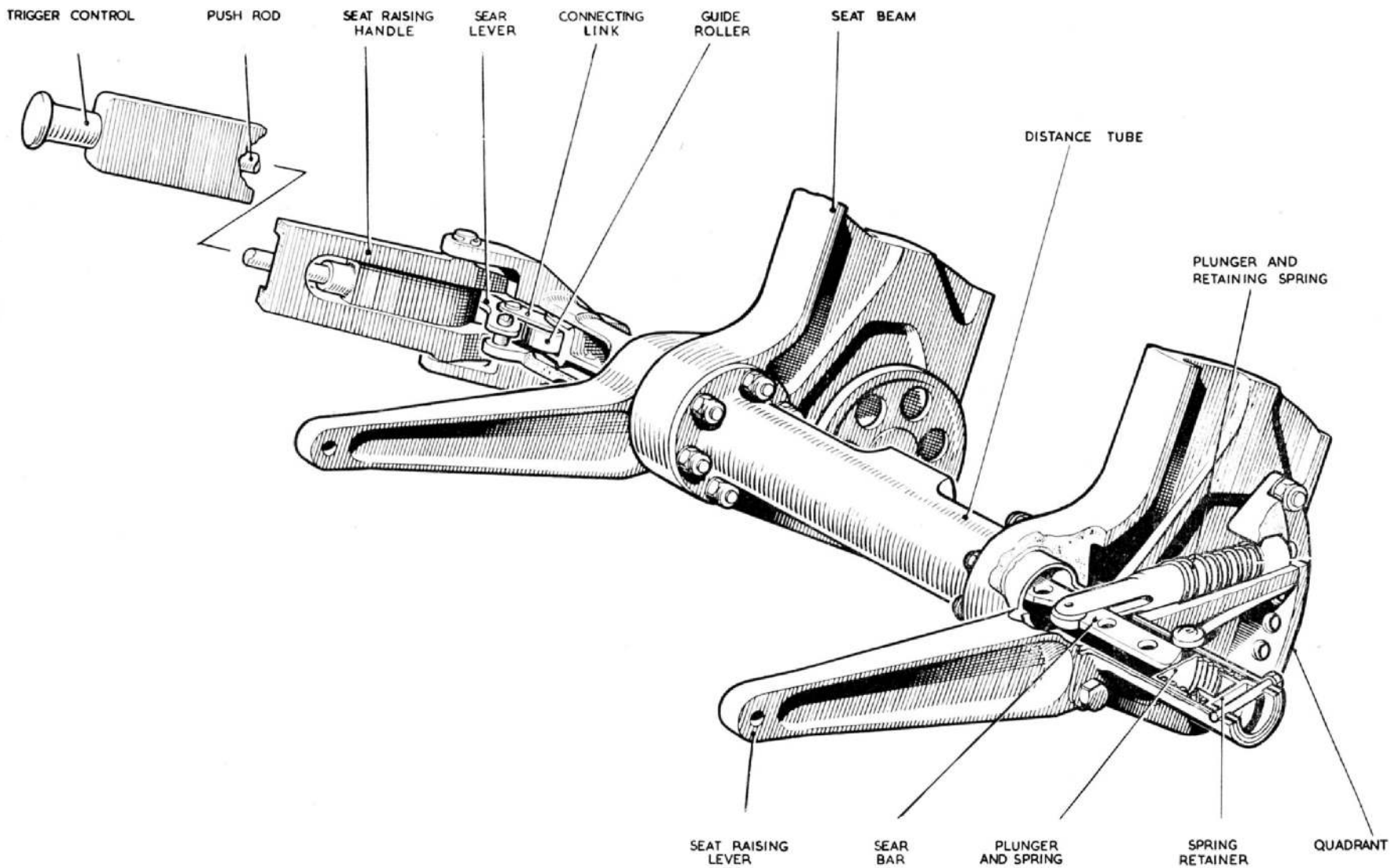

Fig. 5. Seat raising mechanism

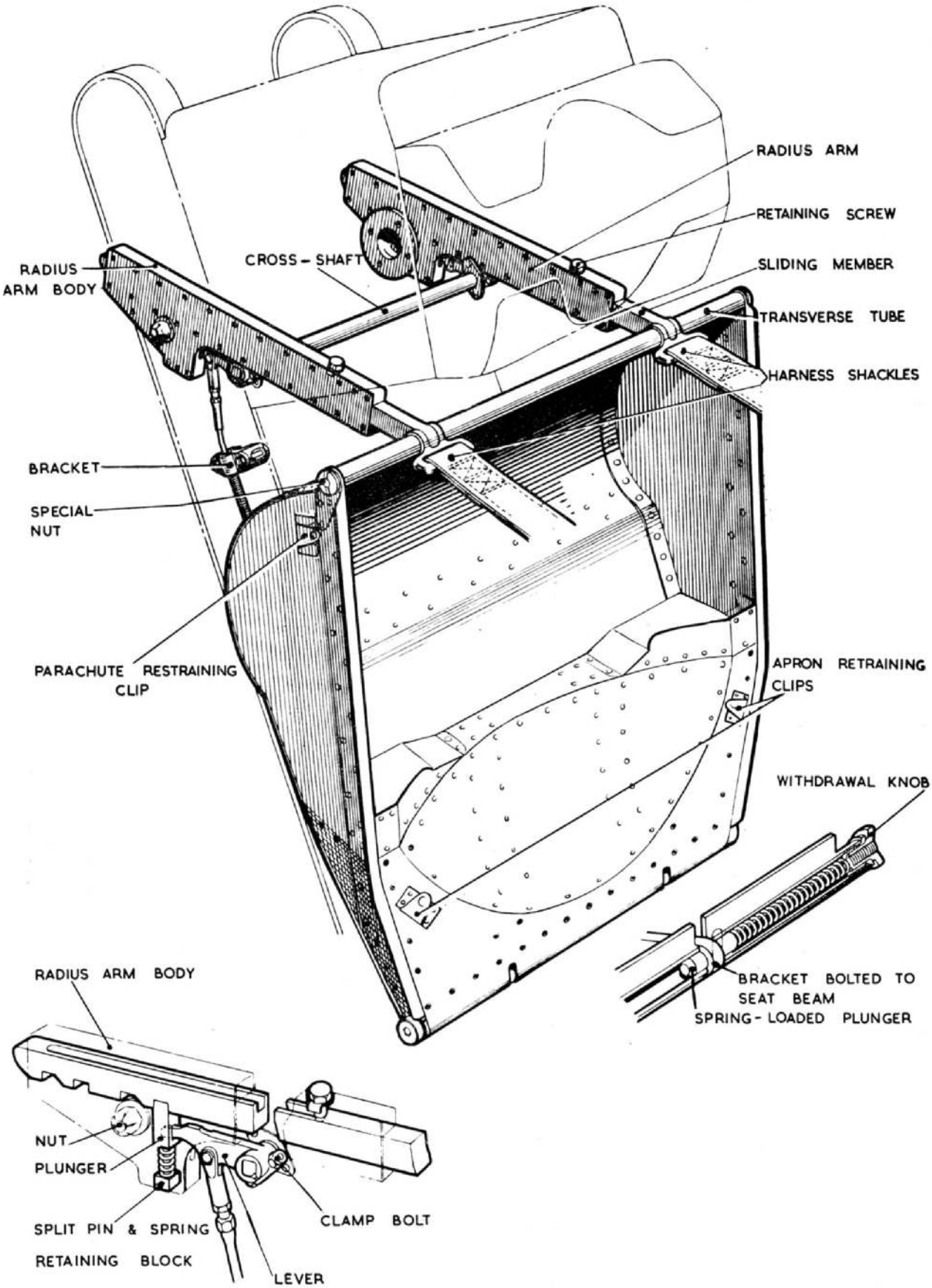

Fig. 6. Parachute container

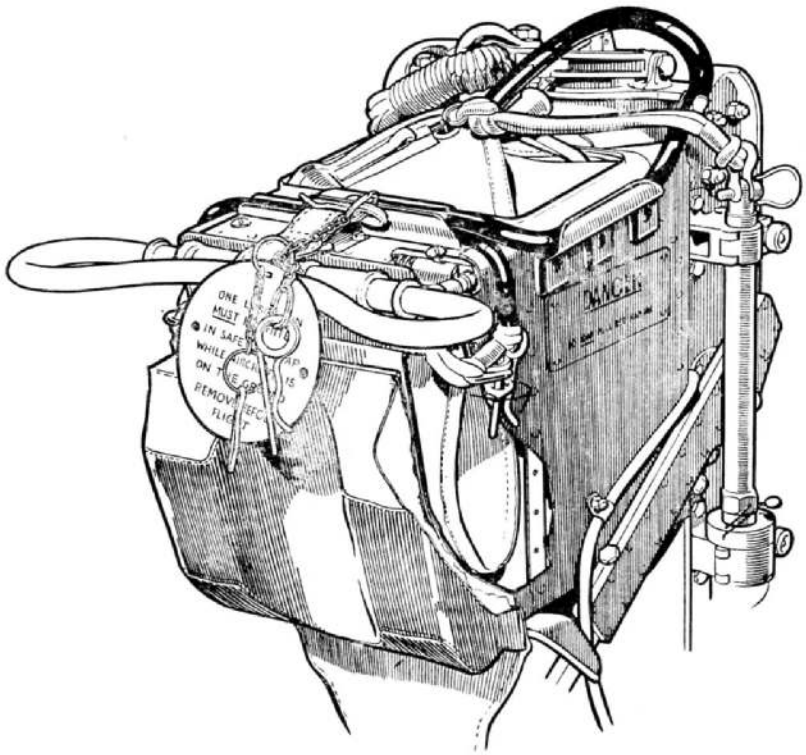

Fig. 7. Drogue container

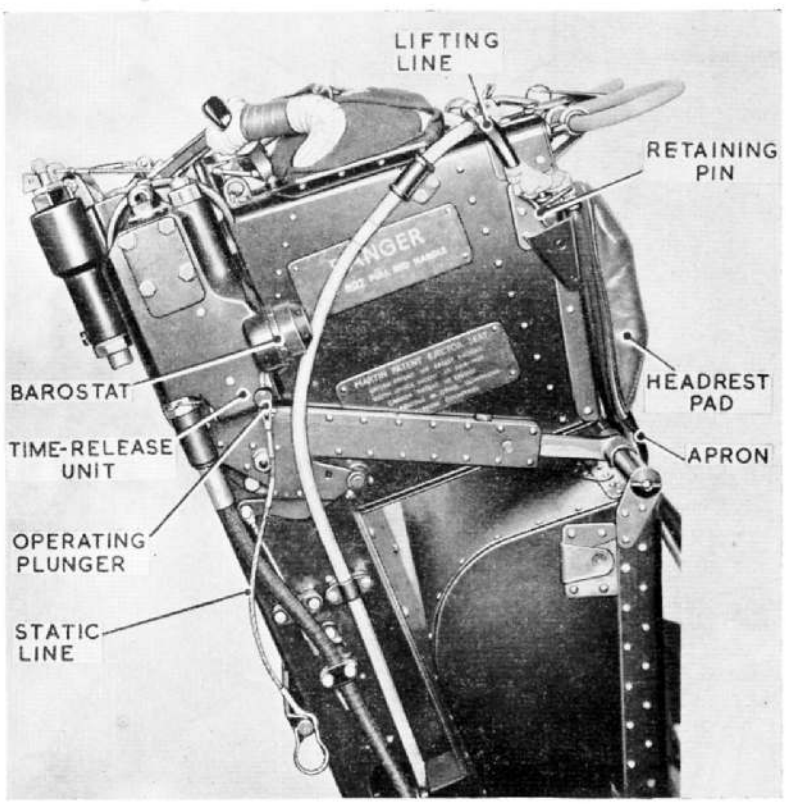

Fig. 8. Barostatic time-release unit

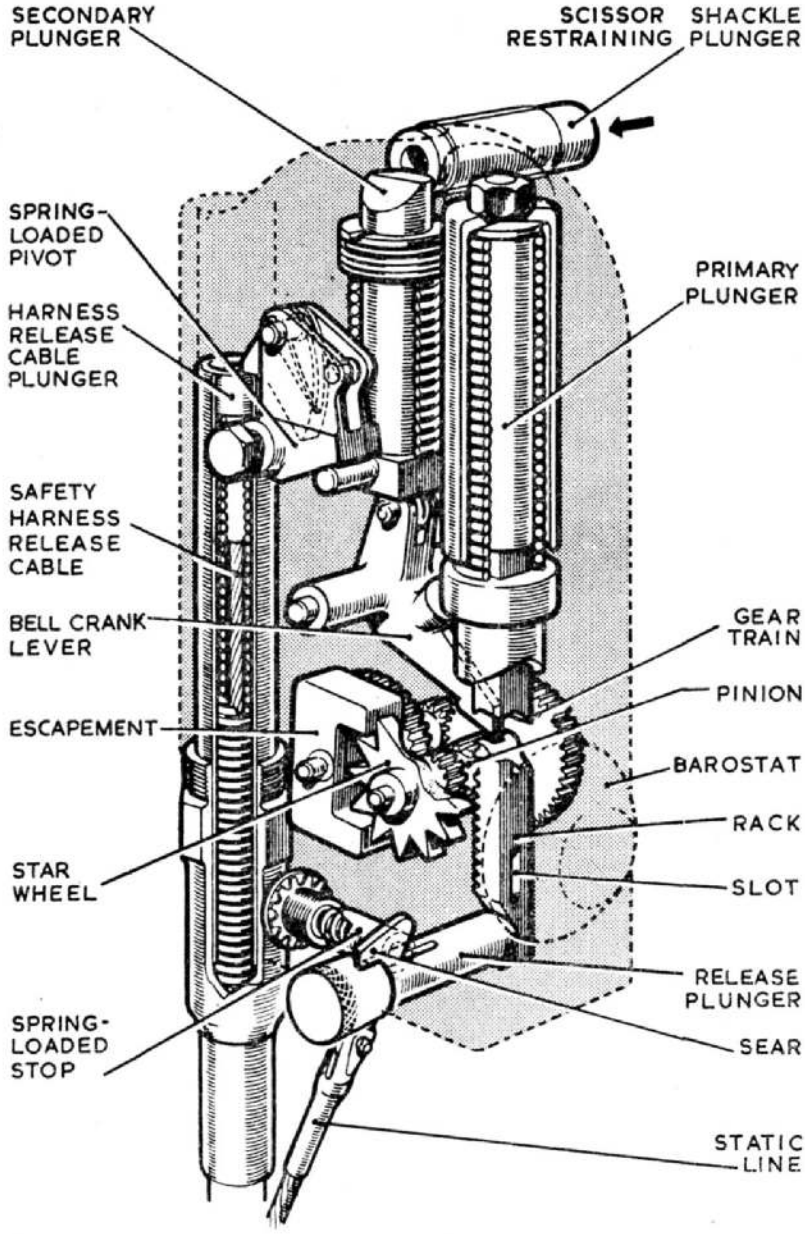

Fig. 9. Details of time-release unit

P24779 541893/3014 9/55 1000 C & P Gp. 1
C (AL20)

/

This file was downloaded
from the RTFM Library.

Link: www.scottbouch.com/rtfm

Please see site for usage terms,
and more aircraft documents.