Chapter 5
SERVICING

LIST OF CONTENTS

	Para.
Special tools	1
Removing the primary and canopy gun cartridges	2
Removing the drogue gun from the seat	3
Removing the seat from the aircraft	4
Removing the ejection gun from the guide rail	5
Removing the auxiliary cartridges	6
Servicing the ejection gun	
To extend the piston tubes from the cylinder tube	7
To remove the release mechanism from the cylinder tube	8
To examine the release mechanism	9
To examine the firing mechanism	10
To assemble the release mechanism in the cylinder tube	11
To examine and assemble the piston tubes	12
Servicing the drogue gun	
To remove the drogue gun cartridge	13
To examine the firing mechanism	14
To re-set the time-delay mechanism	15
To assemble the drogue gun	16
Servicing the canopy jettison and time-delay unit	
To examine the firing mechanism	17
To test and re-set the time-delay mechanism	18
Servicing the seat structure	
To remove the seat pan	19
To remove and dismantle the parachute container radius arms	20
To examine and assemble the parachute container radius arms	21
To dismantle the seat raising mechanism	22
To examine the seat raising mechanism	23
To assemble the seat raising mechanism	24
To fit the seat pan	25
Testing the lifting lines	26
Fitting the lifting lines	27
Servicing the barostatic time-release unit	28
To fit and re-set the time-release unit	29
Servicing the face screen and drogues	
To test the face screen	30
To examine the face screen	31
To pack the face screen	32
To examine the drogues	33
To pack the drogues	34
To examine the leg restraining device	35
Fitting the auxiliary cartridges	36
Fitting the ejection gun in the guide rail	37
Installing the seat in the aircraft	38
Fitting the drogue gun	39
Fitting the canopy jettison and primary cartridges	40

LIST OF ILLUSTRATIONS

	Fig.
Special tools	1
Disconnecting firing cables from sear	2
Drogue gun safety lock	3
Drogue gun assembly	4
Top latch safety pin	5
Removing auxiliary cartridges	6
Removing cylinder head	7
Dismantling release piston	8
Lifting firing pin with special tool	9
Testing firing spring	10
Ejection gun components	11
Examining intermediate piston tube rings	12
Examining inner piston tube rings	13
Re-setting drogue gun time-delay mechanism	14
Re-setting the canopy jettison and time-delay unit	15
Testing the lifting lines	16
Fitting the lifting lines	17
Re-setting barostatic time-release mechanism	18
Testing the face screen	19
Stowing the drogues	20
Connecting firing cable	21

Special tools (*fig. 1*)

1. The following is a list of the special tools required for servicing the ejection seat:—

Tool	Stores Ref. No.	Purpose
Combination spanner	27L/353	Access to primary cartridge
Spanner, auxiliary cartridge	27L/470	Access to auxiliary cartridges
Pressers sealing pliers	1B/4122	Sealing locking wires securing primary canopy jettison and auxiliary cartridge covers
Firing pin lifting tool	27L/98	Lifting firing pin of primary and canopy jettison firing mechanisms.
Blocks, clamp	27L/486	Gripping cylinder tube in vice jaws
Spanner, release piston	27L/96	Restraining the release piston
Spanner, "C" (2 off)	27L/95	Removing and assembling cylinder head
Protrusion gauge	27L/186	Testing the firing pin protrusion of the primary and canopy jettison firing units; testing the efficiency of the drogue gun cartridge retaining clip
Harness release plunger tool	27L/271	Re-setting the barostatic time-release unit
Rack plunger tool	27L/272	Re-setting the barostatic time-release unit
Drogue gun cocking tool	27L/273	Re-setting drogue gun time-delay mechanism
Canopy jettison unit cocking tool	27L/534	Re-setting the time-delay mechanism

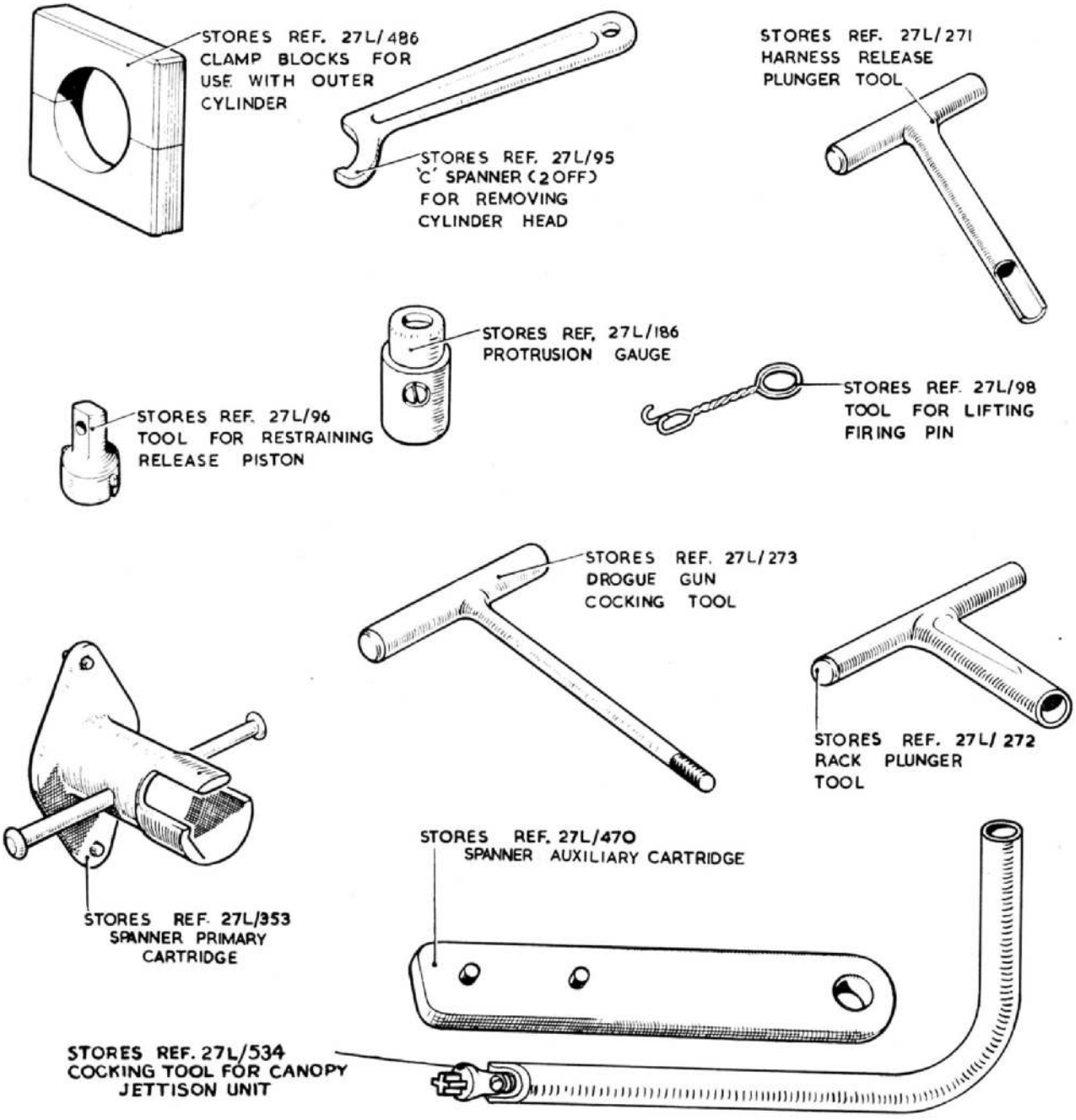

Fig. 1. Special tools

Removing the primary and canopy gun cartridges

IMPORTANT

The primary and the canopy gun cartridges and the drogue gun MUST be removed before the seat is lifted from the aircraft.

2. (1) Insert the small safety pin through the hole in the red painted lugs on the trip lever of the canopy jettison and time delay unit and a large safety pin in each of the firing sears (1, *fig.* 2).

(2) Ease the ejection gun sear forward by hand (2, *fig.* 2) and disengage the articulated link from the sear.

(3) Ease the jettison gun sear forward by hand (3, *fig.* 2) and disconnect the firing cable.

WARNING

In no circumstances must the sears be extracted while the cartridges are in position. Any attempt to do so will result in a cartridge being fired. In the case of the main gun, the seat will be ejected with dire consequences

(4) Remove the safety pins from both sears (4, *fig.* 2). Break the sealed locking wire on the ejection gun firing body and fit the special spanner. Remove the safety pin and unscrew the firing body from the breech. The primary cartridge will be pushed upwards by the spring which should be removed with the cartridge; loosely replace the firing body to exclude dust.

(5) Break the sealed locking wire on the canopy jettison gun firing body and fit the special

EJECTION SEATS, R.A.F. AIRCRAFT,
Mk.3 SERIES

ADVANCE INFORMATION LEAFLET No.1/56

INSERT THIS LEAF OPPOSITE THE PAGE AFFECTED

SECTION 6

Chapter 5, Para.2,
WARNING

1. If the safety pin were withdrawn from the ejection gun sear with the canopy jettison and time-delay unit tripped, the ejection gun primary cartridge would be fired.

2. Before attempting to disarm the seat therefore (particularly after a crash), first check that the mechanism has not been tripped. This will be readily seen, since approximately $1\frac{1}{2}$ in. of the rack will be visible above the body. If this has happened, re-cock the unit before withdrawing any of the safety pins.

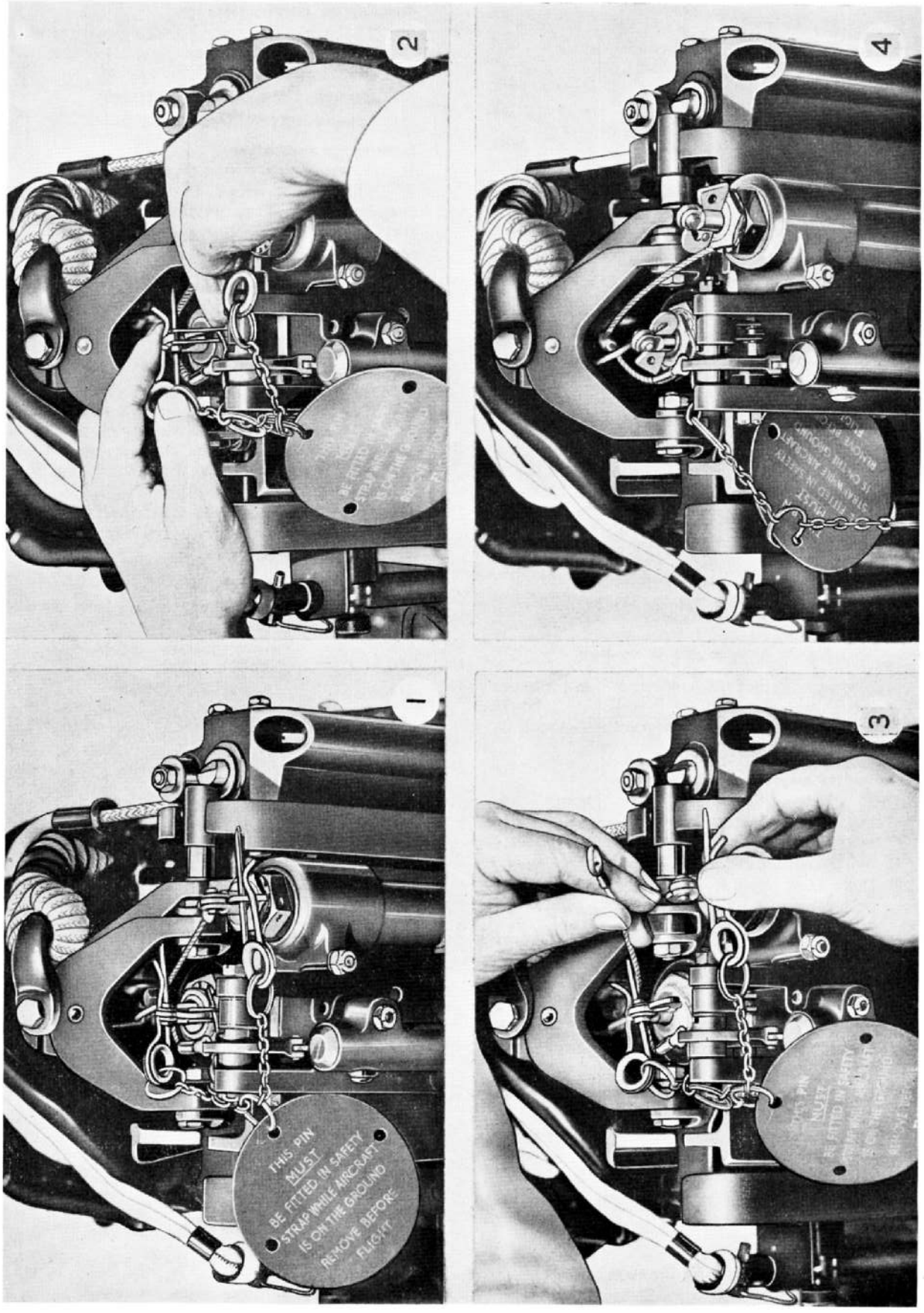

Fig. 2. Disconnecting firing cables from sear

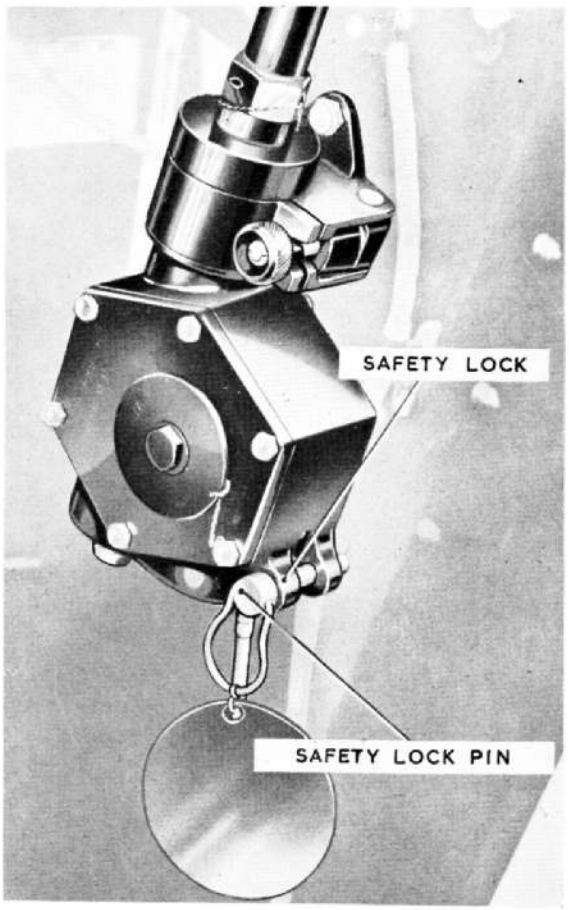

Fig. 3. Drogue gun safety lock

spanner. Remove the safety pin and unscrew the firing body from the breech. Remove the cartridge and loosely replace the firing body to exclude dust.

Removing the drogue gun from the seat

3. (1) Render the gun safe by inserting the locally manufactured safety lock pin in the safety lock (*fig.* 3). Disconnect the static rod by withdrawing the quick release pin.

(2) Disconnect the drogue withdrawal line by pulling out the quick release pin which attaches it to the drogue gun piston.

(3) Operate the two quick release clamps (*fig.* 4) and lift out the drogue gun.

Removing the seat from the aircraft

4. (1) Remove the parachute and dinghy pack.

(2) Disconnect the intercom. lead and the main and emergency oxygen connections.

(3) Disconnect the barostatic time release unit static line from the bracket on the guide rail.

(4) Disconnect the leg restraining cords by removing the two quick-release pins from the brackets on the cockpit floor.

(5) Withdraw the safety pin from its housing (*fig.* 5), release the top latch and lift the seat up the guide rail.

Removing the ejection gun from the guide rail

5. Draw out the bottom latch by the ring, and lift out the gun, taking care not to damage the cylinder tube by allowing it to strike the walls of the guide rail or any part of the aircraft.

Removing the auxiliary cartridges

6. (1) Break the sealed locking wire and unscrew each auxiliary cartridge cover, using the special spanner provided (*fig.* 6).

(2) Remove the auxiliary cartridges.

(3) Loosely replace the covers to exclude dust.

Servicing the ejection gun

To extend the piston tubes from the cylinder tube

7. Pull out the release button to its full extent then ease the intermediate and inner piston tubes from the cylinder tube; *make no attempt to separate them from each other.*

To remove the release mechanism from the cylinder tube

8. (1) Grip the cylinder tube in the special clamp blocks (*fig.* 7), remove the locking wire and unscrew the cylinder head, using the special C-spanner provided. Do not remove the end cap from the cylinder tube.

(2) Remove the lock-nut in the release button with a $\frac{5}{16}$ in. B.S.F. box-spanner, at the same time restraining the release piston from turning by engaging the special tool in the slots provided (*fig.* 8).

(3) Pull off the release button; the release piston and spring can then be withdrawn from the cylinder head.

To examine the release mechanism

9. (1) Check that all parts are free from corrosion.

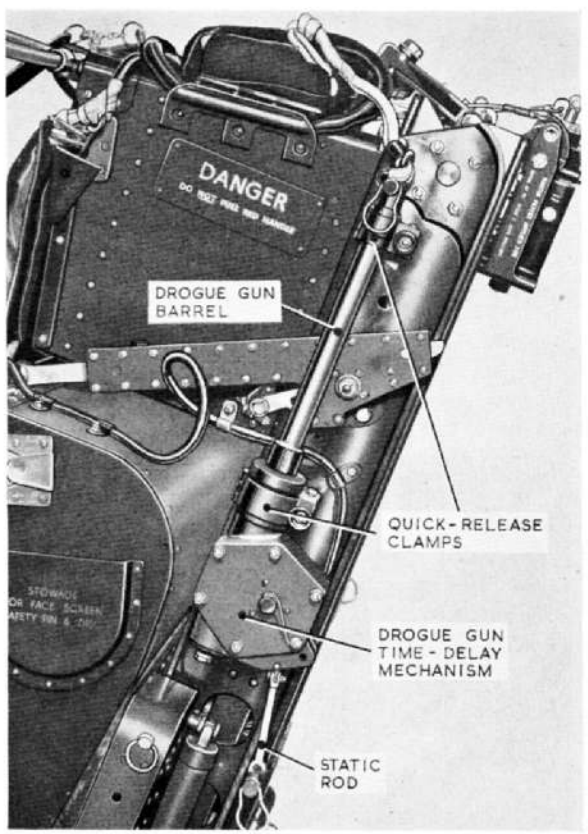

Fig. 4. Drogue gun assembly

(2) Check that the locking tabs on the cylinder head are undamaged.

(3) Check that the release piston slides freely in the cylinder head and that the drain holes in the piston and cylinder head are clear.

To examine the firing mechanism

10. (1) With the firing pin in the fired position, place the protrusion gauge in position in the firing unit. If the plunger is flush with, or above, the level of the body the protrusion is correct.

(2) Remove the firing pin from the firing body. Using kerosine, wash any traces of grease from the firing pin and the interior of the firing body, then lightly lubricate with oil OM–13 (Stores Ref. 34B/43). Assemble the firing pin in the firing body.

(3) Lift the firing pin with the special tool (*fig.* 9) and check that the firing sear moves freely in the slot, and that the firing pin moves freely throughout its stroke. Remove the sear and check the initial compression of the firing spring by spring balance as shown in fig. 10. The firing pin should not start to move until 7 lb. is registered. The initial movement of the firing pin can be detected by holding the finger over the projecting end of the striker pin.

(4) If the action of the firing pin when checked as described in sub-para. (3) is unsatisfactory, the retaining nut (*fig.* 11) should be unscrewed with a $\frac{3}{8}$ in. box spanner, after the tab of the brass locking washer is bent down, and the firing pin assembly should be renewed complete with a new locking washer. Ensure that the locking washer tab already bent down engages the slot in the top of the firing body, and after the retaining nut has been firmly screwed down, one of the other tabs should be bent up to lock it.

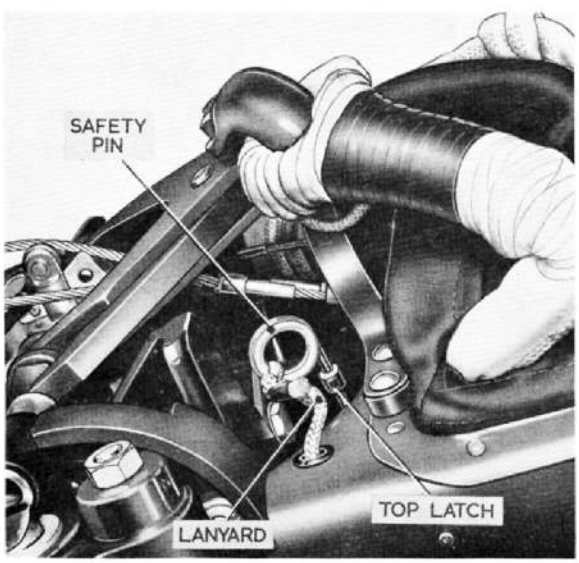

Fig. 5. Top latch safety pin

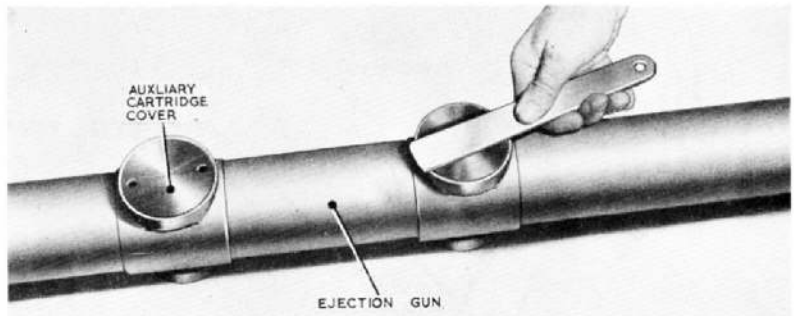

Fig. 6. Removing auxiliary cartridges

(5) Repeat the checks described in sub-para. (3)

To assemble the release mechanism in the cylinder tube

11. (1) Apply a coat of grease XG–275 (Stores Ref. 34B/222) and assemble the release piston and spring into the cylinder head, using the special spanner.

(2) With the piston tubes withdrawn from the cylinder tube, screw the cylinder head back, using the special C-spanners.

(3) Lock with new 22 S.W.G. non-corrodible steel locking wire.

To examine and assemble the piston tubes

12. (1) Gently extend the intermediate piston tube until the piston rings can be seen through one of the auxiliary cartridge housings (*fig.* 12).

(2) Examine the piston rings for damage by gently rotating the intermediate piston tube and watching the rings through the aperture.

(3) Apply a coat of grease XG–275 to the piston rings, then remove all trace of grease from the housing.

(4) Gently extend the inner piston tube until the piston rings can be seen through one of the flash holes (*fig.* 13).

(5) Examine and lubricate the inner piston rings by repeating actions (2) and (3).

(6) Gently ease in the inner piston tube until it is fully home in the intermediate piston tube.

(7) Pull out the release button but do not release it until the piston tubes have been pushed right home. When the release button is freed, the piston tubes should be found to be locked into the cylinder tube against withdrawal. On no account should the piston tubes be allowed to bottom hard before the release button is withdrawn, or the cylinder head locking tabs will be damaged.

Servicing the drogue gun

To remove the drogue gun cartridge

13. (1) Ensure that the safety lock pin is in position. Break the sealed locking wire and unscrew the barrel, using a $\frac{7}{16}$ in. Whitworth spanner.

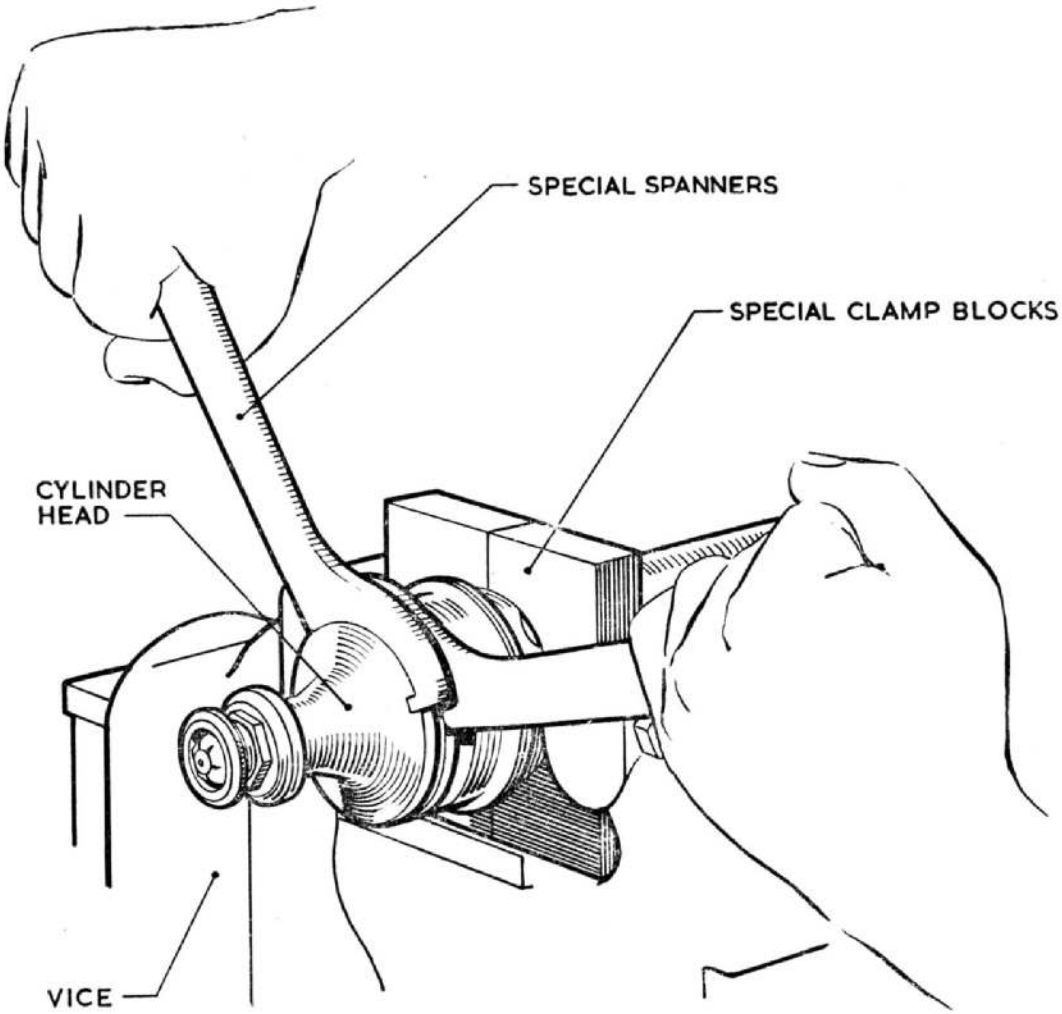

Fig. 7. Removing cylinder head

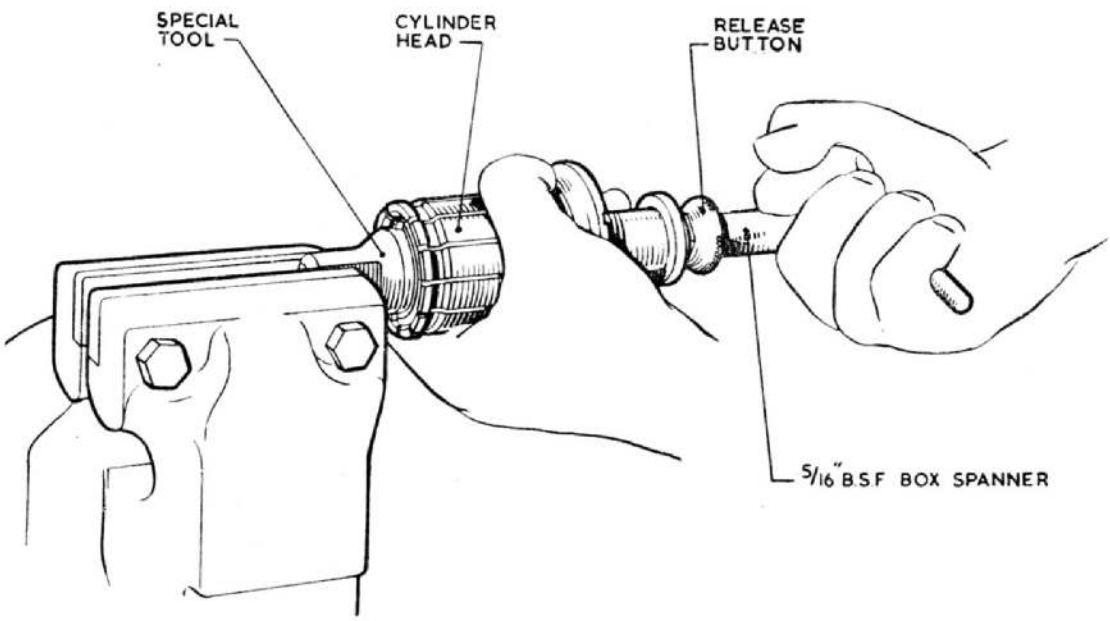

Fig. 8. Dismantling release piston

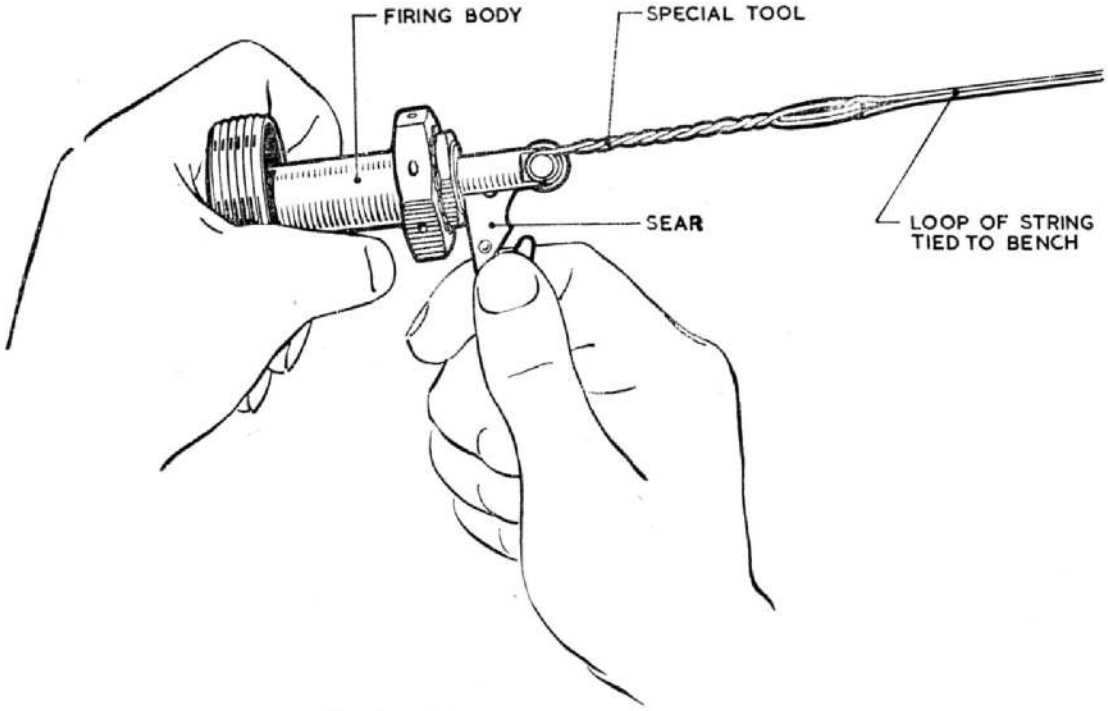

Fig. 9. Lifting firing pin with special tool

(2) Pull out the cartridge.

To examine the firing mechanism

14. (1) Withdraw the quick-release pin from the safety lock, pull out the sear and check the mechanism for correct functioning. Check the timing by stop watch; it should be ~~0·25 sec.~~ ½ sec ± 1/10 sec

Ak. 30

(2) Test the firing spring with the mechanism in the fired position by applying a spring balance to the handle of the cocking tool; it should not move at less than $10\frac{1}{2}$ lb.

(3) Test the firing pin protrusion; it should not be less than $\frac{3}{32}$ in.

(4) If the firing mechanism fails any of the tests given in sub-para. (1) to (3) it should be renewed.

To re-set the time-delay mechanism

15. (1) Insert the sear and depress the plunger until it locks in position.

(2) Remove the stud at the bottom of the casing (*fig.* 14).

(3) Insert the cocking tool into the stud hole, screw to the right and then pull downwards until the gear train stops revolving.

(4) Replace the stud and insert the quick-release pin in the safety lock.

To assemble the drogue gun

16. (1) Ensure that the safety lock pin is in position. Insert the cartridge into the barrel and screw the barrel into the firing body firmly, using a $\frac{7}{16}$ in. Whitworth spanner.

IMPORTANT

Ensure that the top edge of the gun body is level with or above the scribed line on the barrel. If the scribed line has been obliterated, proceed as follows:—

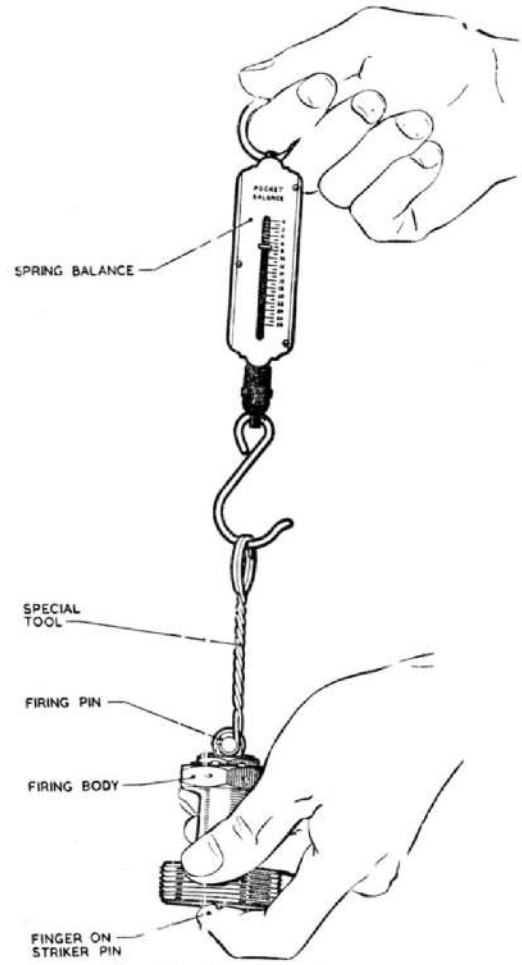

Fig. 10. Testing firing spring

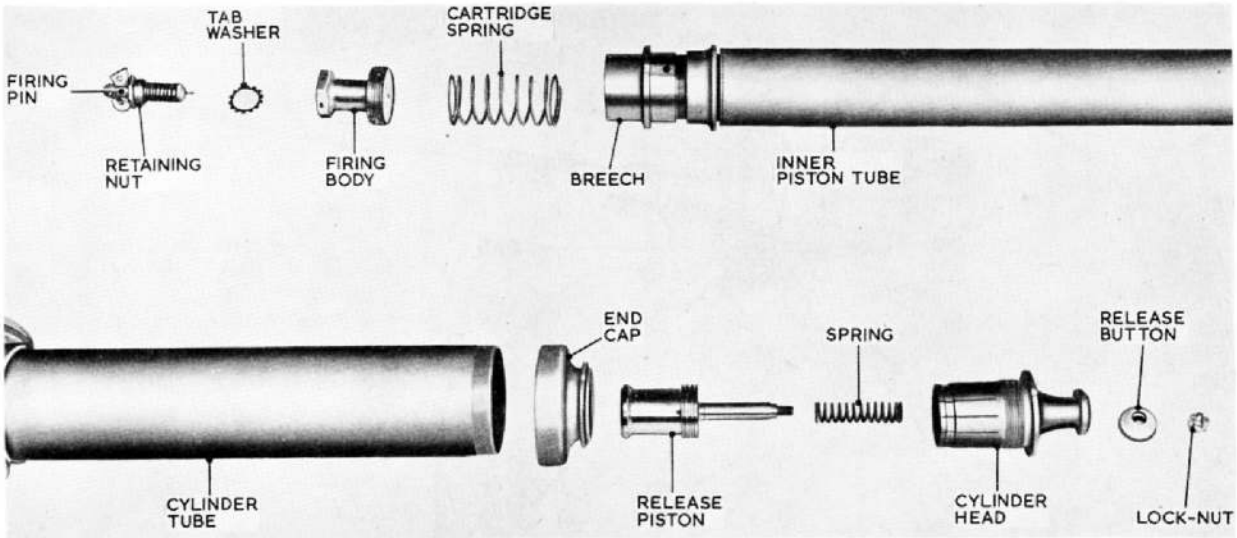

Fig. 11. Ejection gun components

(a) *Measure the distance internally between the cartridge seating and the upper edge of the gun body.*

(b) *Subtract from this distance the thickness of a cartridge rim, and then measure the remaining distance from the lower edge of the gun barrel. Scribe a line on the exterior of the barrel at this distance; extend the line all round the circumference of the barrel.*

(c) *Fit the drogue cartridge and screw down the barrel. If the top edge of the gun body is not level with or above the scribed line after tightening fully, dismantle the gun, re-check the measurements and, if necessary, scribe a new line.*

(d) *Make an entry in the Aircraft Servicing Form 700*

(2) Lock with new 20 S.W.G. non-corrodible steel wire and seal (Stores Ref. 29H/1761), using the special pliers.

(3) Replace the piston, which should be lightly wiped with grease XG–275, and insert a $\frac{1}{16}$ in. A.G.S. 166/3 split pin in one of the holes provided.

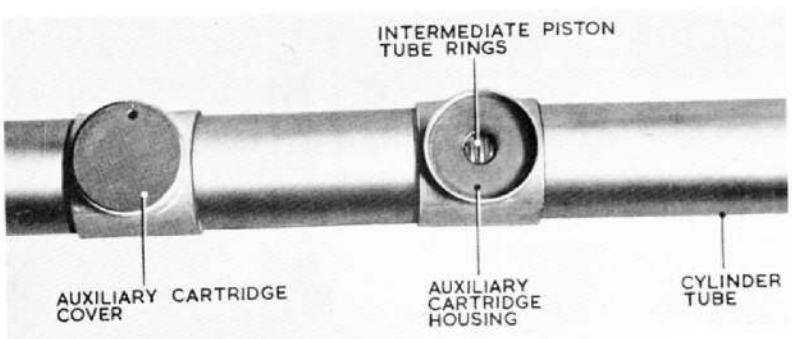

Fig. 12. Examining intermediate piston tube rings

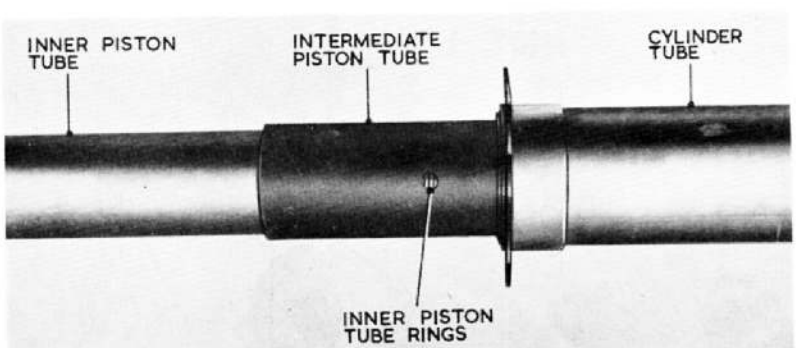

Fig. 13. Examining inner piston tube rings

Servicing the canopy jettison and time-delay unit

To examine the firing mechanism

17. The firing mechanism is examined and serviced in exactly the same manner as that for the ejection gun and described in para. 10, sub-para. (1) to (5).

To test and re-set the time-delay mechanism

18. (1) Pull forward the pawl and check the mechanism for correct functioning. Check the timing by stop watch; it should be 1 sec. $\pm$ 0·25 sec.

(2) Insert the universal joint of the special cocking tool in the socket at the end of the shaft (*fig.* 15) and turn in a clockwise direction until the gear train stops and the rack plunger is locked down with the pawl roller over centre.

Servicing the seat structure

To remove the seat pan

19. (1) Pull out the withdrawal knobs and hinge the parachute container upwards out of the way.

(2) Remove the manual harness release control cables from

the bracket on the side member by unscrewing the two 2 B.A. bolts and detach the cross-shaft lever from the cross-shaft by undoing the nut and bolt. To facilitate removal, undo the special nut at the pivoting point of the radius arm and ease the radius arm out sufficiently to withdraw the cross-shaft lever.

(3) Disconnect the starboard safety harness thigh strap from the pan.

(4) Disconnect the oxygen and anti-G suit supply pipes from the clips on the side of the seat pan.

(5) Adjust the seat to its top position whilst sitting in the seat to counteract the load of the seat balance springs.

(6) Remove the locking wire from the two spring-loaded plungers and, while pressing the pan back against the seat to relieve the plungers of the balance spring load, slide outwards the spring-loaded plungers. Allow the pan to hinge forward under the force of the balance springs until the springs are relaxed; they may then be removed.

(7) Remove the bolts from the ends of the seat raising levers and remove the seat pan.

To remove and dismantle the parachute container radius arms

20. (1) Withdraw the split pin and remove the special nut at the starboard upper corner of the parachute container, and withdraw the transverse tube to port from the container.

(2) Remove the clamping bolt and the nut, and withdraw sideways the radius arm body and the lever simultaneously.

(3) Remove the split pin and spring retaining block and withdraw the plunger.

(4) Remove the retaining screw and withdraw the sliding member from the radius arm body.

To examine and assemble the parachute container radius arms

21. (1) Check that all components are free from corrosion and that all moving parts operate freely without excessive slackness.

(2) Check that the radius arms are straight in both planes and that there are no signs of burring on the notch faces; remove any burrs with a slip stone.

(3) Lightly smear all moving parts with grease XG–275.

(4) Insert the radius arm into the radius arm body and tighten the retaining screw.

(5) Insert the plunger and spring retaining block and split pin.

(6) Assemble the radius arm body and lever, insert the clamping bolt and tighten the nut.

(7) Insert the transverse tube, tighten the special nut and lock with a split pin.

To dismantle the seat raising mechanism

22. (1) Remove the 2 B.A. lock-nut and tap out the taper pin from the port end of the countershaft. Remove the roller from the counter shaft fitting. Do not remove the $\frac{1}{4}$ in. bolts from the faces of the seat raising lever bosses.

(2) Remove the two quadrants by removing the four lock-nuts on each quadrant, and depressing the trigger control on the seat raising handle to free the plungers as the quadrant is withdrawn; the four bolts remain in place.

(3) Remove the seat raising handle by withdrawing the pin and tapping out the seat raising handle hinge pin.

(4) Push up the two plungers simultaneously and pull out the sear bar from the starboard side.

(5) Remove both plungers and springs and withdraw the countershaft to starboard out of the port seat raising lever and countershaft bearings. Remove the spring retainer, spring and plunger from the end of the countershaft and, if necessary, the starboard seat raising lever.

To examine the seat raising mechanism

23. (1) Check that all components are free from corrosion and that all rollers rotate freely without excessive slackness on their pins.

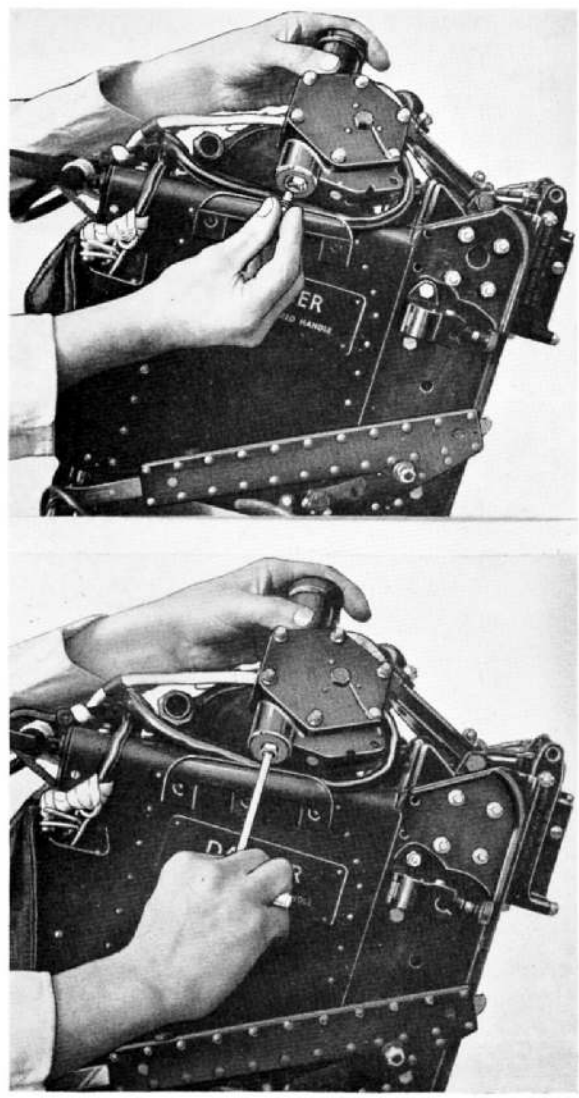

Fig. 14. Re-setting drogue gun time-delay mechanism

(A.L.26, July 55)

(2) Check that the sear bar is straight in both planes and free from wear on the ramp faces.

(3) Check that the locking plungers and springs move freely in their housings in the seat raising levers.

To assemble the seat raising mechanism

Note . . .

Lubricate all parts during assembly with Grease XG–275.

24. (1) Pass the shaft with the starboard seat raising lever attached through the bearings in the side beams, and pass the port raising lever with the countershaft end fitting attached on to the shaft. Assemble the roller and split pin.

(2) Insert the locking plungers and springs into the raising levers and, whilst depressing each plunger in turn, insert the sear bar into the countershaft, passing it through the slots in the locking plungers.

(3) Replace the plunger, spring and spring retainer into the end of the countershaft, and insert the taper pin and lock-nut.

(4) Replace the quadrants and the seat raising handle.

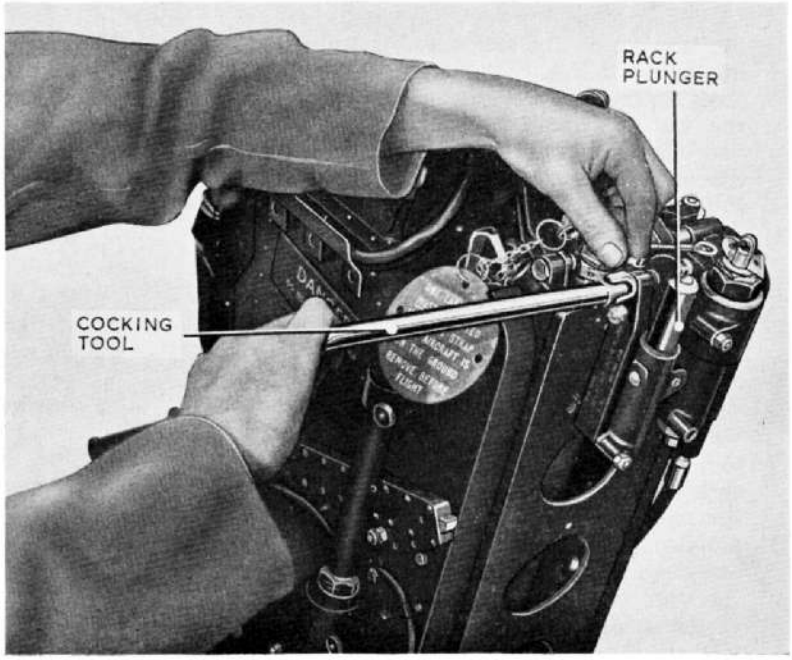

Fig. 15. Re-setting the canopy jettison and time-delay unit

To fit the seat pan

25. (1) Place the pan on the seat raising levers, which must be in the top position, and insert and secure the bolts.

(2) Insert the seat balance springs and press the pan back against the seat, so compressing the springs. Operate the spring-loaded plungers to engage with the guides in the side beams and lock with non-corrodible steel locking wire.

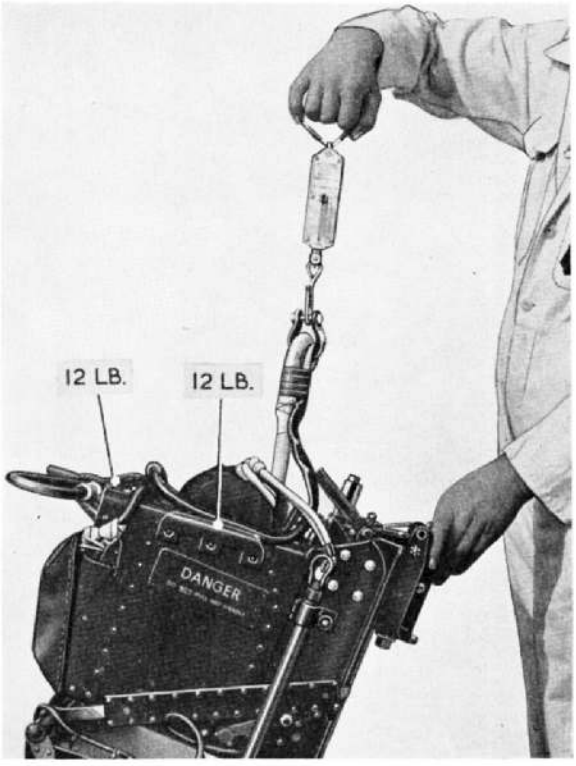

Fig. 16. Testing the lifting lines

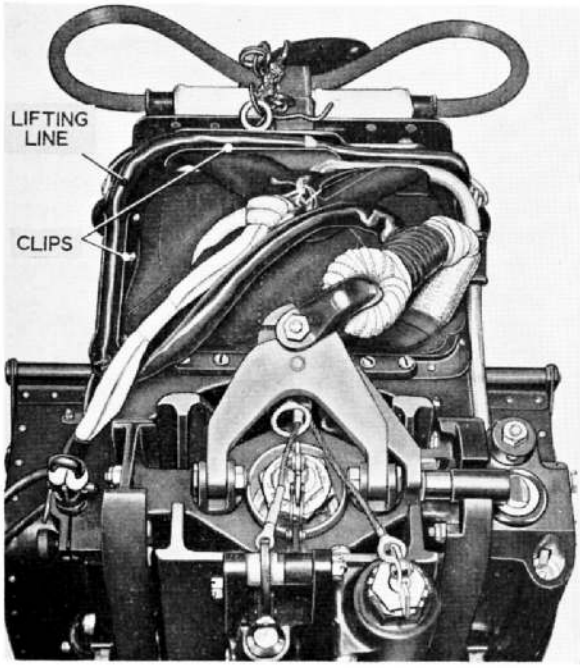

Fig. 17. Fitting the lifting lines

Ensure that the spring-loaded plungers have engaged correctly.

(3) Connect the parachute container to the lower brackets by operating the release knobs.

(4) Connect the starboard safety harness thigh strap.

(5) Connect the oxygen and anti-G suit supply pipes.

Testing the lifting lines

26. (1) Disconnect the drogue withdrawal line from the drogue shackle, and disconnect the drogue shackle from the scissor shackle.

(2) Connect a spring balance to the drogue shackle and pull upwards. The lifting lines should not pull out of the first clip until the scale registers 12 lb. as indicated in fig. 16. A tolerance of $\pm$ 2 lb. is permissible, and any necessary adjustments may be made by gently opening out or closing in the clips as appropriate.

Fitting the lifting lines

27. Commencing at the front of the drogue container, press the lifting lines down into their clips, using thumb pressure, until the final result is similar to that shown in fig. 17.

Servicing the barostatic time-release unit

28. (1) Remove the unit from the starboard seat beam by undoing the four $\frac{1}{4}$ in. B.S.F. nuts and disconnecting the release cable.

(2) Pass the complete unit to the Instrument Section for servicing, full instructions for servicing are given in A.P.1275A, Vol. 4.

(3) Service the safety harness and quick-release fitting in accordance with the instructions given in A.P.1182B, Vol. 4.

To fit and re-set the time-release unit

29. (1) Assemble the unit to the starboard seat beam by fitting and tightening the four $\frac{1}{4}$ in. B.S.F. nuts.

(2) Assemble the safety harness release cable conduit and starboard thigh strap.

(3) Turn the operating plunger until the word TOP is at the bottom, insert the sear from the top, depress the plunger until it engages and then rotate it a half-turn.

(4) Close the scissor shackle over the drogue shackle, and slide the locking plunger to the left until it rests against the scissor shackle.

(5) Place the rack plunger tool over the primary plunger (*fig.* 18) and press down until it engages.

(6) Place the harness release plunger tool over the plunger, ensuring that the cut-away portion of the tool is facing forward, and press down until it engages. Whilst doing so, place the other hand on the safety harness quick-release lever and assist it round to the locked position.

Servicing the face screen and drogues

To test the face screen

30. Fit a temporary cord bridle to the firing handle and connect a spring balance to the bridle (*fig.* 19).

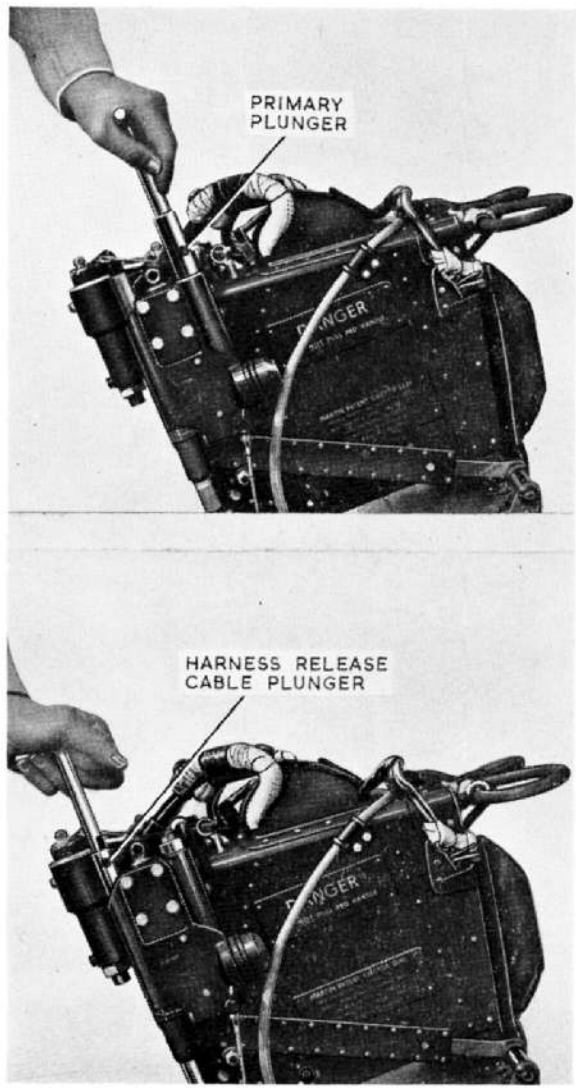

Fig. 18. Re-setting barostatic time-release mechanism

Pull until the spring-loaded plungers disengage, watching the scale whilst doing so. The face screen should not pull out of its housing until the scale registers 35 to 40 lb. Repeat the test (if necessary re-engaging the spring-loaded plungers) and check that the tongue on the safety strap does not pull out of the restraining clip on the top of the drogue container until 35 to 40 lb. is registered.

To examine the face screen

31. (1) Withdraw the face screen to its fullest extent.

(2) Examine the fabric of the face screen and check the security of the attachment of the front edge to the firing handle and the two fittings at the rear edge.

(3) Examine the attachment of the firing cable to the face screen.

To pack the face screen

32. (1) Starting with the face screen fully extended, carefully roll the screen over the lower edge of the slot in the container, pressing

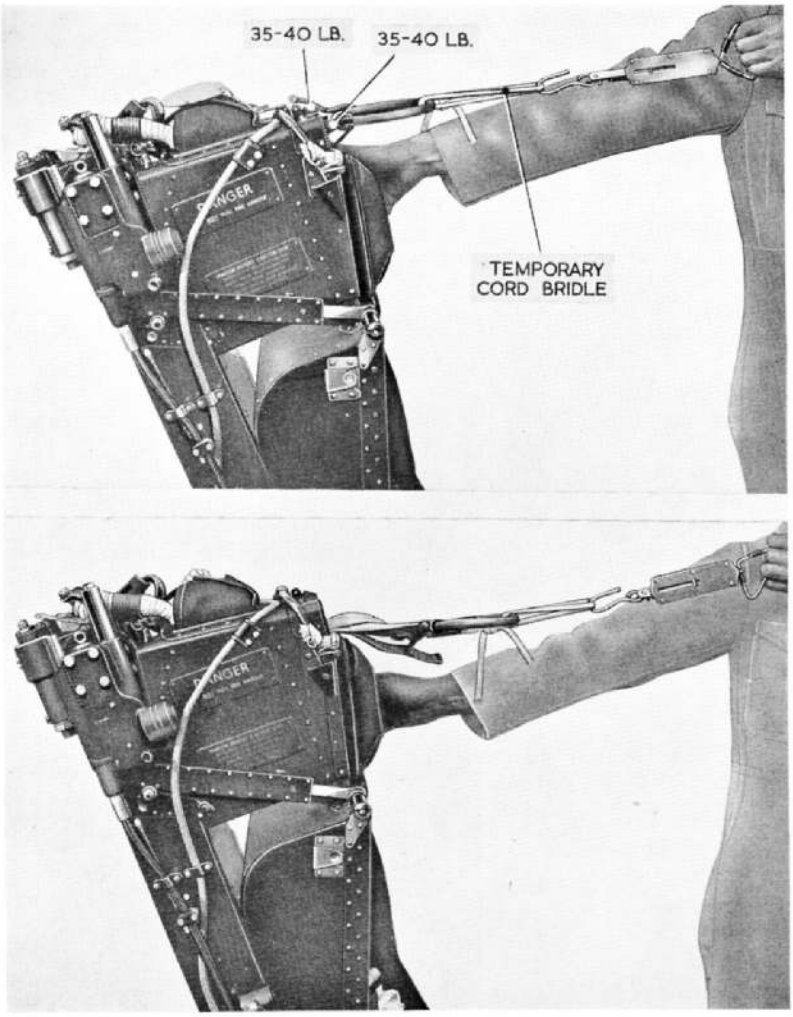

Fig. 19. Testing the face screen

down into its compartment, until the final result is as nearly as possible as shown in Chap. 3, fig. 7.

(2) Insert the firing handle into its socket, but before pressing home the locking plungers, ensure that the tongue of the strap is pushed home in the restraining clip.

To examine the drogues

33. (1) Break the thread attaching the flap securing pin to No. 4 flap and withdraw the pin.

(2) Fold back the four flaps and withdraw the drogues and shroud lines.

(3) Examine the drogues, shroud lines and nylon rope for damage or deterioration.

To pack the drogues

34. (1) Open the four flaps and the protective sleeve.

(2) Insert the sleeve-protected shroud lines from the shackle into the rearmost outer corners of the right-hand compartmnt of the drogue container and fold the shroud lines as shown in the upper diagram of fig. 20.

(3) Extend the remaining shroud lines and check that they are not entangled; fold the 5 ft. drogue into three double folds and pack into the left-hand compartment.

(4) Cover the shroud lines and the 5 ft. drogue with the protective sleeve. The 5 ft. drogue withdrawal line must emerge from the protective sleeve in the right-hand compartment.

(5) Fold the 5 ft. drogue withdrawal line and the 18 in. drogue shroud lines on top of the protective sleeve in the right-hand compartment and stow the 18 in. drogue as shown in the lower diagram of fig. 20.

(6) Close the flaps in the following order:—port (1), starboard (2), rear (3) and front (4). The wire loop must pass through each eyelet in turn and the 18 in. drogue withdrawal line must emerge from the rearmost corner nearest the drogue gun.

(7) Insert the flap securing pin attached to the 18 in. drogue withdrawal line through the wire loop and tie to the fabric loop on the front flap with a single loop of No. 8 parachute thread.

To examine the leg restraining device

35. (1) Check that the nylon cords can be drawn *downwards* freely through the snubbing units, but that the units restrain any *upward* movement.

(2) Grasp each cord in turn and pull upwards; whilst doing so, depress the release button beneath the snubbing unit. Check that when the button is depressed, the cord can be pulled freely in either direction and, when the button is released, that the cord is restrained from upward movement once again.

(3) Examine the nylon cords for damage and deterioration; in particular check the upper loops for fraying.

(4) Examine the aircraft floor brackets for damage and security.

Fitting the auxiliary cartridges

36. (1) Insert each auxiliary cartridge into its housing and replace each cartridge cover; tighten all four covers with the special spanner.

(2) Lock each cover with a length of 20 S.W.G. non-corrodible steel locking wire and seal, using a lead seal and the special pliers.

Fitting the ejection gun in the guide rail

37. Carefully insert the ejection gun into the guide rail, taking care not to damage the cylinder tube by allowing it to strike the walls of the guide rail. Pull out the bottom latch and

press the gun home.

Note . . .

The ejection gun is to be examined for correct locking of the piston tubes to the cylinder tube immediately prior to, and after, assembly in the guide rail. In addition, a physical check is to be made to ensure that the ejection gun itself is securely anchored in the guide rail.

Installing the seat in the aircraft

38. (1) Carefully place the seat over the guide rail, register the rollers in the guides and lower the seat until the top latch engages.

(2) Insert the safety pin (*fig.* 5)

(3) Connect the time-release unit static line by inserting the quick-release pin.

(4) Connect the leg restraining cords by inserting the two quick-release pins in the brackets on the cockpit floor.

(5) Connect the intercomm. lead and main and emergency oxygen connections.

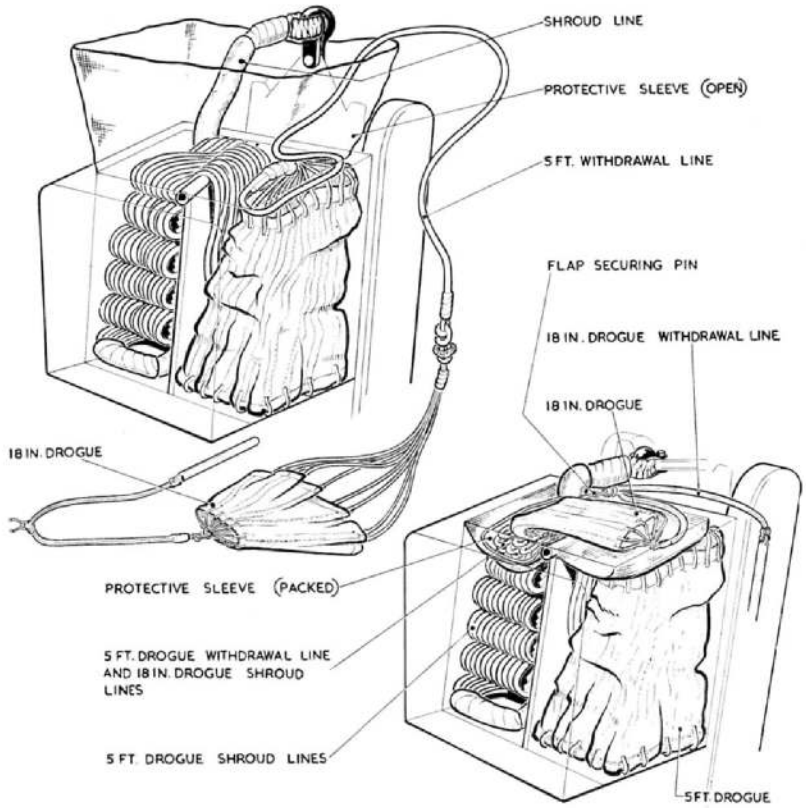

Fig. 20. Stowing the drogues

Fitting the drogue gun

39. (1) Ensure that the safety lock pin is still in position, then fit the drogue gun in the quick-release clamps.

(2) Connect the static rod and drogue withdrawal line by inserting the quick-release pins.

(3) Withdraw the safety lock pin.

Fitting the canopy jettison and primary cartridges

40. (1) Ensure that the time-delay mechanism is properly cocked and that the small safety pin is in position in the red painted lugs. Insert a safety pin in the alternative firing handle on the seat pan.

(2) Insert the canopy jettison cartridge. Fit the firing body and tighten with the special spanner. Insert one of the large safety pins in the sear, lock with 20 S.W.G. non-corrodible steel wire and seal with a lead seal using the special pliers.

(3) Insert the primary cartridge spring into the breech, insert the primary cartridge and press it into the breech with the firing body until the thread engages.

(4) Screw in the firing body as far as possible by hand and tighten with the special spanner. Lock with wire and seal as before. Insert the second large safety pin in the sear.

Note . . .

Before sealing, cut the ends of the locking wire short and make ceratin that the loose ends of wire have been removed, otherwise they may subsequently prevent the seat structure

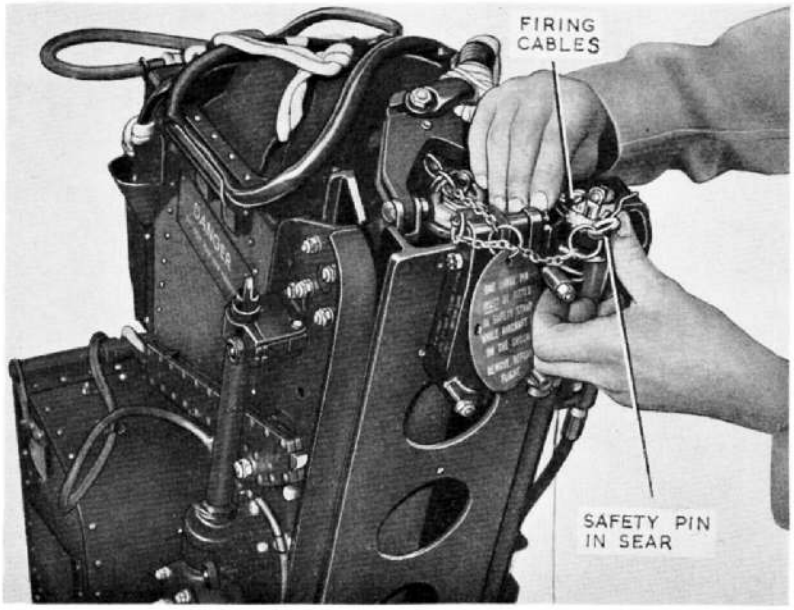

Fig. 21. Connecting firing cable

being dropped right home and the latch engaging

(5) Check that the small safety pin is still in position in the lugs, then push forward the ejection gun sear and engage the articulated link.

(6) Push forward the canopy jettison gun sear (*fig.* 21) and engage the two firing cables, i.e., the large eye end on the cable from the face screen and the cable from the manual jettison cable.

Note . . .

When aircraft servicing is completed, remove all three safety pins and insert one of the larger safety pins in the face screen lock. Do NOT remove the safety pin from the alternative firing handle on the seat pan.

P24939 548054/3761 10/55 1000 C & P **Gp. 1**
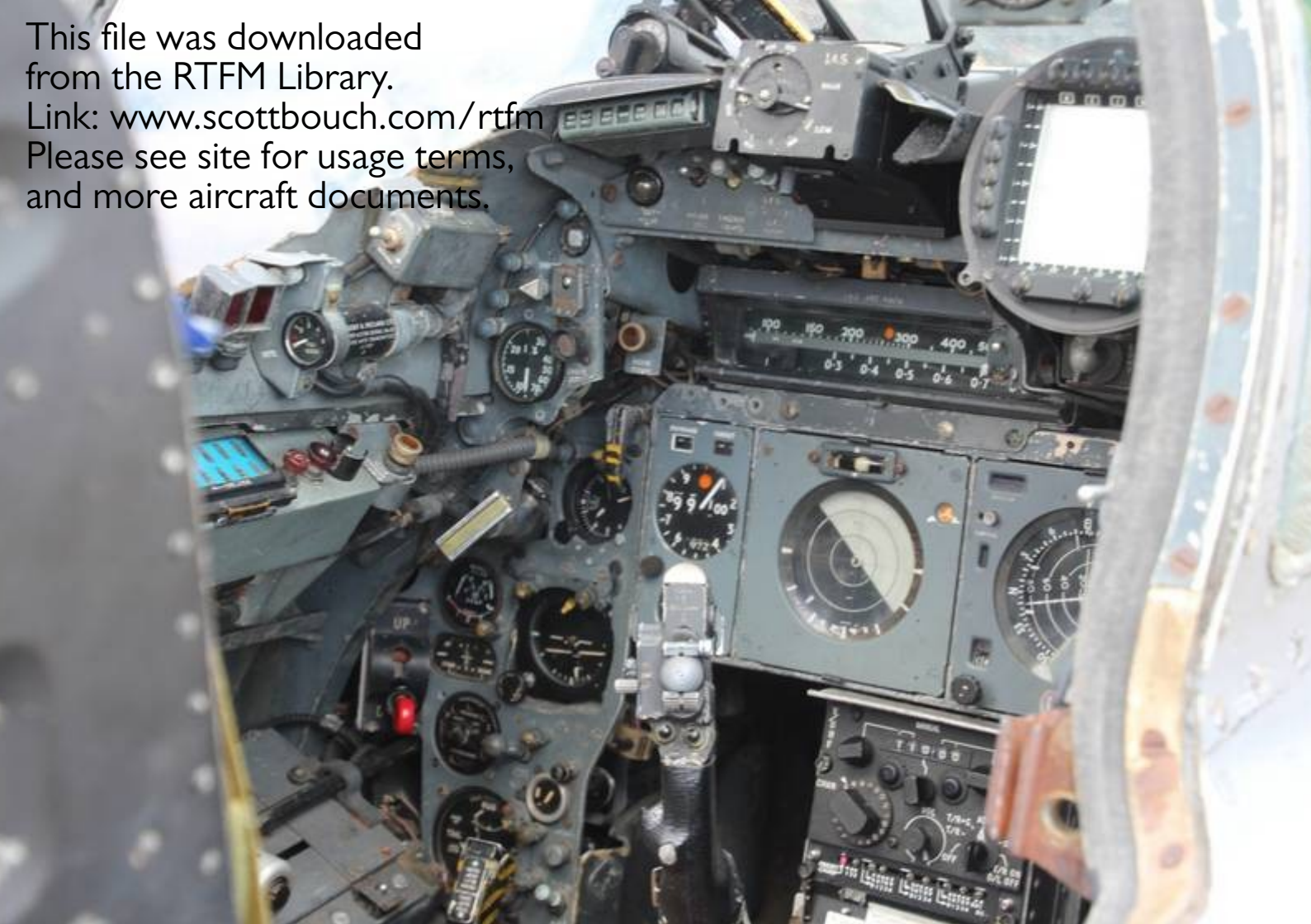
This file was downloaded
from the RTFM Library.
Link: www.scottbouch.com/rtfm
Please see site for usage terms,
and more aircraft documents.