B.R.1771(4)

COMMON NAVAL RADIO TEST EQUIPMENT

Handbook for

A.P. 68622

OSCILLOSCOPE, MINIATURE, CT.52.

(JOINT-SERVICES DESIGNATION: OSCILLOSCOPE, MINIATURE, C.T.52)

ANY SUGGESTIONS FOR AMENDMENTS OR ADDITIONS TO THIS BOOK SHOULD BE SUBMITTED THROUGH THE USUAL CHANNELS.

★

RADIO EQUIPMENT DEPARTMENT . ADMIRALTY
DECEMBER, 1952 . (R.E.1385/52)

A.P.68622 OSCILLOSCOPE, MINIATURE, CT52

(Joint Services Designation:- Oscilloscope, Miniature, CT52)

SUMMARY OF DATA

PURPOSE

A general-purpose single-beam Oscilloscope and Monitor for investigating waveforms in the frequency range 10 c/s to 1 Mc/s, and pulse waveforms of duration from 50 milliseconds to 0.1 microsecond.

DESCRIPTION

The instrument comprises a 2½" single-beam electrostatically focused and deflected C.R.T. designed for symmetrical operation, a Miller transitron circuit and amplifier to produce the necessary sweep voltages, an inverter valve to permit positive or negative synchronising voltages, a simple 5 : 1 resistance attenuator, a negative-feedback amplifier with L.F. and H.F. compensation to give the required band-width and gain, and a 0.5 microsecond delay line for displaying the leading edge of short pulses. Interchangeable power units permit operation from A.C. mains or from a 22 to 30 volts D.C. supply; for D.C. operation a mains unit incorporating a vibrator is used.

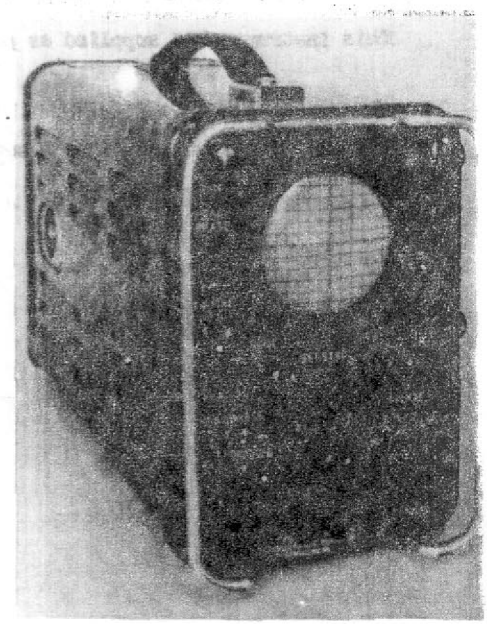

A.P.68622 OSCILLOSCOPE, MINIATURE, CT

PERFORMANCE

(a) **Timebase**

(i) Free-running:- Sweep-frequency variable between 10 c/s and 40 kc/s.

(ii) Single-sweep:- Sweep-time variable between 80 milliseconds and 3 microseconds triggered from positive or negative leading-edges of pulses of approximately 30 volts peak amplitude and p.r.f. between 50 and 3,000 per second.

(b) **Y-plate**

(i) Attenuator:- Divides by 5. Capacitance-compensated, giving a flat response over the frequency-range 50 c/s - 100 kc/s.

(ii) Amplifier:- A single-stage amplifier which may be switched to give either a gain variable up to 38dB (80 times) flat to within 3dB from 25 c/s to 150 kc/s with maximum input of 15 volts r.m.s. or variable up to 28dB (25 times) flat to within 3dB from 25 c/s to 1 Mc/s with maximum input 25 volts r.m.s.

(iii) Delay Line:- A terminated delay line to give a signal delay of approximately 0.5 microsecond; input impedance 75 ohms.

(iv) Calibration:- 100 volt peak-to-peak calibration voltage available on the front panel, with facilities to vary the phase in relation to the supply voltage by 60°.

Facilities on the front panel for measuring Y-shift voltage.

(c) **Y-plate sensitivity**: 40 volts per cm.

POWER REQUIREMENTS AND CONSUMPTION

Selector permits choice of 115, 180, 230 volts, 50 to 500 c/s A.C. Later models have tappings 115, 180, 200, 210, 230, 240, 250 volts, 50 to 500 c/s A.C.

Consumption: 50 watts approximately.

The instrument may also be operated from 22 to 30 volts D.C. using A.P. 68623 Power Unit CTA1 (interchangeable with A.C. Power Unit) and supplied in separate storage box; this unit incorporates a vibrator.

PHYSICAL DATA

Weight 14 lb approximately
Height 8-5/16"
Depth 13 in.
Width 5½ in.

REMARKS

This instrument is supplied as part of Testing Outfits TKA-TKH.

OTHER SERVICE AND COMMERCIAL [illegible]

Joint-Services Designation: Oscilloscope, Miniature, CT52.

AIR MINISTRY NAME FOR CT52 [illegible] CT 81A AIR MINISTRY [illegible] 10K/16993 FOR AC POWER UNIT

HANDBOOK

B.R. 1771(4)

ESTABLISHMENT LIST

E.1015

PRODUCTION SPECIFICATION

13379

HANDBOOK

FOR

A.P.68622 OSCILLOSCOPE, MINIATURE, CT.52

(Joint-Services Designation: Oscilloscope, Miniature, CT.52)

CONTENTS

SUMMARY OF DATA

PART 1

		Page
CHAPTER 1.	TECHNICAL DESCRIPTION	
	General Description	1
	Panel Terminals and Controls	1
CHAPTER 2.	DETAILED TECHNICAL DESCRIPTION	
	Power Units	5
	A.C. Power Unit	5
	D.C. Power Unit	6
	L.C. Voltage Supplies	7
	Cathode-ray Tube	8
	Attenuator, Amplifier and Delay Line	9
	Timebase-generator	13
	Sync Inverter	14
	Single-sweep Operation	15
	Free-running Operation	16
	Timebase Floating-paraphase Amplifier	18

PART 2

CHAPTER 1.	OPERATING INSTRUCTIONS	
	Inspection of Instrument	19
	Connections	19
	C.R.T. Controls	20
	Timebase-generator Controls	21
	Y-plate Controls	22
	Calibration	23
CHAPTER 2.	MAINTENANCE, TESTING AND FAULT-FINDING	
	Mechanical Features	25
	Connecting Sockets	25
	Removal of Components, Valves etc.	25
	Preliminary Checks	28
	Testing Procedure	28
	Case A: No spot or trace	28
	Case B: When a spot can be obtained	29
	Case C: Timebase is too short	30
	Case D. Trace unstable on single-sweep	31
	Testing Amplifier V6	34
	Testing Delay Line	34A
	SETTING UP PROCEDURE OF TIMEBASE AFTER CHANGING MILLER VALVE	34
APPENDIX NO. 1	LIST OF COMPONENTS	35-39

LIST OF ILLUSTRATIONS

Diagram 1.1	View of Front Panel	- facing page 1
Diagram 1.2	Single Sweep T.B. Generator -	page 15
Diagram 1.3	Free Running T.B. Generator -	page 17
Figure 1	Sync Input, Time Base-Generator and Paraphase Amp. Circuits.	
Figure 2	Y-Plate Amplifier, Attenuator and Delay Line and C.R.T. - circuit	
Figure 3	Power Units and Rectifiers - circuit	
Figure 4	Complete Circuit	
Figure 5	Waveforms of Oscilloscope CT.52 (Single-Sweep)	
Figure 6	Waveforms of Oscilloscope CT.52 (Free-Running)	
Figure 7	Component Layout - Left Side View	
Figure 8	Component Layout - Right Side View	
Figure 9	Component Layout - Top View - Panel Lowered	

P A R T 1

CHAPTER 1

GENERAL DESCRIPTION & CONTROLS

CHAPTER 2

DETAILED TECHNICAL DESCRIPTION

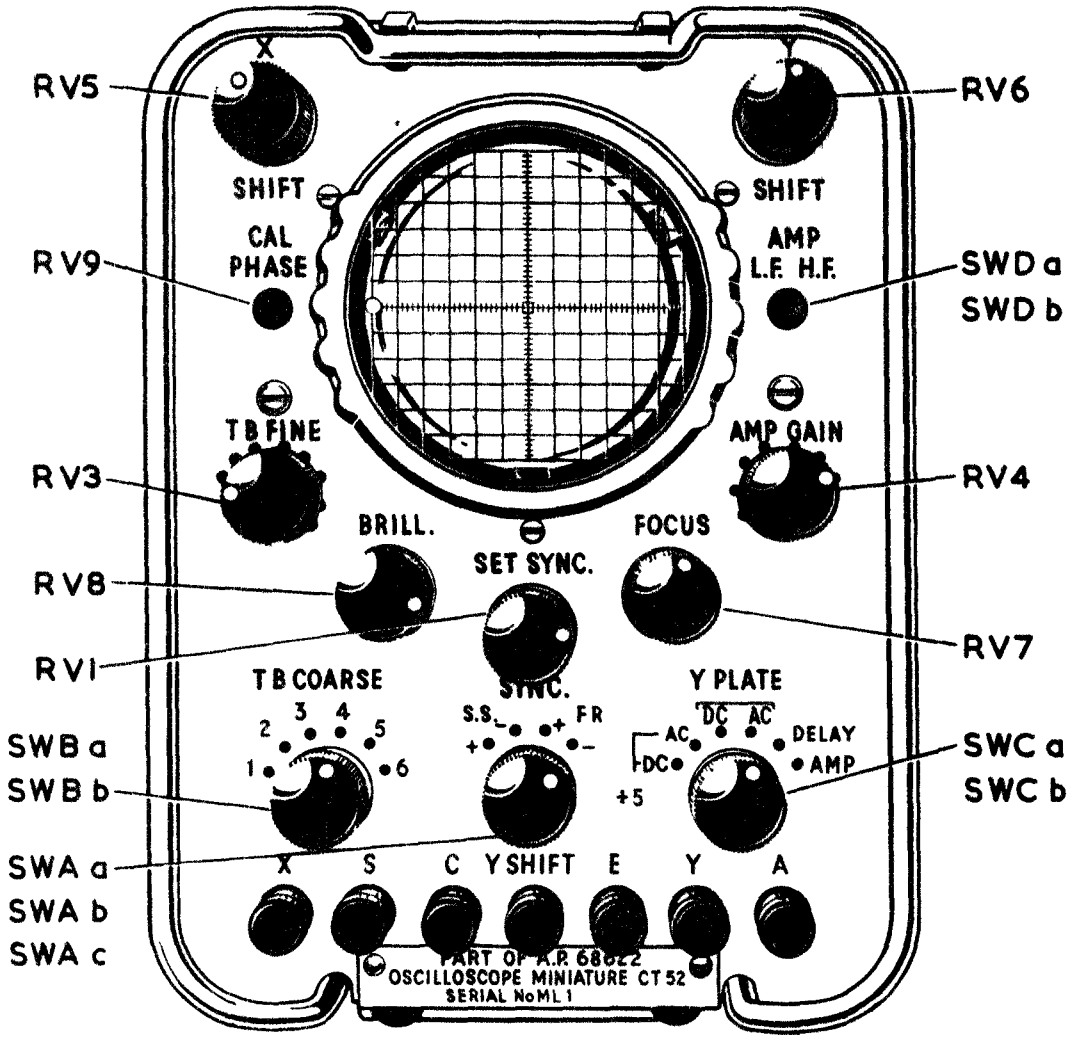

DIAG. 1.1 FRONT PANEL

CHAPTER 1

TECHNICAL DESCRIPTION

GENERAL DESCRIPTION AND CONTROLS

1. The Miniature Oscilloscope CT52 is of comparatively simple type and, weighing 14 lb, is readily portable. It is fully tropicalised. The C.R.T. screen has a diameter of $2\frac{3}{4}$ in. Two modes of operation are available - single-sweep working and free-running. In the first mode, each timebase sweep is initiated by an input trigger pulse; in the free-running mode, the sweeps follow automatically in succession with means for synchronisation. The sweep-duration in both cases may be varied (between 80 milliseconds and 3 microseconds in single-sweep operation and between 60 milliseconds and 10 microseconds in the free-running mode). The sync pulse may be positive or negative. The input signal to be observed on the C.R.T. may be D.C. or A.C. in character and may be applied without attenuation or may be reduced to 1/5th by means of an attenuator. The A.C. signal may be amplified, if desired, the gain being continuously adjustable.

2. The oscilloscope may be used horizontally, vertically or inclined. The front guard-rail is a protection for the front panel and, when pulled out, serves as a stand for tilting the oscilloscope. The mechanical features of the instrument are described in more detail in Part 2 of this book.

PANEL TERMINALS AND CONTROLS

The following front panel terminals and controls (see Diag. 1.1) are provided for the purposes indicated:

3. TERMINALS

Seven terminals in line along the bottom of the panel.

X : For (a) injecting timebase voltages or (b) extracting the timebase sawtooth voltage. This terminal is internally connected to the X1 plate.

S : Sync input terminal.

C : (a) Provides an A.C. Voltage for calibrating the screen. This terminal is connected internally through a phase-adjuster circuit (or a resistor) to a secondary winding on the power-unit transformer.

Y SHIFT: For measuring Y-SHIFT voltage by means of an external high-resistance voltmeter. This terminal is internally connected to Y2 plate.

E : For connection to earth.

Y : Input terminal for signal to be observed; used when signal is to be applied direct or through a capacitor to Y1 plate, or when the attenuator or amplifier is to be used.

A : Output terminal from amplifier; used when amplification is required for synchronising as well as viewing.

4. PRESET ADJUSTMENTS

These are made with a screwdriver through holes in the panel.

CAL. PHASE (RV9): When using an A.C. voltage from terminal C for SYNC purposes, the phase may be varied 60° each way. Not used when the oscilloscope is operated off D.C. or from a 50 c/s supply.

AMP. L.F. H.F. (SWDa and SWDb): Selects gain/bandwidth characteristic of Y-plate amplifier.

5. SWITCHES

SYNC. switch (SWAa, SWAb and SWAc) Four positions are available.

S.S.+ for single-sweep working, the SYNC pulse being positive.
S.S.- for single-sweep working, the SYNC pulse being negative.
F.R.+ for free-running, the SYNC pulse being positive.
F.R.- for free-running, the SYNC pulse being negative.

6. T.B. COARSE switch (SWBa and SWBb) Six positions are available.

(1) to (5) provide selection of one of five Miller capacitors. As the switch-knob is turned clockwise, the Miller capacitance is decreased and the timebase velocity is increased. This increases the velocity in steps and the T.B. FINE potentiometer is used to cover intermediate velocities.

(6) for switching off timebase when sync switch is set to F.R.+ or F.R.- and for selecting an extra-fast sweep with sync switch set to S.S.+ or S.S.-.

7. Y PLATE Switch (SWCa and SWCb) governs treatment of signal before application to Y1 plate of C.R.T. Six positions are available:

÷ 5 D.C. Attenuator reduces D.C. signal to one-fifth of input amplitude.

÷ 5 A.C. Attenuator reduces A.C. signal to one-fifth of input amplitude.

D.C. Input is applied directly (without attenuation) to Y1 plate. Suitable for D.C. and some A.C. signals.

A.C. Input is applied through a capacitor (without attenuation) to Y1 plate. Suitable for A.C. signals.

DELAY. Used when the signal comes from a low-impedance source and requires to be delayed until after the start of the timebase. This permits a very steep leading-edge of a pulse to be observed.

AMP. Used when an A.C. input signal requires amplification Bandwidth is selected by preset control AMP. LF HF referred to above.

8. POTENTIOMETER CONTROLS

X SHIFT (RV5)	Clockwise rotation moves trace to the right.
Y SHIFT (RV6)	Clockwise rotation moves trace upwards.
T.B. FINE (RV3)	Adjusts a voltage which gives a continuous adjustment of the T.B. velocity; it is used in conjunction with the T.B. COARSE switch. Clockwise rotation increases the velocity.
AMP GAIN (RV4)	Controls the amplification of an A.C. input signal applied to terminal Y. Clockwise rotation increases gain.
BRILL (RV8)	Controls brilliance of spot or trace.
SET SYNC (RV1)	Controls the amplitude of the SYNC voltage. Clockwise rotation increases the amplitude.
FOCUS (RV7)	Alters voltage of focusing electrode of C.R.T.

9. VALVES

V1 (screened pentode) CV.138	V5 (screened pentode) CV.138
V2 (double diode) CV.140	V6 (screened pentode) CV.138
V3 (screened pentode CV.329 with suppressor diode)	V7 (diode) CV.1092
V4 (screened pentode) CV.138	V8 (C.R.T.) CV.2175

NB. The CV.329 will later be replaced by CV.2209 which, however, has similar characteristics and identical valve base and pin numbers.

CHAPTER 2

DETAILED TECHNICAL DESCRIPTION

1. The technical description that follows is sub-divided as follows:-

   (a) POWER UNITS (A.C. and D.C.) and D.C. Supplies.

   (b) CATHODE RAY TUBE.

   (c) ATTENUATOR, AMPLIFIER and DELAY LINE.

   (d) SYNC INVERTER and AMPLITUDE CONTROL.

   (e) TIMEBASE-GENERATOR (a) SINGLE-SWEEP (b) FREE-RUNNING.

   (f) TIMEBASE FLOATING-PARAPHASE AMPLIFIER.

The sub-divided circuit is given in Figs. 1, 2, 3, and the complete circuit in Fig. 4. The explanations of different parts of the circuit are illustrated by the somewhat-simplified circuits of Diags. 1.2 and 1.3.

2. POWER UNITS

The oscilloscope is issued with alternative power units:

   (a) A.C. power unit for operation from A.C. mains.

   (b) D.C. power unit (A.P. 68623 Rectifier Unit 63AL) for operation from a 24V D.C. supply (e.g. a battery).

Either (but not both) may be incorporated in the complete oscilloscope. Interchangeability is facilitated by providing each power unit with eight sockets which engage with eight plug contacts in the main oscilloscope circuit (two plug and two socket contacts are unused). The unused power unit is kept in a separate stowage box.

3. As Fig. 3 shows, each power unit consists essentially of a "mains transformer" with various windings and tappings. The principal difference between D.C. and A.C. power units is that the transformer primary winding of the D.C. model is fed with non-sinusoidal A.C. derived from a vibrator (incorporated in the D.C. power unit) operating from a 24V D.C. supply. Whichever power unit is used, the outputs (of various voltages) are A.C. The rectifier circuits necessary to produce the high-voltage D.C. supplies are incorporated in the main oscilloscope circuit and not in the interchangeable power units.

4. A.C. POWER UNIT ([illegible])

The A.C. Power Unit has a tapped primary winding on TR1 enabling the oscilloscope to be operated from any one of the following A.C. supplies:

(a)	200 - 250V	50 - 500 c/s
(b)	160 - 195V	
(c)	100 - 125V	

5. A voltage-selector is fitted into the appropriate socket. Oscilloscopes with serial numbers 1 to 400 have the voltage-selector sockets marked with the nominal values 115V, 180V and 230V. Later versions are marked 115,180,200,210, 220,230,240,250V. The fuse is shown as FS3 (2.5A) SWE being the on-off mains switch and PLB the mains plug. The power consumption is approx. 50W. A fuse FS1 (150 mA) is in series with the 370V secondary winding.

6. The socket numbers enumerated below (shown in Fig.3) provide the A.C. voltages (r.m.s.) mentioned; the purpose of each A.C. supply is stated. (Socket SKA 10 is connected to earth when the unit is plugged in. The earth symbols in Fig. 3 are for explanatory purposes).

SKA 4 and 10: Provide 6.3V A.C. to heaters of the valves V1 to V6. One side of each heater is permanently earthed, the other side x being connected to the plug PLA4 that engages with socket SKA 4.

SKA 11 and 10: Provide 35V A.C. to the phase-adjuster RV9, C46 (see next item).

SKA 12 and 10: Provide 35V A.C. to the phase-adjuster. The sockets SKA 11 and 12 with the earthed socket 10 (which is virtually a middle tapping) provide at the calibration terminal C an A.C. supply at 35V r.m.s. (peak 50V). This voltage, if applied to the Y1 plate, gives a peak-to-peak voltage of 100V. The output at C may be used for two purposes:

(a) Calibrating the C.R.T. screen.

(b) Providing an A.C. voltage for SYNC purposes. It is of special value for triggering the timebase when the oscilloscope is running from a 500 c/s supply. The phase-adjuster is then used to phase the triggering point on the cycle. A phase-shift up to 60° either way is obtainable.

SKA 8 and 10: Provide 370V A.C. through FS1 to a half-wave rectifier circuit (based on MR3); the rectifier provides an H.T. voltage of +250V for all the valves and for the X- and Y-shift networks.

SKA 6 and 10: Provide 420V A.C. to a voltage-doubler rectifier circuit (based on MR1 and MR2); this rectifier provides -800V D.C. to the timebase circuit and also -800V for the resistor chain that supplies various D.C. voltages for the C.R.T.

SKA 7 and 5: Provide 6.3V A.C. to the heaters of V7 and the C.R.T. (V8); neither side is earthed, as one side of the heater is connected to the C.R.T. cathode which is at a high negative voltage to earth.

The resistor R47 (2.7 kilohms) is inserted in the lead to terminal C as a safety precaution in case of an external short-circuit; it limits the maximum current that could be taken from terminal 'C'.

D.C. POWER UNIT

7. The D.C. Power Unit incorporates a "mains transformer" TR2 whose primary is fed with non-sinusoidal A.C. provided by a non-synchronous vibrator included in the power unit and operating off a 24V D.C. supply (e.g. a battery). Either side of the 24V supply may be earthed, if desired. The primary circuit is conventional, with plug PLC, an on-off switch SWF and parallel resistors R50 R51 (5.6 ohms each).

The secondary windings correspond to those of the A.C. power unit, except that, as phase-shifting is not used (as there is no A.C. input supply), a centre-tapped secondary for that purpose is not required. Instead a 50V A.C. supply is taken from socket SKB 12 to provide a calibrating voltage to terminal C.

8. The socket numbers enumerated below (shown in the Fig. 3) provide the r.m.s. voltages mentioned; the purpose of each A.C. supply is stated. (With the power unit in circuit, socket SKB 10 is connected through its associated plug to earth).

SKB 4 and 10: Provide 6.3V A.C. to heaters of the valves V1 to V6. One side of each heater is permanently earthed, the other side x being connected to the plug PLA4 that engages with socket SKB 4.

SKB 11 is commoned with SKB 10 and is therefore earthed.

SKB 12 and 11: Provide 50V A.C. to the phase-adjuster (not used) and thence to calibration terminal C.

SKB 8 and 10: Provide 450V A.C. to the half-wave rectifier circuit based on MR3; the rectifier provides the H.T. of +250V for all the valves and for the X- and Y- shift networks.

SKB 6 and 10: Provide 510V A.C. to the voltage-doubler rectifier circuit (based on MR1 and MR2); this rectifier provides -800V D.C. to the timebase circuit and also -800V for the resistor chain that supplied various D.C. voltages for the C.R.T.

SKB 7 and 5: Provide 6.3V A.C. to the cathode heaters of the C.R.T. and V7; neither side is earthed, as one side of the C.R.T. heater is connected to the C.R.T. cathode which is at a high negative voltage to earth.

NOTE:- The voltages provided for the rectifiers are higher than for the A.C. unit because the waveform is nearly square.

D.C. VOLTAGE SUPPLIES

9. There are two main D.C. supplies, each provided by a metal-rectifier system:

(a) +250V (with respect to chassis) at 35 to 40 mA, for valve anode and screengrid supplies. This voltage is also used in the X- and Y-shift potentiometer networks in conjunction with the negative voltage from a tapping on the -800V resistor chain (R42, R43, RV7, R44, RV8); X2- and Y2-shift voltages may thus be made positive or negative with respect to earth.

The +250V is derived from the rectifier circuit based on the half-wave metal rectifier MR3; C44 is the reservoir capacitor and the D.C. is smoothed by two resistance-capacitance filters R48 C42 and R45 C40.

(b) -800V (with respect to chassis) at 2 mA. This is provided by the voltage-doubling circuit based on the metal rectifiers MR1 and MR2. A single filter R46 C41 is used for smoothing. The cathode is given approximately -700V with respect to the accelerator A2 which is near earth potential.

DETAILED TECHNICAL DESCRIPTION

CATHODE-RAY TUBE

10. The C.R.T. (V8) has a 2¾-in. screen. Green fluorescence with short afterglow is obtained. The C.R.T. contains:

(a) An indirectly-heated cathode K.

(b) Modulating electrode G to which an adjustable negative bias (relative to the cathode) is applied by the panel control BRILL. (potentiometer RV8) which adjusts the brilliance of the trace.

(c) Focusing electrode A1 whose voltage (negative with respect to earth and positive with respect to cathode) is adjusted by RV7 for focusing.

(d) Accelerator A2 which is near earth potential; to maintain good focusing A2 is commoned with Y2 plate and its voltage to earth therefore varies with the Y-shift voltage.

(e) Y1 and Y2 plates. The input signal is fed to only one plate, Y1; the plate Y2 is used solely for the Y-shift. Sensitivity is approx. 40V/cm.

(f) X1 and X2 plates. The timebase sweep-voltage is applied symmetrically to X2 and X1; the X-shift voltage is applied only to X2. Sensitivity is approx. 60V/cm.

11. The vertical shifting of the trace is effected by the Y-shift potentiometer RV6. A protective resistor R40 (220 kilohms) is inserted in the Y2 lead to limit current from the Y-shift potentiometer should a short-circuit occur at Y2 or, as is more likely, at the terminal Y SHIFT. A connection is taken from Y2 to the terminal Y SHIFT (one of the seven terminals at the foot of the front panel). This terminal is provided so that the Y-shift voltage with respect to earth may be measured by an external voltmeter (which should have a high resistance or be a valve voltmeter).

12. The horizontal shifting of the trace is effected by the X-SHIFT potentiometer RV5 which, like the Y-SHIFT potentiometer, is across +250V and -275V. The X-shift voltage is applied to only one X plate (namely X2) through R38 (4.7 megohms). This resistor prevents the X-shift network from "short-circuiting" the sweep voltage from the timebase-generator circuit. The corresponding resistor R41 (4.7 megohms) ties the X1 plate to earth potential without short circuiting the sweep voltage applied to X1 from the timebase-generator circuit. A clockwise rotation of the X-SHIFT knob moves the spot or trace to the right.

13. The timebase sweep-voltage is symmetrically applied to the X2 and X1 plates; a push-pull arrangement is used, so that when, for example, X2 goes-negative with respect to earth, X1 is made to go-positive by a substantially equal amount. (The terms "go-negative" and "go-positive" in this handbook indicate the sense of the change of potential; thus a point on a circuit would be said to "go-negative" if it becomes more negative or alternatively less positive with respect to earth; it would "go-positive" if it becomes more positive or less negative). The total deflection voltage (that across X2 and X1) is thus doubled. The purpose of this push-pull arrangement is two-fold:

(a) To provide a sweep voltage of 300 to 400V it is more convenient to provide two sawtooth waveforms of opposite polarity and each of 150 to 200V amplitude, and to apply them in push-pull to X2 and X1.

(b) Push-pull input circuits reduced trapezoidal distortion of the trace. The application of a large voltage to only one X plate would alter the electrostatic forces on the electron beam.

14. The method of obtaining the push-pull effect is described in Para. 50. It is sufficient to state here that the main timebase sawtooth voltage is fed from the anode circuit of the timebase-generator valve V3 through C25 to the X2 plate; the valve V5 is solely a phase-inverter which reverses the polarity of the main sawtooth waveform and feeds it through C26 to the other plate X1.

15. The X1 plate is directly connected to the terminal marked X; this terminal is one of the seven at the foot of the front panel. This terminal (impedance to earth usually approx. 34 kilohms as a result of the shunting effect of R24 R25 in series with C26) is available for:

(a) Injecting voltages.

(b) Extracting the timebase sawtooth voltage.

16. The signal to be observed is applied to only one of the Y plates (namely, Y1) either directly (or through a blocking capacitor) or after attenuation or amplification (see Paras. 18 to 20). The resistor R37 (2.2 megohms) ties the Y1 plate to earth potential (i.e. the bias is zero).

17. The normal negative bias (with respect to the cathode K) of the C.R.T. modulating electrode G is adjusted by the knob BRILL. on the front panel; this controls the potentiometer RV8 which is used to alter the brilliance of the spot or trace. To black-out the trace during flyback intervals, a suitable rectangular waveform is applied to the modulating electrode G of the C.R.T. The positive portion of the waveform may be called the "brightening pulse" as it makes the modulating electrode positive-going (i.e. less negative with respect to the cathode) during the forward sweep; at the end of the brightening pulse the rectangular waveform sends the modulating electrode more negative and extinguishes the trace. The brightening pulse is derived from the cathode of V4. The object of the clamping diode V7 shunted by R39 (1 megohm) is to keep the level of brilliance constant and at the level set by the BRILL. potentiometer.

ATTENUATOR, AMPLIFIER AND DELAY LINE

18. The signal to be observed is applied (directly or indirectly) to one Y plate (Y1) of the C.R.T.; to the other Y plate (Y2) is applied an adjustable D.C. voltage which provides the "Y shift" and enables the operator to move the whole trace up or down to an appropriate position for observation.

19. The treatment of the input signal before its application to the Y1 plate depends on:-

(a) its amplitude;

(b) whether it is D.C. or A.C., and - in the latter case - whether or not a wide bandwidth is necessary to give a faithful picture of the waveform;

(c) whether the leading edge is very steep or not; if it is very steep (e.g. in the case of a very short pulse) and comes from a low-impedance source the pulse is delayed by a DELAY line.

20. As regards amplitude the following steps are taken:

(a) If the input signal is of reasonably large amplitude, it is applied direct (or alternatively, through a blocking capacitor) to the Y1 plate. There is thus substantially no change of amplitude.

(b) If the input signal is of very large amplitude, it is applied through an attenuator to the Y1 plate; the attenuator is virtually a tapped resistor that reduces the signal to 1/5th of its input amplitude. The same attenuator serves for both D.C. and A.C. input signals.

(c) If the signal is weak, it is applied to a single valve amplifier V6 whose gain is continuously adjustable. By means of a switch this amplifier will give either a large gain over a narrow bandwidth or less gain over a wide bandwidth. The amplifier cannot be used for D.C. input signals, but is available for amplifying sine waves, rectangular waves, short pulses and other waveforms which may be classed as A.C.

(d) If the signal has a reasonably large amplitude, comes from a low-impedance source (e.g. about 75 ohms) and has a very steep leading-edge (e.g. in the case of a very short pulse), the leading-edge may be observed by delaying the signal until after the start of the timebase. This is effected by passing the signal through a delay line (giving a delay of about 0.5 microsecond) before applying it to the Y1 plate. When the delay line is used, neither attenuation nor amplification is possible with this instrument.

21. The oscilloscope may be used for observing and measuring the effects of

(a) D.C. voltages.

(b) Sinusoidal waveforms (e.g. the sine wave from an A.C. source).

(c) Pulses having a duration as short as 0.1 μsec..

(d) Miscellaneous waveforms, rectangular or otherwise.

The last three categories may be conveniently classed as A.C. Waveforms (other than a pure sine wave) may be regarded as built-up of a Fourier series of component sine waves of different frequencies. A waveform having a sharply-rising or sharply-falling edge will contain very high frequency components; moreover, the shorter the pulse the wider will be the band of its component frequencies. A pulse of, say 1 μsec. length will have A.C. components of several megacycles. If such pulses are to be reproduced with reasonable fidelity, any device (such as an attenuator or an amplifier) inserted between the input terminal and the Y1 plate must preserve most of these very high frequencies. The device should have a reasonably flat response up to, say 1 Mc/s, even though the repetition rate of a pulse waveform may be low.

22. The treatment accorded to the signal before its application to the Y1 plate is determined by the position of the switch marked "Y PLATE" (engraved above the switch-knob). This 2-pole 4-way rotary switch consists of two switches (ganged) shown as SWCa and SWCb in the circuit diagram (Fig. 2).

A suitable switch position enables the observer to deal with a wide variety of inputs according to their amplitude and waveform. Fig. 2 shows the various Y1 plate connections obtainable; the diagram includes the attenuator and amplifier. The contacts of the Y PLATE switch SWCb in Fig. 2 are marked with the lettering engraved on the panel.

23. Using input terminal Y, the Y PLATE switch-knob may be turned so that its white spot comes opposite one of the six positions (reading from left to right). The effect at each position is given below.

Position ÷ 5 D.C. The input is fed across a high resistance (R28, R29, R30); from a low tapping on this resistor chain, connection is made directly to the Y1 plate. No blocking capacitor is inserted and this switch position is therefore suitable for D.C. and also some A.C. inputs. The resistance network acts as an attenuator, reducing the signal to 1/5th of its input value.

Position ÷ 5 A.C. This is similar to the first position except that a blocking capacitor C34 is inserted between the tapping on the resistance network and the Y1 plate. This position is suitable only for A.C. signals; the capacitor will remove any D.C. component (e.g. the high positive D.C. voltage at the anode of an amplifier valve), only the changing voltage producing a picture on the C.R.T. As before, the attenuator reduces the signal to 1/5th of its original amplitude.

Position D.C. The input is applied directly and without attentuation to the Y1 plate. For D.C. signals and some A.C. signals. (The attenuator resistor chain remains in parallel with the input, but its resistance is very high, namely 2.56 megohms).

Position A.C. As previous position, but a blocking capacitor C33 is interposed. For A.C. signals only; there is no attenuation.

Position DELAY. The input is applied to the Y1 plate through a delay line having an impedance of approximately 75 ohms and terminated at the Y1 plate end with a 75 ohm resistor R36. The effect of this line is to delay any applied signal by approximately 0.5 microsecond. It also introduces a certain amount of distortion and attenuates the signal by an amount proportional to its source impedance, the attenuation being 2/1 for a 75 ohms signal. Hence this facility can be used only for signals from a low-impedance source and having an amplitude of at least 30V.

Position AMP. The signal is applied to the grid of the Y-plate amplifier V6 through a blocking capacitor C27 to remove any D.C. level which would upset the amplifier operating conditions. Hence D.C. signals cannot be amplified in this instrument.

24. AMP L.F. - H.F. Preset Control. This consists of two ganged switches SWDa and SWDb. By engaging a screwdriver (through the panel hole below the X-shift control-knob) in the recessed slotted end of the spindle of this control and turning either way as far as possible without using appreciable force, the amplifier bandwidth/gain characteristic can be altered. Clockwise rotation gives low gain reasonably flat to 1 Mc/s. Counter-clockwise rotation gives high gain reasonably flat to 150 Kc/s.

25. LF. AMP The amplifier system consists of pentode V6 with resistance-capacitance coupling to the Y1 plate. The V6 anode circuit also contains an inductor L3 next to the anode for the purpose of improving the response at the higher frequencies. The anode resistor consists of two resistors R35 (5.6 kilohms) and R34 (18 kilohms) in series. In the LF.AMP position the whole of this (i.e. 23.6 kilohms) is in the anode circuit. The gain is large, being 38 db at 500 c/s and falling by 3 db at 25 c/s and at 150 kc/s. (A loss of 3 db is equivalent to a fall of peak voltage to 71 per cent of the maximum.) This position is therefore suitable for low-frequency A.C. inputs and cases where steep edges of waveforms are not found or where fidelity of reproduction is not important.

26. HF. AMP The arrangement is exactly the same as in the LF. AMP position, except that the switch SWD comes into play: SWDa short-circuits anode resistor R34 of 18 kilohms and SWDb short-circuits the cathode resistor R32 of 150 ohms. The HF. AMP position is therefore preferred where very high frequency oscillations are applied to the input terminal Y, or where the nature of the waveform is such that the Fourier series contains very high frequencies (e.g. in a 1 μsec. pulse); in the latter case, the HF. AMP position will give the most faithful reproduction of a pulse.

27. The knob AMP GAIN controls a veriable resistor RV4 (max. 5 kilohms) inserted in the cathode lead. The usual cathode bias resistors R32 (unless short-circuited) and R33 shunted by C30 provide a negative bias on the control-grid of the amplifier valve. As the input signal is applied across Y and earth, and as RV4 is not shunted by a capacitor, RV4 will provide adjustable negative feedback; the greater the resistance of RV4, the greater will be the negative feedback and therefore the less the gain provided by the amplifier.

28. In the attenuator network a capacitor C28 (4.7 pF) is shunted across R28 and R29 to preserve a substantially flat response up to 150 kc/s. This is necessary because there is a stray capacitance across R30.

29. The following are comparative figures (approx.) for the various Y1 plate connections:

Y Plate Switch	Input R	Input C	Max. input (peak)	Flat response
÷ 5 D.C. (attenuator without blocking capacitor)	2.45 megohms	25 pF	700V	D.C. to 100 kc/s
÷ 5 A.C.	2.45 megohms	25 pF	700V	25 c/s to 100 kc/s
D.C.	1.2 megohms	50 pF	140V	D.C. upwards
A.C.	1.2 megohms	50 pF	140V	25 c/s upwards
Delay	75 ohms (impedance)	-	140V	-

ATTENUATOR, AMPLIFIER AND DELAY LINE

Y Plate Switch	Input R	Input C	Max. input (peak)	Flat response
AMP. LF (amplifier used)	Very high	50 pF	25V	25 c/s to 150 kc/s
AMP. HF (amplifier used)	Very high	50 pF	35V	25 c/s to 1 Mc/s.

30. DELAY LINE It is usually desirable and sometimes essential that the leading-edge of, say, a pulse should be observed on the C.R.T. The rise-time is the time taken for the leading-edge voltage to reach its maximum value (or, more precisely, to rise between two defined points on the leading-edge). A very steep leading-edge has a very short rise-time. To observe the beginning of the rise, the timebase must start at some instant before the rise begins. In other words, the start of the leading-edge requires to be delayed sufficiently to let the T.B. sweep begin first. This delay is effected in the present instrument by a 0.5 microsecond (approx.) delay-line which delays the whole pulse before it is applied to the Y-plate.

31. It should be noted that the T.B. sweep itself does not start at the beginning of the leading-edge of a triggering pulse; there is a delay which may approach 0.5 microsecond. It is sufficient that the T.B. sweep should begin before the pulse to be observed arrives at the Y-plate, however brief the interval.

32. If observation of the whole of the leading-edge of a pulse is not required, the delay-line need not be used. If the rise-time is long, a small initial portion of the leading-edge may be lost but the rest will probably be seen.

33. The delay-line (of 75 ohms impedance) can be used only if the waveform to be observed comes from a low-impedance source (75 ohms or less); this source might well be a cathode-follower. The signal must be of adequate amplitude; there is no provision for amplifying it.

34. The chief value of the DELAY LINE is obtained when observing very short pulses (e.g. of 0.125 microsecond duration); the rise-time of such pulses is very short. The delay line may, however, be used for displaying the leading-edge of any length of pulse (provided the impedance of the source is 75 ohms or less). Some distortion of the pulse waveform is inevitable, particularly with short rise-times and fall-times.

SYNC INVERTER AND TIMEBASE GENERATOR

35. The X plates of the C.R.T. have applied to them (in push-pull) a sawtooth waveform which is produced by the timebase generator which consists essentially of a Miller transitron based on V3 with V2 (two diodes in a single glass bulb) and V4 as ancillary valves. By suitable switching, two modes of operation are made possible.

(a) Single-sweep working. In this case, an input triggering pulse initiates the "rundown" of the Miller circuit, thus providing the forward sweep of the timebase. At the end of the sweep, the circuits return to the quiescent condition and remain in that state until another trigger pulse repeats the process. (In this mode the screengrid and suppressor-grid of the Miller valve are D.C.- coupled via the cathode-follower V4). The trigger pulse passed on by V1 and V2a is applied to the V3 suppressor-grid.

(b) Free-running. In this case, the successive sweeps follow each other automatically. (In this mode the screengrid and suppressor-grid of the Miller valve are capacitively coupled via the cathode-follower V4).

The T.B. sweep duration in the single-sweep mode of operation may be adjusted between 80 milliseconds and 3 microseconds; in the free-running mode the range is 60 milliseconds to 10 microseconds; the repetition frequency may be varied over the range 10 c/s to 40 kc/s. The T.B. COARSE Switch gives a coarse adjustment by selecting one of five available capacitors (C14 to C18) for free-running and six (C14 to C19) for single-sweep operation; T.B. FINE is a potentiometer (RV3) which, by altering a voltage, provides a fine adjustment.

A table of timebase sweep-frequencies and sweep-times is given in the Operating Instructions.

SYNC INVERTER

36. The input valve V1 of the oscilloscope in conjunction with the SYNC switches SWAa and SWAb (see Fig.1) is primarily a device for inverting the polarity of a negative input sync pulse.

37. A positive pulse is required to trigger ~~and~~ the timebase-generator and if the sync pulse applied to terminal S is negative, the valve V1 is used to convert the pulse into a positive one.

38. If the sync pulse is positive, the SYNC switch is turned to S.S. + F.R. + and the valve V1 becomes simply a cathode-follower. The output across the cathode resistor R4 is lead off through C3 to the SET SYNC variable resistor RV1 which alters the sync amplitude; the V1 anode components R5 and L1 are by-passed by C2 which is joined across V1 anode and earth by means of the switch SWAb in the S.S. + or F.R. + position. As a result of cathode-follower action, the input impedance of the arrangement is very high.

39. If the sync pulse is negative, and single-sweep operation used, the valve circuits are those of a conventional amplifier. The output developed at the anode of V1 is led through C2 to the sync amplitude variable resistor RV1. The effect of the inductance L1 in the anode circuit is to increase the high-frequency response of the sync amplifier and so reduce the time for the anode voltage to rise sufficiently to trigger the timebase-generator. When the SYNC switch is in the S.S. - position, SWAb puts the capacitor C3 across R4, thus virtually short-circuiting the negative feedback. The current through V1 is cut off at a smaller negative voltage on the control-grid than if negative feedback were used. If a negative input pulse of 30 volts is applied to terminal S the anode current is cut off (cut-off occurring at a much lower voltage) and the output pulse would be about 40 volts, whereas if C3 were not used to short-circuit the negative feedback, the output voltage would be about 30 volts. (With negative feedback, it requires a very much greater negative grid voltage to produce cut-off, as an opposing voltage is inserted between control-grid and cathode). The result is that the rise-time of the output pulse is substantially reduced for negative input pulses.

40. The negative feedback is used for the F.R.-position because if it were short-circuited and a sine-wave were used for synchronising, the positive half-cycle would, if over 2 or 3 volts, produce grid current and the impedance at terminal S would drop to a low value. A common case is where the sine-wave comes from a source of fairly high impedance and is applied to the Y plate and also to terminal S (for synchronising the timebase); as a result of grid current, the positive half-cycles would appear clipped or badly distorted on the C.R.T. screen.

41. As the valve V1 plays no part in the operation of the main circuit, it is omitted in the two simplified circuit diagrams used for explaining the single-sweep and free-running modes of operation. The valve V4 is a cathode-follower and plays a subsidiary role; it is convenient to show it below V3.

42. As the complete circuit of the oscilloscope is complicated by the inclusion of switches, and as some of the components play no part in one or other of the modes of operation, it is proposed to explain the two modes separately by the aid of simplified circuits.

SINGLE-SWEEP OPERATION

43. Diag. 1.2 shows, in slightly simplified form, the timebase circuits in use for single-sweep operation. The triggering pulse applied to terminal I will always be positive (if initially negative it will have been inverted by the valve V1). The Miller valve V3 is the one on which attention should be concentrated, the two diodes V2a and V2b (which share a common glass envelope and heater terminals) serve subsidiary purposes, while V4 is a cathode-follower which simply passes-on (without inversion) the voltage variations applied to its control-grid; V4 cathode is the source of the brightening pulses applied to the modulating electrode of the C.R.T.

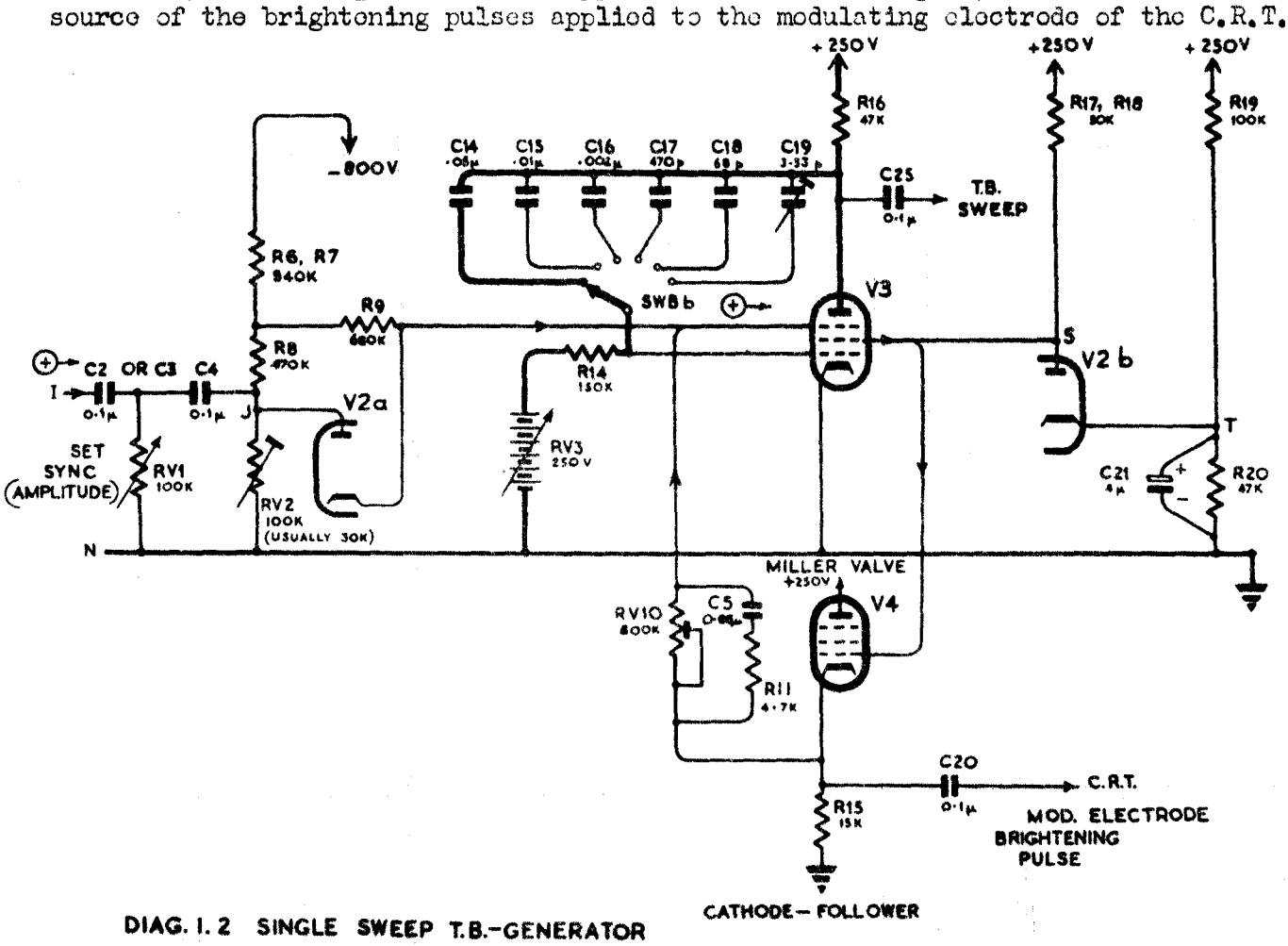

DIAG. 1.2 SINGLE SWEEP T.B.-GENERATOR

44. The valve V3 operates in the usual Miller timebase fashion, the trigger pulse being applied to its suppressor-grid to start operations. (For a general description of the Miller timebase-generator see B.R. 1547(2) and B.R. 1600A). At the end of the "rundown" the anode current is automatically cut off by a negative voltage developed on the suppressor-grid. During the rundown the suppressor-grid remains at earth potential. The sudden switching-on of the anode current and later its sudden switching-off are effected with the aid of positive feedback between the screengrid (which passed current and is therefore in the nature of an anode) and the suppressor-grid; this regenerative feedback is via the cathode-follower V4 which, for some purposes, may be regarded as the equivalent of a direct connection between screengrid and suppressor-grid of V3. (The feedback action is similar to that used in the transitron circuit.)

45. In the quiescent state of the circuit the diode V2(a) is conducting because its anode is positive with respect to its cathode. This diode acts as a clamp which, during the quiescent period, keeps the V3 suppressor grid at a suitable negative potential. The trigger pulse, which is positive, is communicated through V2(a) to the suppressor-grid of V3. As a result of a regenerative action the V3 suppressor-grid potential rises to earth potential, the diode V2(a) ceasing to conduct and isolating the V3 suppressor-grid from the triggering waveform. The T.B. - generator will ignore pulses that arrive during the sweep. When the rundown is completed, V2(a) conducts again and the T.B.- generator is ready to be triggered again.

46. The diode V2(b) conducts when its anode tends to rise above about +80V because its cathode is at this potential. The diode ceases to conduct when its anode potential falls below +80V; the V3 screengrid voltage can thus rise or fall provided it does not exceed +80V.

FREE-RUNNING OPERATION

47. With the SYNC switch in positions F.R. + or F.R. - the timebase-generator is free-running; after the end of each recovery, the forward timebase sweep (i.e. the Miller rundown) starts again of its own accord (instead of waiting for an input trigger pulse as in the single-sweep mode of operation). As in the single-sweep mode, the sweep duration may be varied by selecting the Miller capacitor by means of the T.B. COARSE switch and obtaining a fine adjustment with the T.B. FINE control. The range is 60 milliseconds to 10 microseconds: the repetition frequency may be varied over the range 10 c/s to 40 kc/s. It is to be noted that these ranges are obtained on the first five positions of the SWB switch. With the switch fully clockwise (position 6 in Fig.1), the timebase-generator is switched off by SWBa. Thus, the extra-fast sweep (provided by C19) is not available when the free-running mode is used.

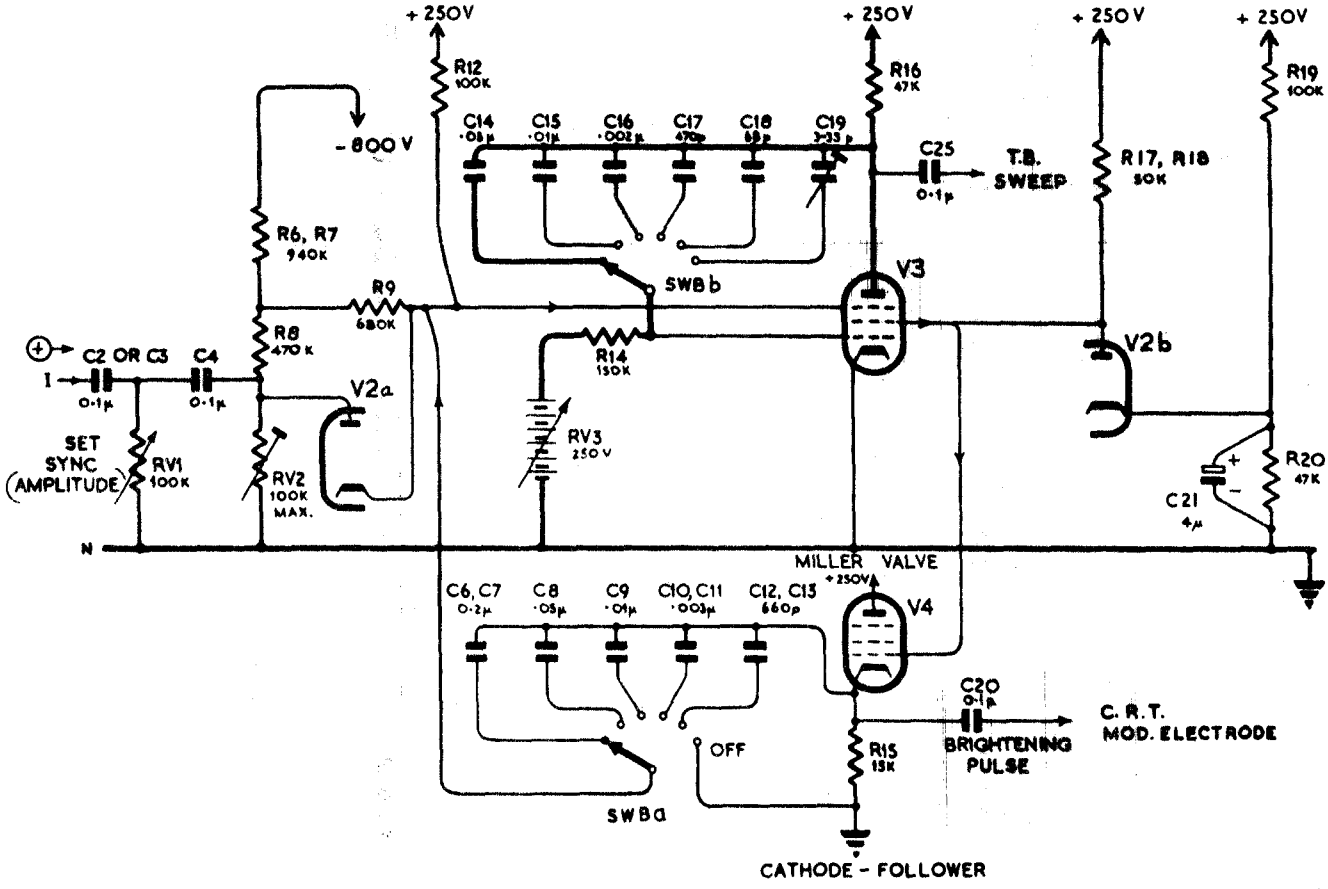

DIAG. 1.3 FREE-RUNNING TB - GENERATOR

48. Diag. 1.3 is a slightly-simplified circuit of the timebase-generator operating in the free-running mode. The circuit differs from the single-sweep circuit of Diag. 1.2 chiefly in that the V4 cathode is capacitively coupled to the V3 suppressor-grid which is connected through R12 to +250V. When first studying the free-running mode, the arrangements for providing synchronising pulses need not be considered.

49. There is no quiescent condition but we can consider the operations as starting with the V3 suppressor-grid beyond cut-off (i.e. no anode current) and the charge on the coupling capacitor (say, C6 C7) leaking off through R12. The V3 suppressor-grid potential rises (becoming less negative) until anode current is allowed to flow. As a result the V3 screengrid current decreases, the V3 screengrid voltage goes-positive, the V4 cathode goes-positive and, as a result of coupling through C6 C7, the V3 suppressor-grid goes-positive. Regenerative action sets in and the V3 suppressor-grid almost instantaneously reaches earth potential. The anode current is small and the anode voltage-drop is small because the anode is connected through the Miller capacitor (in this case, C14) to the V3 control-grid. After the sudden small initial voltage drop, the Miller rundown begins, the anode voltage falling at a constant rate.

At the end of the rundown the anode current decreases and the V3 screengrid current increases, the screengrid going-negative. The V4 control-grid goes-negative as does the V4 cathode. The V3 suppressor-grid therefore goes-negative and reduces the anode current. This action is cumulative and the regenerative effect cuts-off the anode current suddenly.

The Miller capacitor C14 now begins to charge through R16 and the cathode-control-grid path inside V3; the time-constant depends virtually on the values of the Miller capacitor and R16. During the recovery interval (between sweeps) the anode voltage of V3 rises to the full H.T. voltage (+250V) and as R16 is fixed, the time taken will depend on the particular capacitor (C14 to C18) selected by the T.B. COARSE switch SWB1. At the end of the rundown the V3 suppressor-grid is held negative (beyond cut off) by the charged coupling capacitor C6 C7 which proceeds to discharge through R12. The V3 suppressor-grid voltage rises, (actually it rises towards +250V but cannot rise above earth potential). When the suppressor-grid potential reaches the cut off voltage, anode current begins to flow and a regenerative effect starts the next cycle of operations.

The synchronising signal for the free-running mode of operation is applied to the terminal S (see Fig.1) of the instrument and is duly delivered to the input terminal of Diag. 1.3.

TIMEBASE FLOATING - PARAPHASE AMPLIFIER

50. The purpose of V5 is solely to produce a second sawtooth waveform of the same shape and approximately the same amplitude as that provided by the anode circuit of the Miller valve V3 but of opposite polarity. The circuit is of the well-known "floating-paraphase" type (see B.R.1547(2) and B.R.1600A for a general explanation). When the anode of V3, is, for example, going-negative during the rundown, the anode of V5 is going positive. The changing voltage at anode of V3 is communicated through C25 to the plate X2 of the C.R.T., and that at the anode of V5 is communicated through C26 to X1. This doubles the available deflection voltage across the X plates and reduces trapezoidal distortion, as already explained.

P A R T 2

CHAPTER 1

OPERATING INSTRUCTIONS

CHAPTER 2

MAINTENANCE

TESTING AND FAULT FINDING

A P P E N D I X N O. 1

LIST OF COMPONENTS

PART 2

CHAPTER 1

OPERATING INSTRUCTIONS

Abridged operating instructions have been omitted as a few minutes acquaintance with the instrument is sufficient to provide the essential information on the function and behaviour of all the controls. Difficulties likely to be encountered when applying the instrument to a specific test and the connections met in practical use of the instrument are covered below and have been designed to follow a normal operating sequence.

INSPECTION OF INSTRUMENT

1. (a) The instrument when received is housed in a carrying case and is complete with all valves, an A.C. Power Unit and connections, but should be carefully inspected as, although the carrying case has been designed to protect the tube and controls, damage may have resulted in exceptional circumstances. A D.C. Power Unit is supplied separately in a stowage box.

(b) Mains Supply

The mains lead is taken out from the rear left-hand side of the case, and a mains switch and fuses are provided on the rear panel. For A.C. operation A.P.67384 Connection, flexible, is supplied and for D.C. operation A.P.68375 Connection, flexible.

(c) Scale and Viewing Hood

A 6 cm transparent graticule is provided with the instrument, and is of particular assistance in quantitive and comparative tests. The viewing hood can be fitted with the scale if desired.

(d) Mumetal Shield

A cylindrical Mumetal shield is provided to surround the C.R.T. as a precaution against external magnetic fields and those due to the instrument itself. The C.R.T. can be placed in position without removing this shield, but should it for any reason become necessary to remove the shield when servicing or in other circumstances in which the chassis is being handled, care must be taken to avoid the possibility of a sharp knock on the shield as this is liable to alter its magnetic characteristics.

CONNECTIONS

2. The method of connecting the instrument will be given when the use of the terminals and the circuits with which they are associated are described. The only preliminary connections required are the "earth" and the "mains".

OPERATING INSTRUCTIONS

(a) Earth

All the terminals and controls of the instrument are on the front panel. The terminal E serves essentially to connect to the oscilloscope the return or "earth" (low potential) of the external circuits or apparatus with which the instrument is being operated. The oscilloscope will generally operate satisfactorily without being connected to a true earth point, although, whenever it is convenient, such a connection should be made. This independent earth connection is particularly advantageous when the instrument is used in a strong interference field or when the amplifier is being used at high gain.

(b) Mains

(i) Operation from A.C. Power Supply

Before the instrument is connected to the mains supply and switched on, check that the mains voltage selector on the rear panel is set to the position appropriate to the voltage of the mains supply.

(ii) Operation from 24V D.C. Supply

Remove A.C. Power Supply Unit in the manner explained in the Maintenance Instructions and fit A.P.68623 Rectifier Unit 63AL. The instrument will operate satisfactorily from D.C. in the range 22 to 30 volts.

(c) Input

A set of connecting leads is provided for use with the oscilloscope. A screened lead is commonly used to connect terminal "Y" to the source of the signal to be observed, if the signal is D.C, A.C. of low frequency or of H.F. up to 100 kc/s. If the source of the signal is of high impedance and the frequency is high (or the waveform has high-frequency components) a screened connector would not normally be used; moreover under these conditions the input impedance of the oscilloscope should be high (which rules out the use of the delay line in these circumstances).

If it is considered necessary to use a screened lead between terminal "Y" and a high-frequency source of high impedance, it may be desirable to connect a capacitor of low value between the source and the inner conductor of the screened lead. This will prevent a circuit of possibly low impedance from shunting the high impedance of the source and thus altering the operating conditions of the source. If this arrangement is used, a reduction of signal amplitude is to be expected.

C.R.T. CONTROLS

3. (a) 'Y' SHIFT

This provides a means of positioning the picture along the Y axis of the C.R.T. screen. Initially the control knob should be set to the middle position of its travel.

(b) 'X' SHIFT

This provides a means of positioning the picture along the X axis of the C.R.T. screen and may initially be set to its half-way position.

(c) BRILL. (Brilliance)

This control varies the negative bias applied to the modulating electrode of the C.R.T. and should be set in a position that provides just sufficient brightness for the work in hand.

(d) FOCUS

This control varies the voltage of the focusing electrode of the C.R.T. and should be adjusted to give correct focusing.

NOTE: Slight readjustment to both the FOCUS and BRILL. controls may be found desirable when the instrument is actually being used as these are interdependent. Slight de-focusing of the spot may occur at the extreme limits of the 'Y' shift.

TIMEBASE-GENERATOR CONTROLS

4. The main controls affecting the timebase are:-

"SYNC"
"SET SYNC"
"T.B. COARSE"
"T.B. FINE"

All synchronising and trigger voltages are applied to terminal 'S'.

(a) "SYNC"

This is a four-position switch and provides the means of obtaining a "free-running" (F.R.) or "single-sweep" (S.S.) timebase, synchronised from a positive (+) or negative (-) signal as required.

(b) "SET SYNC"

This controls the amplitude of the signal applied to the suppressor grid of the timebase valve in both the single-sweep and free-running conditions. In the free-running condition it is used to synchronise the timebase frequency with the signal applied to the Terminal 'Y', to obtain a steady picture. In the single-sweep condition this knob controls the amplitude of the input trigger pulse.

(c) T.B. COARSE

(i) This is a six-position switch which provides a coarse control of timebase frequency or sweep-time.

(ii) In the free-running condition, positions 1 to 5 enable the timebase frequency to be varied between 10 c/s and 40 kc/s; in Position 6 the timebase is switched off.

(iii) In the single-sweep condition the timebase sweep time can be varied between 80 milliseconds and 3 microseconds using switch positions 1 to 6.

(iv) The range covered by each position of the switch is shown on the label fixed on the top (front) of the instrument (see Table 1).

TABLE 1

T.B. COARSE	FREE-RUNNING (F.R.)	SINGLE-SWEEP (S.S.)
Switch Position		
1	10 - 70 c/s	80 - 10 milliseconds
2	70 - 350 c/s	10 - 2 milliseconds
3	350 - 1500 c/s	2 - 0.5 milliseconds
4	1.5 - 7 kc/s	500 - 100 microseconds
5	7 - 40 kc/s	100 - 20 microseconds
6	OFF	20 - 3 microseconds

(d) T.B. FINE

The T.B. Fine control provides a means for obtaining a continuous variation of timebase frequency and sweep-time and is sufficient to ensure overlap between the ranges covered by the T.B. COARSE switch. This control can be adjusted to give an approximate intermediate timebase frequency or sweep-time between the limits of each position of the T.B. COARSE switch.

(e) Terminal 'X'

This terminal serves two functions:-

(i) With the SYNC switch adjusted to F.R. (+ or -) and the T.B. COARSE switch adjusted to any position 1 to 5, the timebase sweep voltage is available at Terminal 'X', e.g. for externally modulating an F.M. signal generator or frequency-swept oscillator such as A.P.54707 Test Oscillator to obtain the response curve of a receiver.

(ii) With the SYNC switch adjusted to F.R. (+ or -) and the T.B. COARSE switch to position 6, an external timebase sweep voltage may be applied to Terminal 'X' and therefore to the X1 plate. The amplitude of the sweep voltage should be of the order of 400V to obtain a full deflection of the spot.

'Y'-PLATE CONTROLS

5. The controls affecting the signal applied to the 'Y' Plate are:-

'Y' PLATE Control
AMP. L.F. H.F. Pre-set switch.
AMP. GAIN Control.

All signal voltages are applied to Terminal 'Y'.

6. 'Y' PLATE CONTROL

This is a six-position switch and provides:-

(a) A fixed attenuation for D.C. Signals (D.C. ÷ 5).

NOTE: Maximum input voltage MUST NOT exceed 700V.

(b) A fixed attenuation for A.C. Signals (A.C. ÷ 5).

NOTE: The attenuator is capacitance compensated to provide a flat response over the frequency range 25 c/s to 100 kc/s. Maximum input voltage MUST NOT exceed 700V peak-to-peak.

(c) Direct connection to 'Y' Plate. (D.C.)

(d) Connection to 'Y' Plate through blocking capacitor. (A.C.)

(e) Connection to 'Y' Plate through a 0.5 microsecond delay line (DELAY)

NOTE: The input impedance of the delay line is approximately 75 ohms.

(f) Connection to 'Y' Plate through an L.F. or H.F. Amplifier as selected by the AMP. 'L.F. - H.F.' Preset Control.

NOTE: In this condition the output of the amplifier is also fed to Terminal 'A'.

7. AMP. L.F. - H.F. Pre-set control

This Switch selects L.F. or H.F. compensation for the single stage amplifier.

(a) When switched to 'L.F.' the gain is variable up to 38 db (80 times) flat to within 3db from 25 c/s to 150 kc/s, with an input voltage not exceeding 15V r.m.s.

(b) When switched to 'H.F.' the gain is variable up to 28 db (25 times) flat to within 3 db from 25 c/s to 1 Mc/s with an input voltage not exceeding 25V r.m.s.

8. AMP. GAIN Control

This varies the gain of the L.F. or H.F. Amplifier described in Paragraph 7.

CALIBRATION

9. (a) CALIBRATION VOLTAGE

To provide an approximate means of calibrating the C.R.T. deflector plates a calibration winding is included on the A.C. Mains Transformer giving an output of 100V peak-to-peak (34.7V r.m.s.) at Terminal 'C'. To calibrate deflector plates:-

OPERATING INSTRUCTIONS

(i) Connect Terminals 'S', 'C' and 'Y' together.

(ii) Put 'Y' PLATE switch to 'A.C.'

(iii) Put SYNC switch to 'F.R.' + or F.R. -.

(iv) Put T.B. COARSE switch to '1'.

(v) Adjust T.B. FINE and SET SYNC controls to give stationary picture.

(vi) Use graticule to measure peak-to-peak amplitude and convert to volts per cm. The Y-plate sensitivity of the tube should be of the order of 40V/cm.

NOTE: As the voltage is derived from the mains transformer, measurements based upon it are subject to errors due to mains voltage variation, but in the majority of cases an accuracy within 10% is to be expected.

(b) 'Y' SHIFT VOLTAGE

For a more accurate measurement of signal amplitude, Terminal 'Y' SHIFT is provided. To measure the amplitude of a signal:-

(i) Connect a high-resistance Voltmeter (20,000 ohms per volt) or Valve Voltmeter, preferably centre-zero reading, between Terminals 'Y SHIFT' and 'E'.

(ii) Adjust 'Y SHIFT' control for zero reading on Voltmeter and note position of timebase sweep on the graticule.

(iii) Adjust 'Y SHIFT' control until the peak of the signal being measured is 'cut' by the position noted originally on the graticule, adjusting the range of the Voltmeter as necessary.

(iv) The amplitude of the signal can then be read directly from the voltmeter.

NOTE: The measurement of signal amplitude in this manner only applies when the 'Y' PLATE switch is at position 'AC' or 'DC'.

10. The Calibration voltage at Terminal 'C' can also be used to trigger the timebase in the single-sweep condition or to synchronise the timebase with the mains frequency in the free-running condition. For single-sweep conditions the triggering action is only effective where the mains frequency is greater than 400 c/s A CAL. PHASE Preset Control is available so that a signal (applied to Terminal 'Y') having a repetition frequency the same as the frequency of the A.C. supply to the oscilloscope, can be displayed.

The facility of triggering the single-sweep timebase generator from the terminal "C" is primarily for obtaining test waveforms. As the trigger-voltage is sinusoidal, sweeps faster than about 100 microseconds cannot be reliably obtained.

PART 2

CHAPTER 2

MAINTENANCE.

TESTING AND FAULT-FINDING

1. MECHANICAL FEATURES

The undermentioned conventions have been adopted in the description that follows:-

(a) The outer metal case is referred to as the case; the rear lid is removable.

(b) The front panel of the instrument is the panel on which the main controls are mounted. The front of the front panel is seen when the C.R.T. screen is being observed; on the back of the front panel the control potentiometers, CYTC switch etc. are mounted. The front panel is hinged and may be swung forward towards the observer after removing the C.R.T. and undoing the two captive screws below the markings CAL PHASE and AMP. L.F. H.F. (See ~~Fig. 6~~ DIAG 1.1).

(c) The box-like assembly of components is described as the main chassis. The rear component board is a sheet of insulating material farthest from the front of the instrument.

(d) The terms top, bottom, front, back, left-hand side and right-hand side are used on the assumption that the instrument is in a horizontal normal position and viewed from the front.

2. CONNECTING SOCKETS

Two connecting leads are provided, one for A.C. and the other for D.C. operation. Each lead is terminated at one end with a multi-pole socket which is provided with one single and two double locating keys; the required socket is orientated until the single key slips into the appropriate channel in the plug on the left-hand side of the instrument. The A.C. multi-pole socket has three sockets (marked A, B and C) and the multi-pole D.C. socket has four sockets (marked A, B, D and C, D not being used). It is impossible to mate the D.C. socket with the plug of the A.C. power unit; it is likewise impossible to mate the A.C. socket with the D.C. plug when the D.C. power unit is used in the instrument.

3. REMOVAL OF COMPONENTS, VALVES ETC.

(a) Removal of Case

Remove the input socket and stand the instrument upright on its front guard-rail. Slacken the two slotted knurled screws on the rear lid. (using a coin to loosen) until the lid can be removed. When the lid is removed, the case may be pulled upwards and removed.

(b) Removal of Power Unit

With instrument vertical, slacken (with a coin) the four spring-loaded knurled screws securing the power unit to the main chassis, until a click is heard; do not screw right out. (In the horizontal position of the instrument, two of these screws are on the top of the power unit chassis just forward of the transformer, and the remaining two are at the bottom with their heads towards the back of the instrument).

Holding the main body of the instrument with the left hand, pull the transformer upwards with the right hand until the power unit comes away from the 10-pole plug.

(c) Removal of Cathode-ray Tube

Lay the instrument horizontal. Remove the die-cast ring holding the hood and graticule by a slight counter-clockwise rotation. Press the ceramic C.R.T. -holder forward against the Mumetal screen as far as it will go and release; the C.R.T. will now no longer be retained and its base pins will disengage from the C.R.T. holder; rocking the C.R.T. gently, pull it out.

(d) Removal of Valves V1 to V6

Press the metal valve-retainer downwards and rotate approximately 30 degrees in a counter-clockwise direction and lift off. The valve may then be withdrawn from its holder.

(e) Removal of Valve V7

This diode is exposed, at the rear right, having no retainer. The top pin should first be very gently prised forward towards the front panel sufficiently to disengage it from its socket. The diode is then removed by withdrawing it from its bottom sockets.

(f) Servicing of Most of Slung Components

This may be effected by removing the case as described in (a). To Service the slung components at the front of the main chassis it is necessary to swing back the hinged front panel in the manner described in (g).

(g) Servicing Components on Back of Front Panel and Front of Main Chassis

Having removed the C.R.T., fully slacken the two captive screws on the front panel; these are positioned below the holes marked CAL PHASE and AMP L.F. H.F. The hinged front panel will now swing down exposing the components on the back of the front panel and those at the front of the main chassis.

(h) Removal of Capacitors C41, C43 or C45

Remove C.R.T. as described in (c). Undo connections on the underside of the appropriate capacitors by removing the nuts on the capacitor terminals. Swing back front panel in the manner described in (g). Unsolder the leads from the ends of the delay line. Remove conical Mumetal screen and delay line assembly by:-

(i) removing the two screws, (at the front end of Mumetal screen) that secure it to the chassis.

(ii) removing the two screws securing the screen bracket to the tapped holes in the top of the main chassis.

(iii) removing the two screws and lock nuts on the rear supporting bracket of the delay line.

The Mumetal screen and delay line can then be completely removed from the chassis. The screws securing the bracket of the Mumetal screen also retai capacitor C41. Capacitors C43 and C44 are each retained by screws enterin tapped holes in the top of the main chassis. The capacitor C41 may now be withdrawn through the top of the main chassis.

(j) Removal of Capacitor C44

Remove power unit and C.R.T. Undo connections on the underside of the capacitor by removing the nuts on the capacitor terminals. Remove conical Mumetal screen as in (h). Remove the four screws fastening the brackets o the rear component board through the feet of the capacitor C44 into the tapped holes in the top of the main chassis. Remove screws holding rear delay line bracket to rear component board. Fold back the rear component board with its brackets, to enable the capacitor to be withdrawn through the top of the main chassis.

(k) Removal of Components on Rear Component Board

Components on the front (nearest front panel) of the rear component board are readily accessible. Those on the back can be serviced by removing the power unit as in (b).

(l) Removal of Rectifier MR1

Remove power unit as in (b). Unsweat the connections to the ends of the rectifier. Swing outwards the hinged front panel as in 1(b). Remove the nuts at the ends of the rectifier. The rectifier can now be removed by sliding the front end inwards until it is clear of the slot in the front bracket and withdrawing the back end from the hole at the rear.

(m) Servicing the Power Units

Remove power unit from main chassis as in (b). All components except the transformer may now be serviced by unsweating the connections and undoing the appropriate screws. To remove the transformer, first remove the on-off switch and the 10-pole socket. The screws holding the transformer are then accessible.

TESTING AND FAULT-FINDING

4. PRELIMINARY CHECKS

Set Oscilloscope SYNC to FR+ or FR- and T.B. COARSE to Position 4. The T.B. FINE control is adjusted fully counter-clockwise.

The following items should be checked before removing the Oscilloscope from its case:-

(a) Check the mains voltage tapping on the primary of the transformer.

(b) If there is no spot or trace, check the mains power supply and fuses ~~(FS3 and FS4~~. [illegible] AND FS1

(c) Check that the calibrator voltage is correct with Valve Voltmeter A.P.67921, or Avo Type 47A, ensuring that the CAL. PHASE control is fully counter-clockwise. Valve Voltmeter should read about 33V, and Avo 47A should read about 25V (Range 120V A.C.)

(d) With Valve Voltmeter A.P.67921 check that a P.D. exists between Y-SHIFT terminal and E terminal by rotating the Y-SHIFT potentiometer from its maximum (clockwise) position to its minimum (counter-clockwise) position. The valve voltmeter range used should be 480V BAL (centre zero). There should be a full-scale swing on the meter.

After checking as in paragraph 4, the following procedure should be carried out to determine location and extent of the fault.

5. TESTING PROCEDURE

Remove the Oscilloscope from its case and check that no arcing has taken place. Carry out a searching visual inspection of components. If no physical fault can be seen, commence testing as below (set the primary A.C. voltage to 230V 50 c/s). Switch on the Oscilloscope and leave running for ten minutes to allow the valves and H.T. voltages to settle down before commencing tests. All potentials are relative to the chassis and should remain within ± 15 per cent of the values given. In the fault-finding procedure given below, the selection of the systems to be used will depend on the following cases:-

A. Neither a spot nor a trace can be obtained.

B. A spot can be obtained.

C. Timebase is too short.

D. Trace unstable on Single-sweep (S.S.).

6. CASE (A): NO SPOT OR TRACE

The fault will probably be one of the following:-

(a) E.H.T. voltage (from rectifier system) low, a short-circuit on the E.H.T. resistor chain, resistor chain open-circuited.

(b) Cathode-ray Tube V8 deteriorated as a result of age or rough usage.

(c) The heater supply for Cathode-ray Tube open-circuited.

TABLE 2

Components	A.P.47A(AVO)		Valve Voltmeter A.P.67921
	Range	P.D.	
C43	1,200V	-750V	-950V
C41	1,200V	-540V	-811V
C40	1,200V	240V	250V

7. Check voltage (for Y-shift potentiometer) at junction of R42 and R43; this should be about 274 volts on valve voltmeter.

8. If voltages given in Table 2 are in error by more than ± 15% check for open-circuits on E.H.T. resistor-chain junctions and check components in resistor chain from circuit diagram. Also check voltage at C41 with chain open-circuited.

9. If the voltages are as in Table 2, check heater voltage of C.R.T. (V8). If the heater voltage is correct, change the C.R.T. Proceed with tests given immediately below (Case B).

10. CASE B: WHEN A SPOT CAN BE OBTAINED:-

When SYNC is switched to free-running and a spot only can be obtained on the C.R.T., this indicates fault in timebase generator circuit based on V3 and V4.

11. Connect Cossor Oscilloscope to anode of V3. If there is no output saw-tooth waveform, switch T.B. COARSE to another position; this will check the capacitors C14 to C18 and C6 C7 to C12 C13.

12. The voltage tests in Table 3 should then be carried out (the figures given being typical) under following conditions:-

Switch T.B. COARSE to Position 6
T.B. FINE fully counter-clockwise
SYNC to S.S.+ or S.S.-
AMP. GAIN fully clockwise
AMP. switch to L.F. (counter-clockwise)

TABLE 3

Valve	Test-point	A.P.47A(AVO)		Valve Voltmeter A.P.67921
		Range	P.D.	
V4	Cathode (pin 2)	480V	62V	63V
V3	Anode (pin 5)	1,200V	152.5V	240V
V3	Screengrid (pin 7)	1,200V	60V	60V
V3	Suppressor (pin 6)	120V	-5.5V	-9.5V
V2b	Cathode (pin 1)	480V	60V	88V
-	Wiper of RV3	120V	8V	11.5V

13. If voltages are in error by more than ± 15% remove V3 and V4 and check resistors with ohmmeter or Megger, and compare values with those given in component list or circuit diagrams. If resistor values are as stated on circuit diagram, replace valves V3 and V4 and re-check voltages.

14. Turn SYNC switch to FR+ or FR- and T.B. COARSE switch to range 4 and compare waveforms appearing at the electrodes of V3 and V4 on Cossor Double Beam Oscilloscope; these should be as depicted on Fig.6. These waveforms are drawn to a scale of 30V per cm and should be approximately the same size on Cossor Double Beam Oscilloscope and Type 13A Oscilloscope.

15. These waveforms are applied direct to the A.C. Y1 plate of the Cossor Double-Beam Oscilloscope or A.M. Type 13A Oscilloscope.

16. <u>CASE C: TIMEBASE IS TOO SHORT</u>

When the timebase is too short (say, half its normal length) the fault is most likely caused by absence of output from V5.

17. Set CT.52 SYNC to FR+ or FR- COARSE to range 4 and check waveform at

(a) Anode V5,
(b) Control-grid V5.

and compare amplitudes and shape with diagrams on Fig.6.

18. Check H.T. voltage at C40. Turn SYNC switch to S.S.+ or S.S.- and check voltages at V5 anode and screengrid (Table 4). The voltage should be within ± 15%. If the voltages are outside this tolerance, test components and valves.

TESTING AND FAULT-FINDING

TABLE 4

Component	A.P.47A(AVO)		Valve Voltmeter CT54 A.P. 67921
	Range	P.D.	
C40	1,200V	240V	250V
Valve Electrode			
V5 Anode (Pin 5)	120V	23V	30V
V5 Screengrid (Pin 7)	1,200V	136V	146V

19. Other possible causes of short timebase trace are:-

(a) incorrect setting of RV2 and/or RV10

(b) change of Valve V3.

In these cases proceed as in Para. 20(b).

20. CASE D: TRACE UNSTABLE ON SINGLE-SWEEP

(a) Check amplitude of sync pulse at output of V1. If amplitude and polarity are correct, check voltage of suppressor-grid of V3. If bias voltage on suppressor-grid is low, this will account for the instability of the timebase. Adjust suppressor-grid voltage as instructed in sub-paragraph (b) below, having first switched-off the oscilloscope. The Valve Voltmeter CT54 should be worked off its batteries (not mains) as there is less chance of a shift of zero with time.

(b) (1) Connect the valve voltmeter CT54 so that the D.C. HIGH terminal is connected to the junction of resistors R52 (330 ohms) and R9 (680 kilohms). (Note the other end of R52 is connected to pin No. 6 of V3).

(2) The LOW terminal and earth terminal of the CT54 should be connected to the CT52 chassis and to earth respectively.

(3) The operating instruction on the valve voltmeter should be carefully read, the SET ZERO adjusted (the oscilloscope being switched off) for zero reading.

(4) Set function switch on CT54 to DC-.

(5) Set voltage selector switch of CT54 to 24 volts (carefully resetting zero control if necessary).

(6) Set CT52 TB COARSE switch to position 1.

(7) Set TB FINE control fully counter-clockwise.

(8) Turn SYNC switch to SS+.

(9) Set Y PLATE switch to A.C.

(10) Adjust the SET SYNC control fully counter-clockwise.

(11) Turn preset potentiometer RV2 fully clockwise.

(12) Switch-on oscilloscope and allow it five minutes to warm up.

(13) Adjust the potentiometer RV10 until the CT54 valve voltmeter indicates -17 volts ± 0.5 volt (i.e. negative with respect to chassis). (Disconnect the CT54 D.C. HIGH lead and connect to the oscilloscope chassis to check the zero of the valve voltmeter and readjust zero control, if necessary; reconnect the CT54 positive lead to the junction of R52 and R9.)

(14) Adjust RV2 in a counter-clockwise direction until the CT54 valve voltmeter reads -10.5 to -11.0 volts (i.e. negative with respect to chassis). This VOLTAGE IS CRITICAL and the zero of the valve voltmeter CT54 should be checked as in (13) above. It is now necessary to check this suppressor voltage over a wide range as follows:

(15) Turn TB FINE control slowly in a clockwise direction and check that the suppressor voltage does not fall below 10.5 volts.

(16) Set TB COARSE control to position 2 and repeat (15) above.

(17) At no setting in (15) or (16) above should the voltage on the CT54 fall below -10.5 volts, but may rise to -12 volts or more. If the voltage should fall slightly below -10.5 volts, it should be brought up to -10.5 volts by a slight readjustment of RV2.

(18) Lock the preset controls RV2 and RV10.

(19) Switch-on a pulse generator, e.g. pulsed I.F. Signal Generator A.P.61354 or Range Calibrator Design 2, and in the case of the former, arrange for a +ve pulse 10 microseconds long and P.R.F. 100 c/s to be injected into the S terminal of the CT52. In the case of the range calibrator it should be used on 50 cycle mains to give a pulse at 50 pulses per sec., positive polarity and of large amplitude (i.e. amplitude control set well up). See Note 2.

(20) Turn the CT52 SET SYNC control in a clockwise direction until the timebase is triggered and measure the length of trace to check that it is at least 3 cm when the TB COARSE control is in positions 1 and 2, and the TB FINE control is turned from one extreme to the other. In general this will be easily met, but occasionally a poor specimen of CV.2209 or CV.329 is encountered, and if a short trace is obtained (i.e. less than 3 cm) another valve should be tried and the setting-up procedure repeated.

NOTE 1

Due to the characteristics of some CV.2209 or CV.329 valves, when set to the single-sweep condition (6, 7, 8, 9 above), an occasional valve may be found which persists in free-running, i.e. with no trigger applied a line appears instead of a spot, and the valve voltmeter reading will fluctuate. This condition should not occur after the setting-up detailed above, but if it still persists the valve should be rejected and another used, and the setting-up procedure should be repeated.

NOTE 2

In paragraph (19) a pulse generator or range calibrator is mentioned, but if not available any pulse having a repetition frequency of 50 to 500, about 15 to 20 volt amplitude and pulse length 0.5 µsec or longer, will do. The appropriate polarity should be selected on the SYNC switch.

When the Range Calibrator Design 2 is used, the controls should be set as below:-

Control Range	Set to 5000 yd.
Sync P.R.F.	50
Sync	int.
Output Sync	Low impedance +
Output Sync amp	10
Input Sync amp	Not used
Cal. amplitude	Not used
Voltage 230V	

Take lead from sync output to S terminal of CT52.

21. If the suppressor-grid voltage is -15 to -30 volts the diode V2 should be replaced and the setting on RV2 and RV10 readjusted. When the bias voltage is too high (say -30 volts) difficulty will be found in triggering the timebase, as a larger trigger pulse would be required than the valve V1 is capable of giving.

22. When RV2 and RV10 have been adjusted, or V2 and V1 replaced, the timebase should be checked with Cossor Oscilloscope (A.P.3336A) or 13A Oscilloscope A.P.10S/831. The following settings of the Miniature Oscilloscope CT52 are required: set mains voltage selector to 130 volts, the instrument being fed from a 500-cycle supply; turn T.B. COARSE to range 3, join C and S terminals, turn SYNC switch to SS+ or SS-, turn T.B. FINE control fully clockwise.

Check that waveforms are as shown on Fig. 5.

(When a 50 c/s supply only is available, an external sync pulse must be used - such as that from a range calibrator or square-wave generator (e.g. a Pulsed - I.F. Signal Generator). The pulse length should be between 0.5 microsecond and 50 microseconds at a P.R.F. of approximately 1,000 per sec.

23. TESTING AMPLIFIER V6

Switch amplifier to L.F. position. Turn AMP. GAIN to max. (fully clockwise). Connect valve voltmeter to terminal A (output of oscilloscope amplifier). Connect Oscillator G205 or suitable signal generator to oscilloscope Y terminal. Turn Y-PLATE switch to AMP. Check stage-gain and frequency-response. Stage gain of 38 dB is desired, i.e. voltage stage-gain should be approximately 80 times as measured by the height of the trace. It should only be necessary to check frequency at low and high frequency limits 1 kc/s and 150 kc/s. Check that response at 150 kc/s has not dropped to a value lower than 0.7 times the voltage gain at 1 kc/s. (i.e. has not dropped more than 3 dB).

In H.F. position the voltage stage-gain should be approximately 25 times and the gain at 1 Mc/s should not be less than 0.7 times that at 1 kc/s (i.e. has not dropped more than 3 dB).

When using the valve voltmeter, the response may appear to be slightly outside specification, due to the added input capacitance of the voltmeter.

Voltages on the electrode pins should be as in Table 5. Conditions for tests are as follows:-

T.B. COARSE set to Position 6.

T.B. FINE turned fully counter-clockwise.

SYNC switch to S.S.+ or S.S.-.

AMP GAIN fully clockwise.

AMP switch to L.F. for first two tests.

TABLE 5

Valve	Electrode	47A Range	P.D.	A.P.12945 AVO 8 Range	P.D.	Valve Voltmeter A.P.67921
V6	Anode (Pin 5)	1,200V	112V	250V	125V	132V
V6	Cathode (Pin 2)	120V	1.6V	25V	2.6V	2.78V
Switch AMP to H.F.						
V6	Anode (Pin 5)	1,200V	203V	250V	207.5V	216V
V6	Cathode (Pin 2)	120V	2.0V	10V	2.2V	2.32V

24. TESTING DELAY LINE

The purpose of the test is to measure the delay introduced by the delay line.

Equipment required: Range Calibrator Design 2 or Pulsed I.F. Signal Generator A.P.61354.

(a) Range Calibrator's Controls

Set range switch to 1,000 yd.

Set SYNC to internal.

Set S2 to mains voltage. Turn Cal. amplitude to max.

(b) Oscilloscope CT.52 Controls

Turn T.B. COARSE switch to position 6.

Set Y-PLATE switch to A.C.

Turn SET SYNC control to max. (fully clockwise).

Turn SYNC switch to S.S.+

Connect S terminal of Oscilloscope to S+ve Cal output Socket P7.

Connect Terminal Y of Oscilloscope to Cal-ve output Socket P8.

Adjust T.B. FINE control until a calibrator pip appears on the trace. The speed should be adjusted until the first cal. pip appears on the trace at approximately 3 cm from the starting point of the timebase. The length of the timebase to the first cal. pip will be 6.1 microseconds. The calibration pips are 1 μsec. in length. When the delay line is switched-in, the extent of the delay may be measured direct on the graticule. The delay should be between 0.5 and 0.75 microsecond.

25. SETTING-UP PROCEDURE OF TIMEBASE AFTER CHANGING MILLER VALVE (CV.329 OR CV.2209)

When the Miller timebase valve V3 is changed it may be necessary to readjust the preset controls RV2 and RV10. The Valve Voltmeter CT54 employed for setting-up should be worked off its batteries (not mains) as there is less chance of a shift of zero with time. The miniature oscilloscope should be switched off before carrying out the procedure which is set forth in Para. 20(b).

APPENDIX NO. 1

A.P.68622 OSCILLOSCOPE, MINIATURE, CT.52

LIST OF COMPONENTS

" (Items marked with an asterisk are components of A.P. 68623 Power Unit D.C. CT.A1, i.e., the D.C. Power Unit. Power Unit A.C. CTA. 16 is A.M. Ref. 10K/16993) ".

Resistors Circuit Ref.	Name	Joint-Service Ref.	Value	Rating (W)	Tolerance ± %
	Resistors, Fixed, Composition, Grade 2 (insulated)				
R1	"	Z223122	470k	½	10
R2	"	Z221173	330	½	10
R3	"	Z221152	220	½	10
R4	"	Z222089	4.7k	½	10
R5	"	Z22089	4.7k	½	10
R6	"	Z223123	470k	¾	10
R7	"	Z223123	470k	¾	10
R8	"	Z223122	470k	½	10
R9	"	Z223143	680k	½	10
R11	"	Z222089	4.7k	½	10
R12	"	Z223039	100k	¾	10
R13	"	Z222131	10k	½	10
R14	"	Z223059	150k	½	10
R15	"	Z222152	15k	½	10
R16	"	Z222215	47k	½	10
R17	"	Z223039	100k	¾	10
R18	"	Z223039	100k	¾	10
R19	"	Z223038	100k	½	10
R20	"	Z222215	47k	½	10
R21	"	Z223080	220k	½	10
R22	"	Z223080	220k	½	10
R23	"	Z223164	1M	½	10
R24	"	Z223018	68k	¾	10
R25	"	Z223018	68k	¾	10
R26	"	Z222215	47k	½	10
R27	"	Z223164	1M	½	10
R28	Resistor, Fixed, Composition, Grade 1 (non-insulated)	Z218509	1M	½	5
R29	"	Z218509	1M	½	5
R30	"	Z218461	560k	½	5
R31	Resistor, Fixed, Composition, Grade 2 (insulated)	Z221173	330	½	10
R32	Resistor, Fixed, Composition, Grade 1 (non-insulated)	Z217053	150	½	5

Resistors Circuit Ref.	Name	Joint-Service Ref.	Value	Rating (W)	Tolerance ± %
R33	Resistor, Fixed, Composition, Grade 1 (non-insulated)	Z215168	240	½	5
R34	Resistor, Fixed, Composition, Grade 2 (insulated)	Z222164	18k	½	10
R35	Resistor, Fixed, Composition, Grade 1 (non-insulated)	Z217496	5.6k	½	5
R36	"	Z215108	75	½	5
R37	Resistor, Fixed, Composition, Grade 2 (insulated)	Z223206	2.2M	½	10
R38	"	Z223248	4.7M	½	10
R39	"	Z223164	1M	½	10
R40	"	Z223080	220k	½	10
R41	"	Z223248	4.7M	½	10
R42	"	Z223122	470k	½	10
R43	"	Z223038	100k	½	10
R44	"	Z223038	100k	½	10
R45	Resistor, Fixed, Wire-wound, Vitreous-enamelled	Z244009	1.2k	4.5	5
R46	Resistor, Fixed, Composition, Grade 2 (insulated)	Z223017	68k	½	10
R47	"	Z222060	2.7k	¾	10
R48	Resistor, Fixed, Wire-wound, Vitreous-enamelled	Z244009	1.2k	4.5	5
*R49	Resistor, Fixed, Composition, Grade 2 (insulated)	Z222173	22k	½	10
*R50	Resistor, Fixed, Wire-wound, Vitreous-enamelled	A.P.61023	5.6	6	5
*R51	"	A.P.61023	5.6	6	5
R52	Resistor, Fixed, Composition (Grade 2 Insulated)	Z222173	330	½	10
	POTENTIOMETERS				
RV1	Resistor, Variable, Rotary, Composition	Z262171	100k	¼	20
RV2	"	Z262170	100k	¼	20
RV3	"	Z262407	250k	¼	20
RV4	Resistor, Variable, Rotary, Wire-wound	A.P.60928	5k	½	10
RV5	Resistor, Variable, Rotary, Composition	Z262935	2.5M	¼	20
RV6	"	Z262935	2.5M	¼	20
RV7	"	Z262407	250k	¼	20
RV8	"	Z262005	50k	¼	20
RV9	"	Z262170	100k	¼	20
RV10	"	Z262542	500k	¼	20
	CAPACITORS				
C1	Capacitor, Paper, in tubular metal case	Z115552	.01 µF	350V	25
C2	"	Z115506	0.1 µF	350V	20

Resistors Circuit Ref.	Name	Joint-Service Ref.	Value	Rating (W)	Tolerance ±%
	Capacitors (Contd.)				
C3	Capacitor, Paper, in tubular metal case	Z115506	0.1 µF	350V	20
C4	"	Z115506	0.1 µF	350V	20
C5	"	Z115563	0.25 µF	150V	25
C6	"	Z115561	0.1 µF	250V	20
C7	"	Z115561	0.1 µF	250V	20
C8	"	Z115554	0.05 µF	350V	20
C9	"	Z115552	0.01 µF	350V	25
C10	"	Z115623	0.001 µF	350V	25
C11	"	Z115624	0.002 µF	350V	25
C12	Capacitor, Moulded Mica, Metallised	Z123590	330 pF	350V	10
C13	"	Z123590	330 pF	350V	10
C14	Capacitor, Paper, in tubular metal case	Z115554	0.05 µF	350V	20
C15	"	Z115552	0.01 µF	350V	25
C16	"	Z115624	0.002 µF	350V	25
C17	Capacitor, Moulded Mica, Metallized	Z123593	470 pF	350V	10
C18	Capacitor, Ceramic, Tubular	Z132295	68 pF	500V	10
C19	Capacitor, Variable, Air-spaced trimmer	~~Z160010~~ AP65217	~~3-33~~ pF 3-35	350V	-0+80
C20	Capacitor, Paper in tubular moulded case	Z116221	0.1 µF	1200V	20
C21	Capacitor, Electrolytic	Z145024	4 µF	150V	-20+100
C22	Capacitor, Ceramic, Tubular	Z132280	27 pF	500V	10
C23	Capacitor, Paper, in tubular metal case	Z115554	0.05 µF	350V	20
C24	Capacitor, Ceramic, Tubular	Z132280	27 pF	500V	10
C25	Capacitor, Paper, in tubular metal case	Z115506	0.1 µF	350V	20
C26	"	Z115506	0.1 µF	350V	20
C27	"	Z115554	0.05 µF	350V	20
C28	Capacitor, Ceramic, Tubular	Z132251	4.7 pF	500V	±0.5 pF
C29	Capacitor, Moulded Mica, (Foil type)	Z123430	500 pF	350V	10
C30	Capacitor, Electrolytic	Z145224	100 µF	6V	-20+100
C31	Capacitor, Moulded Mica, (Foil type)	Z123430	500 pF	350V	10
C32	"	Z123430	500 pF	350V	10
C33	Capacitor, Paper, in tubular metal case	Z115554	0.05 µF	350V	20
C34	"	Z115554	0.05 µF	350V	20
C35	Capacitor, Moulded Mica, (Foil type)	Z123430	500 pF	350V	10

APPENDIX 1 LIST OF COMPONENTS CONTD.

Resistors Circuit Ref.	Name	Joint Service Ref.	Value	Rating (W)	Tolerance ±%
C36	Capacitor, Paper in tubular metal case	Z115554	0.05 µF	350V	20
C37	Capacitor, Paper in tubular metal case	Z115511	0.5 µF	350V	20
C38	" "	Z115552	0.01 µF	350V	20
C39	" "	Z115569	1 µF	75V	20
C40	Capacitor, Electrolytic	Z145115	16 µF	375V	-20+50
C41	Capacitor, Paper, in rectangular metal case	Z111377	0.5 µF	650V	20
C42	Capacitor, Electrolytic	Z145115	16 µF	375V	-20+50
C43	Capacitor, Paper, in rectangular metal case	Z111377	0.5 µF	650V	20
C44	Capacitor, Paper, in rectangular metal case	Z112521	4 µF	400V	20
C45	" "	Z111377	0.5 µF	650V	20
C46	Capacitor, Paper in tubular case	Z115552	0.01 µF	350V	25
*C47	" "	Z115505	0.05 µF	500V	20
*C48	" "	Z115569	1 µF	75V	25
*C49	" "	Z115569	1 µF	75V	25
	TRANSFORMERS AND CHOKES				
TR1	Transformer, R979/1270	A.P.68641			
*TR2	Transformer, R979/1271	A.P.68642			
L1	Choke, 500 microhenrys ± 10%	A.P.68643			
L2	" " " " "	A.P.68643			
	MISCELLANEOUS				
PLA	Plug, 10-way	A.P.57628			
SKA	Socket, 10-way	A.P.57907			
*SKB	Socket, 10-way	A.P.57907			
PLB	Plug, 3-way	Z560~~060~~			
	Socket, 3-way	Z560100			
*PLC	Plug, 4-way	Z560~~070~~			
*	Socket, 4-way	Z560110			
SWA	Switch, 3-pole, 4-way	A.P.68637			
SWB	Switch, 2-pole, 6-way	A.P.68638			
SWC	Switch, 2-pole, 6-way	A.P.68638			
SWD	Switch, 2-pole, 2-way	A.P.60930			
SWE	Switch, 2-pole, ON/OFF	Z510305			
*SWF	Switch, 2-pole, ON/OFF	Z510303			
MR1	Rectifier, Half-wave, Selenium-iron	A.P.68640			
MR2	" "	A.P.68640			
MR3	" "	A.P.68639			

Resistors Circuit Ref.	Name	Joint Service Ref.	Value	Rating (W)	Tolerance ±%
FS1	Fuse Unit, Light-duty, single-way	Z590170			
"	Fuse-link, Light-duty, 150 mA	A.P.68645			
*FS2	Fuse Unit, Light-duty, single-way	Z590170			
* "	Fuse-link, Light-duty, 150 mA	A.P.68645			
FS3	Fuse Unit, Light-duty, single-way	Z590170			
"	Fuse-link, Light-duty, 2.5A	A.P.68646			
*FS4	Fuse Unit, Light-duty, single-way	Z590170			
* "	Fuse-link, Light-duty, 4A	A.P.61021			
*VB1	Vibrator, Non-synchronous, 24V D.C. input	A.P.68644			
	Valve Retainer	A.P.W3986A			
	Valve Screening Cans, Qty.6	A.P.60796			
	Terminals, Brass, Spring-loaded Qty.7	A.P.60990			
	Valveholder, [illegible] Qty.1	Z560038			
	Valveholder, B7G, Qty.6	Z560127			
	Valveholder, B9G, Qty.1	Z561105			
*	Valveholder, UX4, Qty.1	Z561111 (for Vibrator)			
	Capacitor, Clip, Qty.2	Z970006			
	Knob, Qty. 10	Z970181			
	Connector, Flexible, Screened, 9 ft. long [illegible]	A.P.67384			
*	Connector, Flexible, Screened, 9 ft. long [illegible]	A.P.67385			
	Hood, moulded 2-11/16 in. dia. for CT.52	A.P.61430			
	Capacitor Clip, Qty.2	Z970006			
*	Clip, earthing, for Vibrator	A.P.60643			
	[illegible]	AP 65241			

A.P.68623 ~~RECTIFIER~~ POWER UNIT ~~63AI~~ D.C. CT.A1.

LIST OF COMPONENTS

The components for this D.C. power unit are marked with an asterisk in the list given above.

OSCILLOSCOPE, N

SYNC. INPUT, TIMEBASE - GENERA C

R	1	2	3 4	5				6, 7 8	9		11		12	
C	1				2 3		4				5		6 TO	
Misc.			VI, L1			SWA a SWA b	RV1	RV2	V2a	RV10	SWAc			F

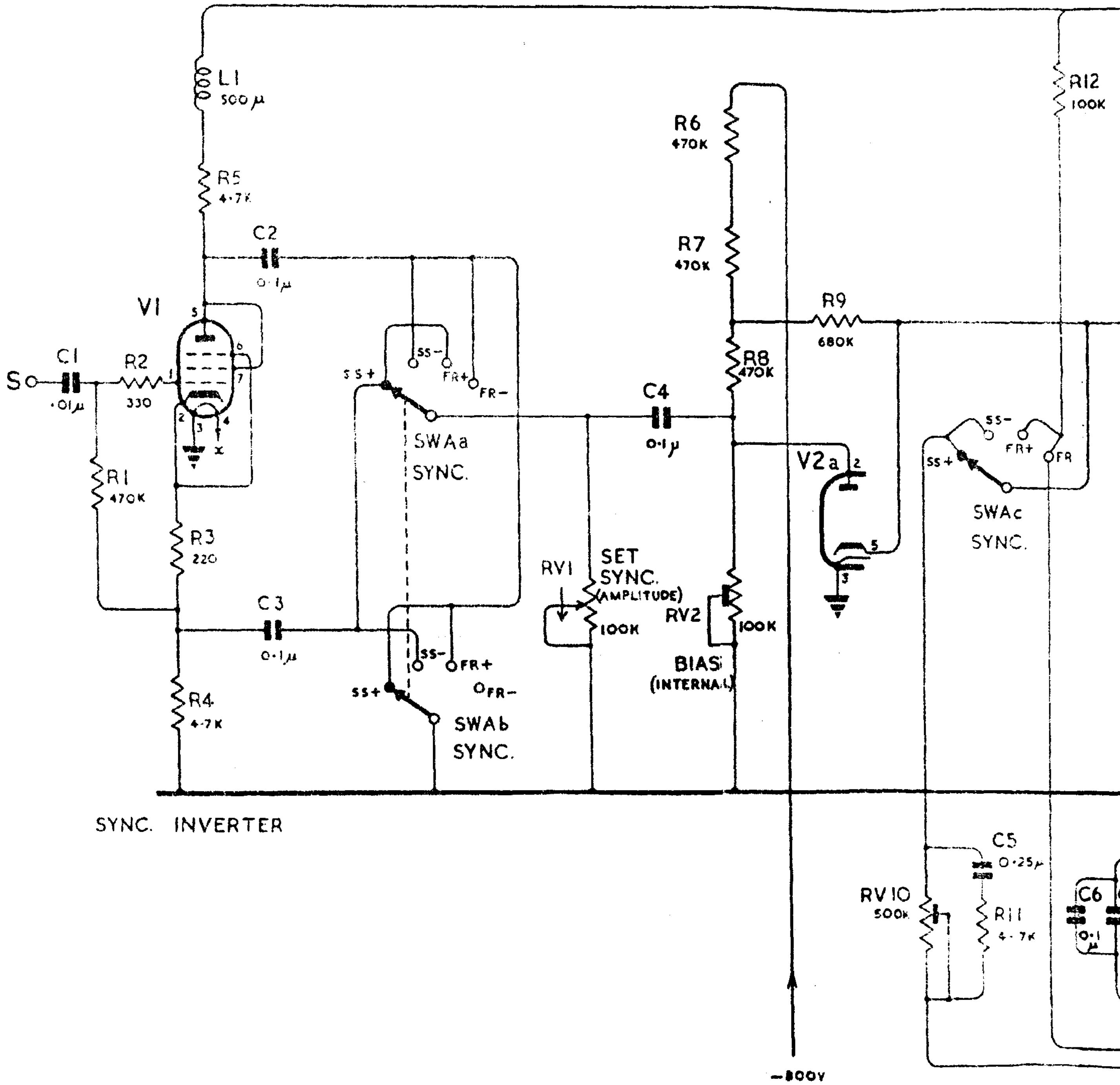

OPE, MINIATURE, CT. 52

ERATOR AND PARAPHASE AMP. CIRCUITS

FIG. 1

12	13	14	15, 16	17	18	19 20	21	22 23	24	25	26	R
6 TO 13	14 TO 19	20	21	22	23, 24	25 26	C
RV3	SWBa	SWBb	V3 V4	V2b	V5	Misc

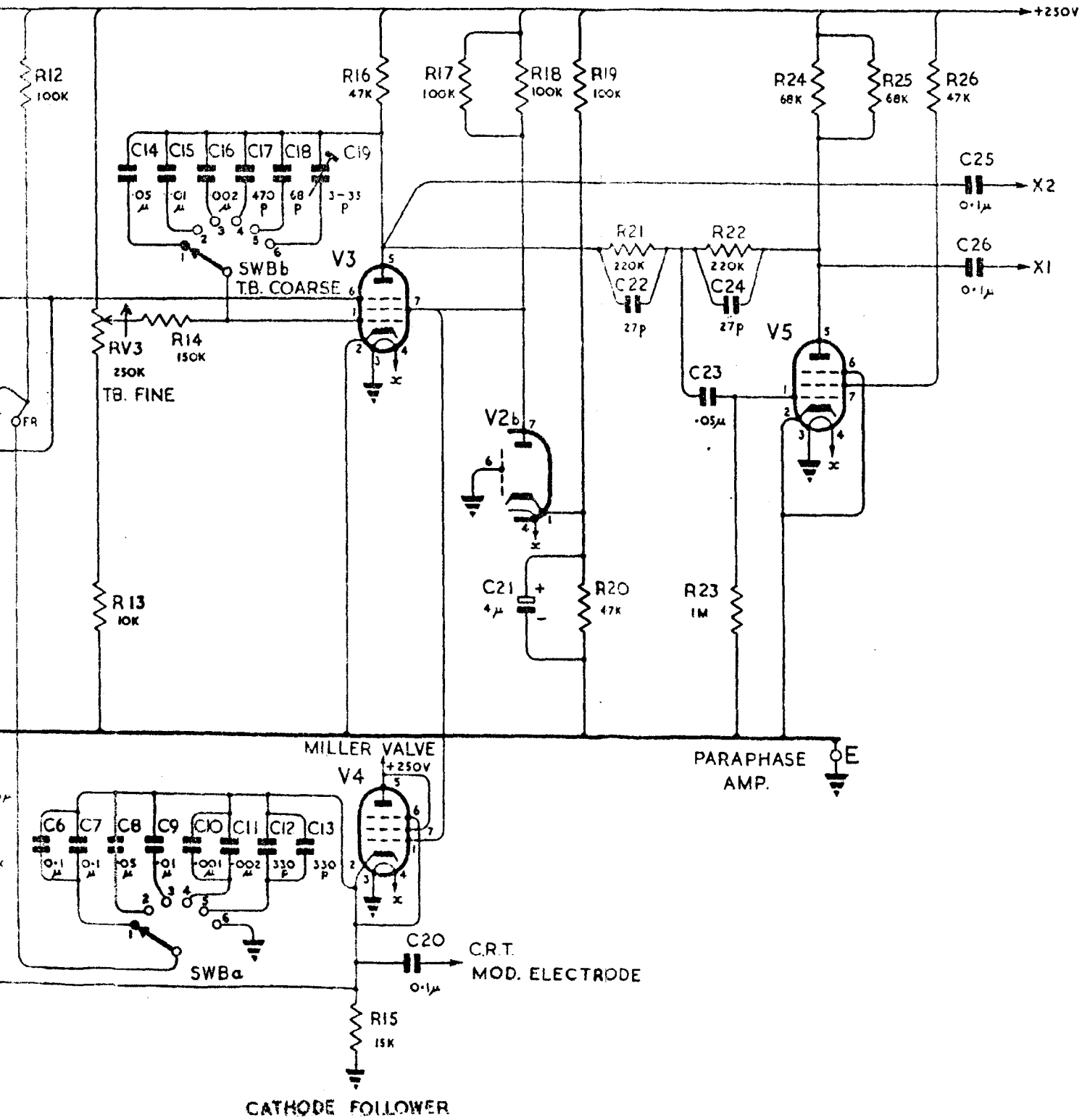

OSCILLOSCOPE, MINIATURE, CT. 52

Y-PLATE AMPLIFIER, ATTENUATOR AND DELAY LINE, AND C.R.T.

2

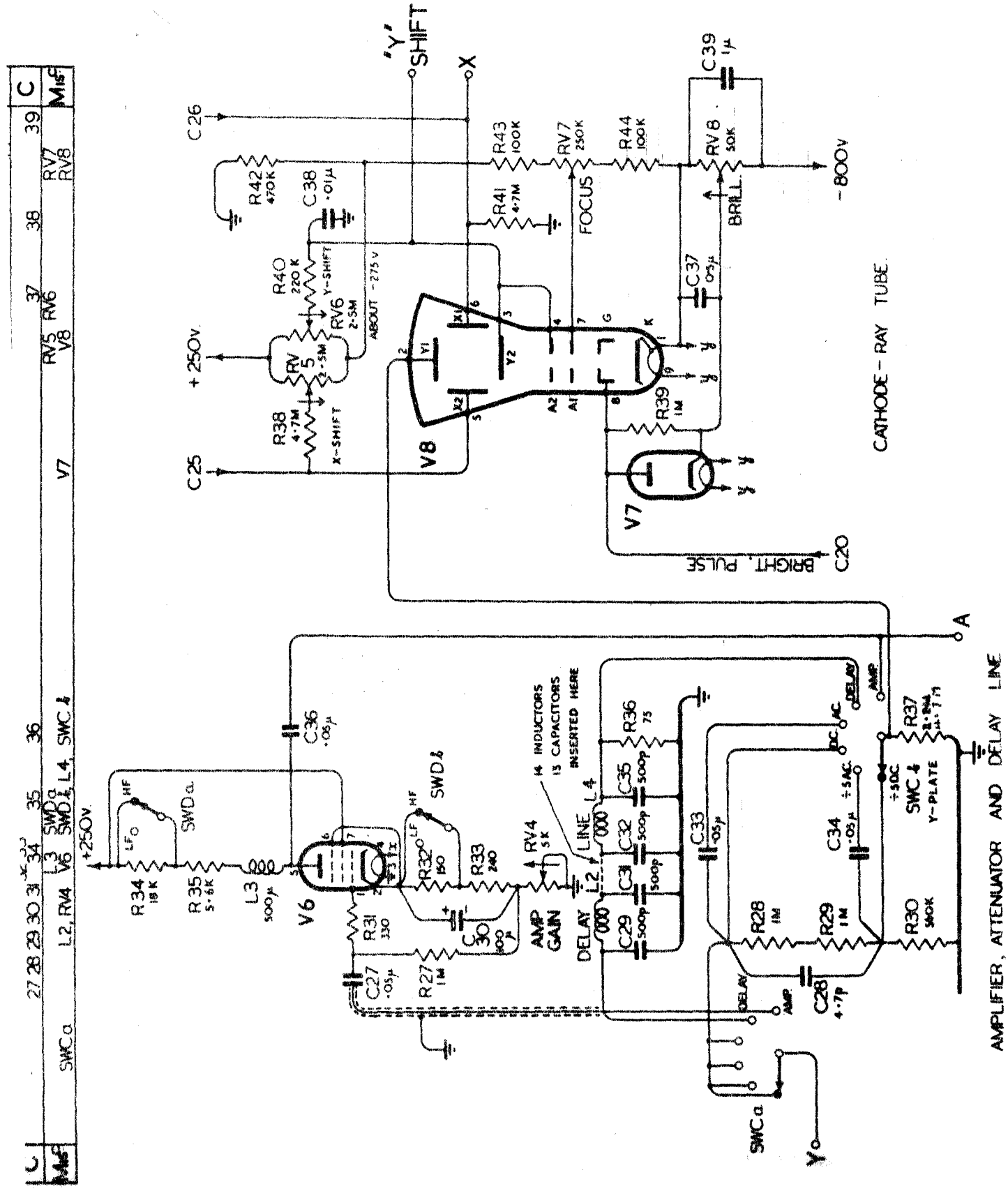

OSCILLOSCOPE, MINIATURE, CT. 52

POWER UNITS AND RECTIFIERS

3

R	45, 47, 48, 46, 49, 50, 51
C	40, 41, 42, 43, 44, 45, 46, 47, 48, 49
MISC.	MR1, MR2, MR3, RV9, PLA, SKA, FS1, FS2, SKB, TR1, TR2, FS3, SWE, FS4, PLB, LKA, SWF, PLC, VB1

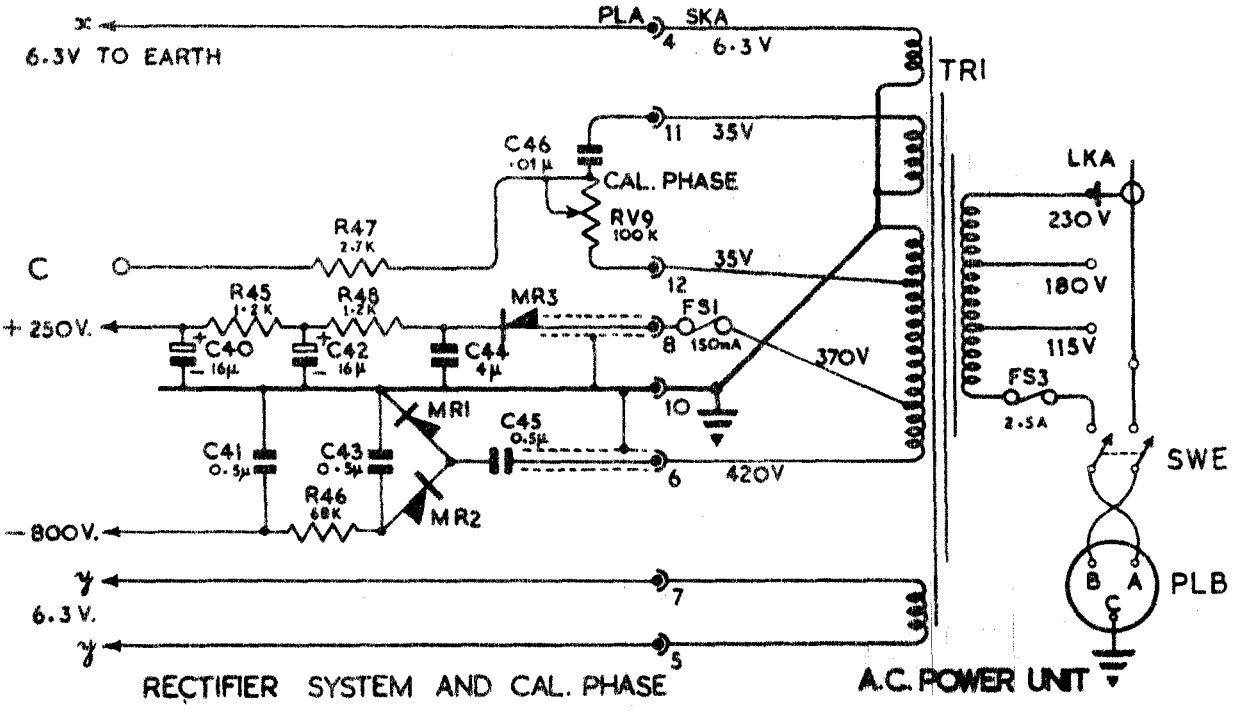

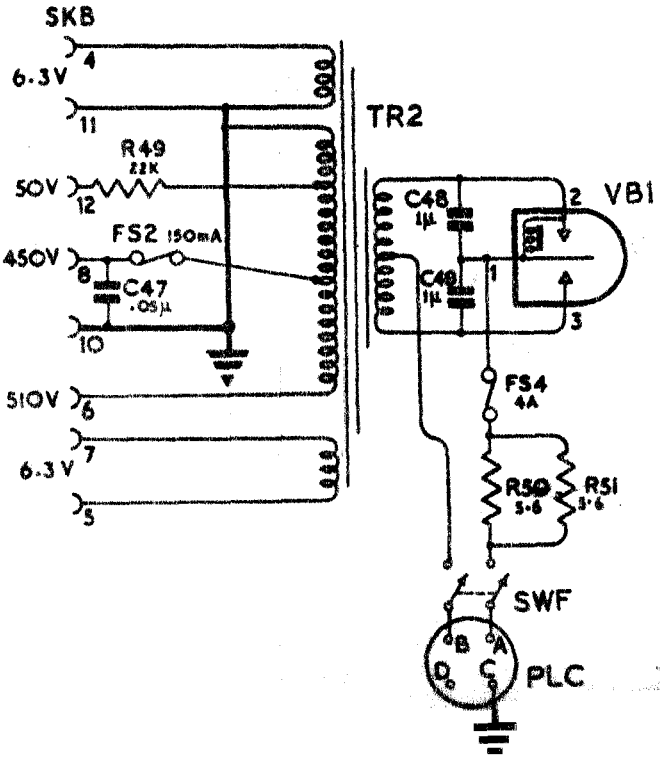

A.P. 68622 OSCILLOSCOPE, MINIATU

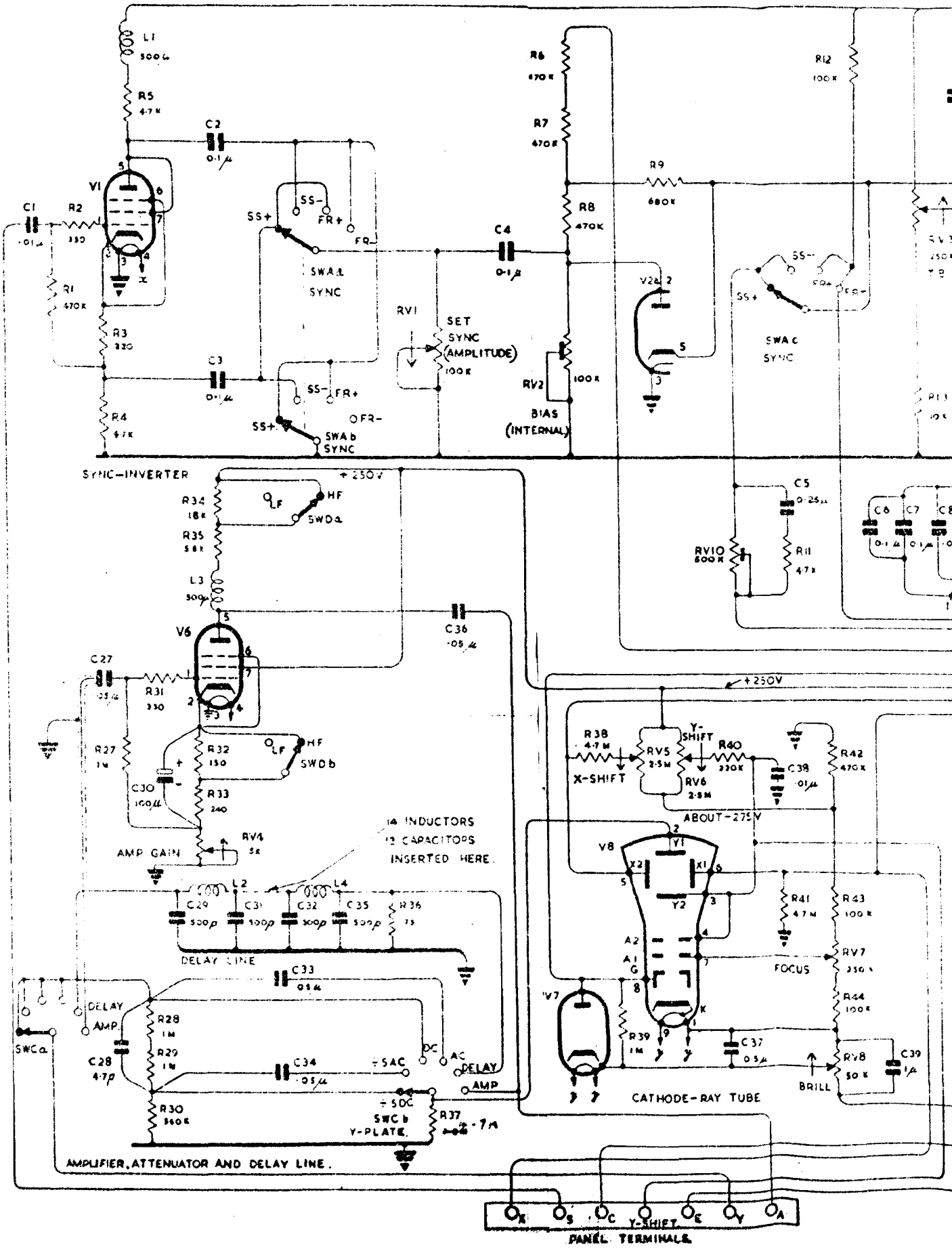

IATURE CT.52 COMPLETE CIRCUIT.

FIG 4

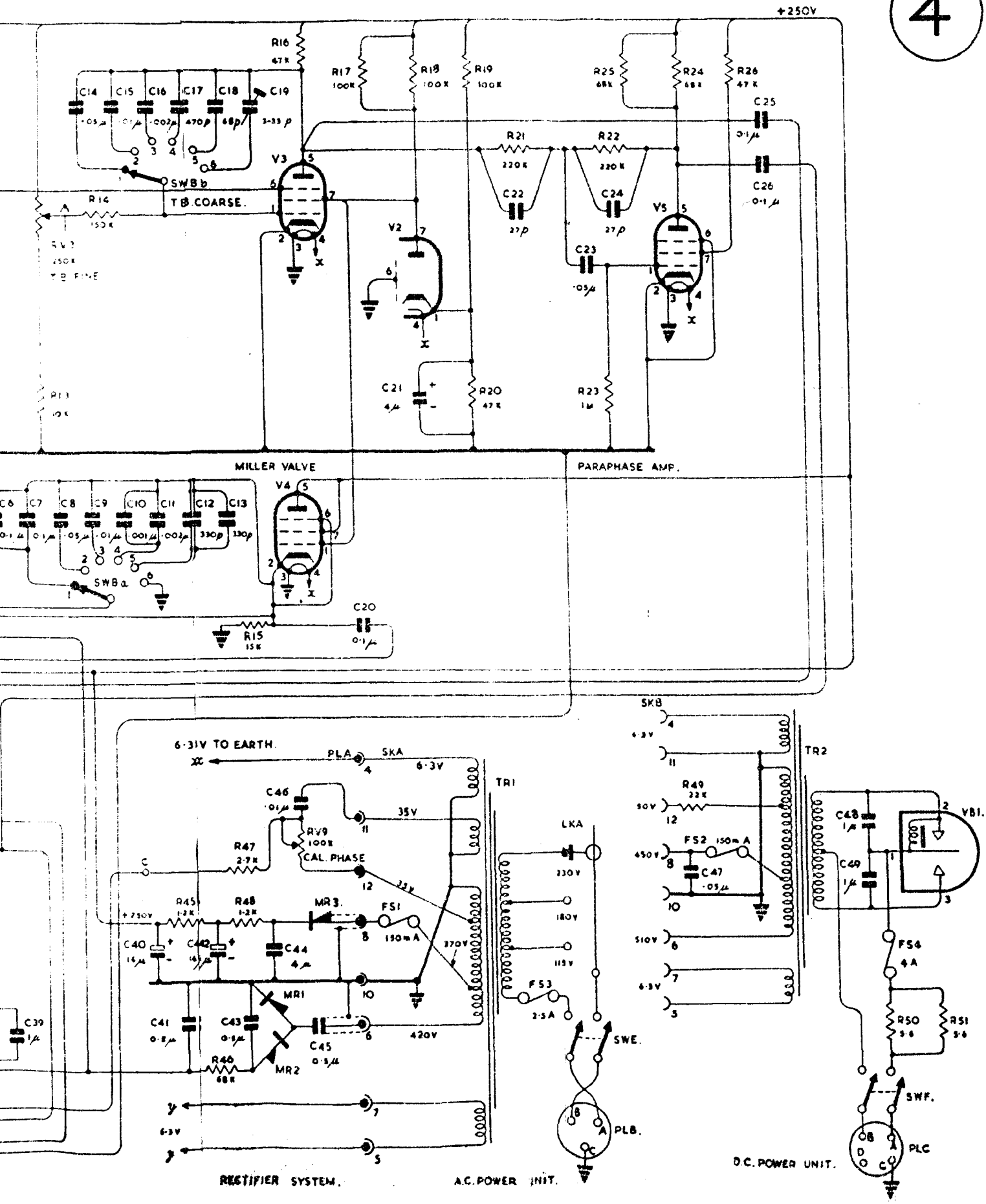

MINIATURE OSCILLOSCOPE

WAVEFORMS OF OSCILLOSCOPE CT 52 (SINGLE-SWEEP).

5

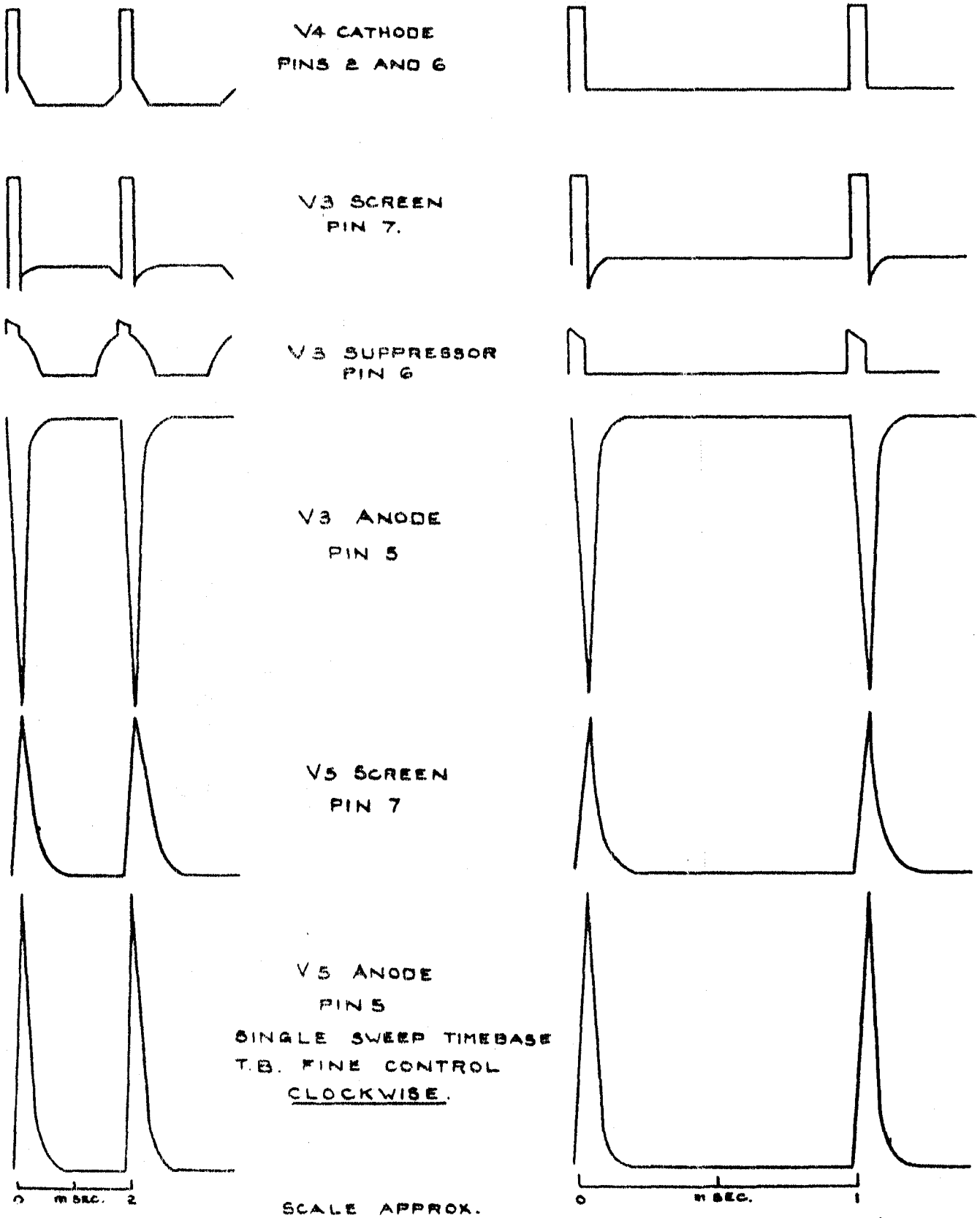

T.B. COARSE RANGE 3
TRIGGER FROM "C"
SYNC 55−

SCALE APPROX.
30 VOLTS / cm

T.B. COARSE RANGE 4
TRIGGER FROM +Ve PULSE
SYNC 55+ (PRF = 1,000 PER SE

MINIATURE OSCILLOSCOPE.

WAVEFORMS OF OSCILLOSCOPE CT.52 (FREE-RUNNING)

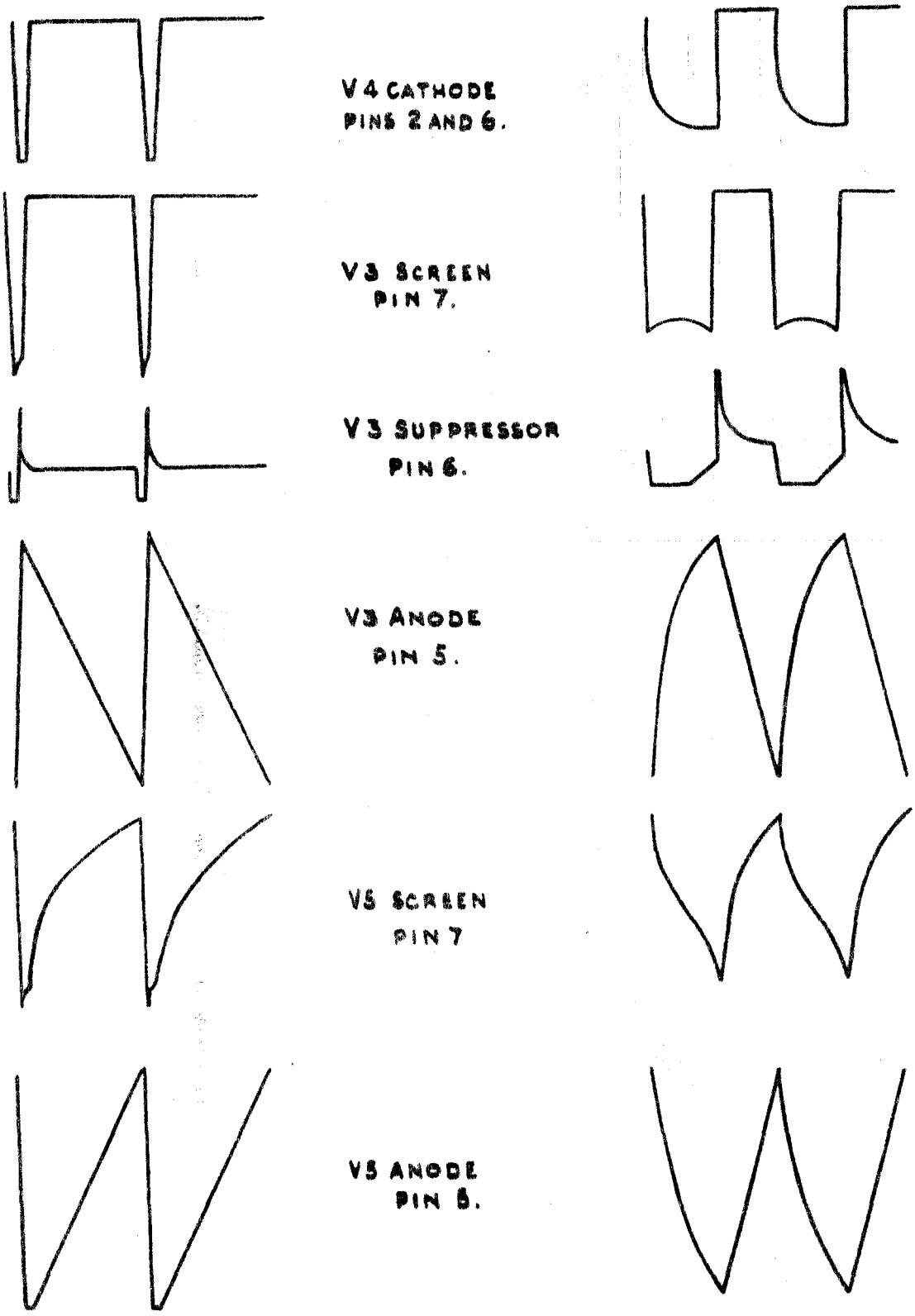

FREE-RUNNING TIME-BASE
T.B. COARSE RANGE 4.

0 μSEC. 100
T.B. FINE.
COUNTER CLOCKWISE

SCALE APPROX.
30 VOLTS/CM.

0 μSEC. 100
T.B. FINE
CLOCKWISE.

OSCILLOSCOPE. MINIATURE. CT. 52

LEFT SIDE VIEW

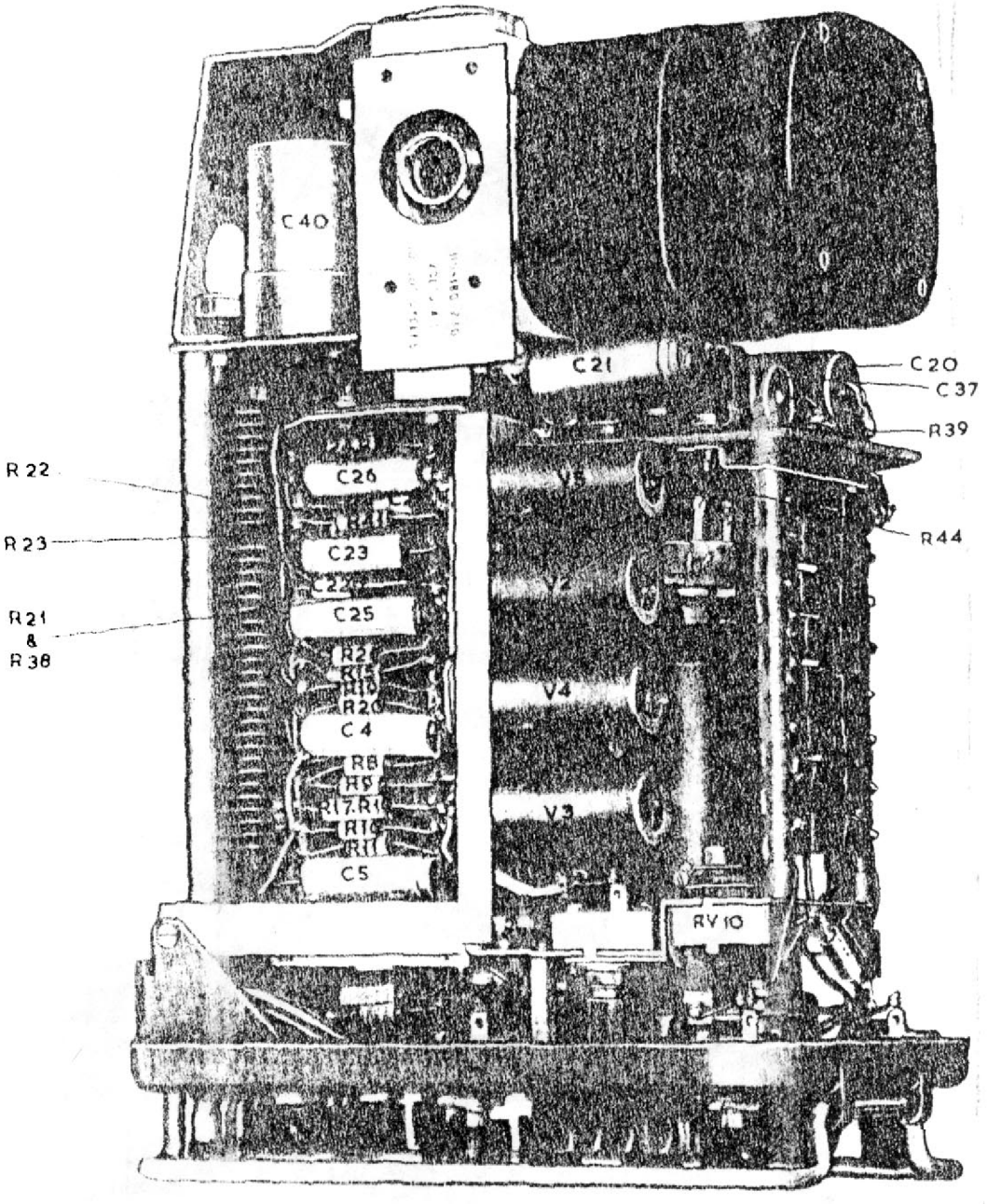

OSCILLOSCOPE. MINIATURE. CT. 52

8

RIGHT SIDE VIEW

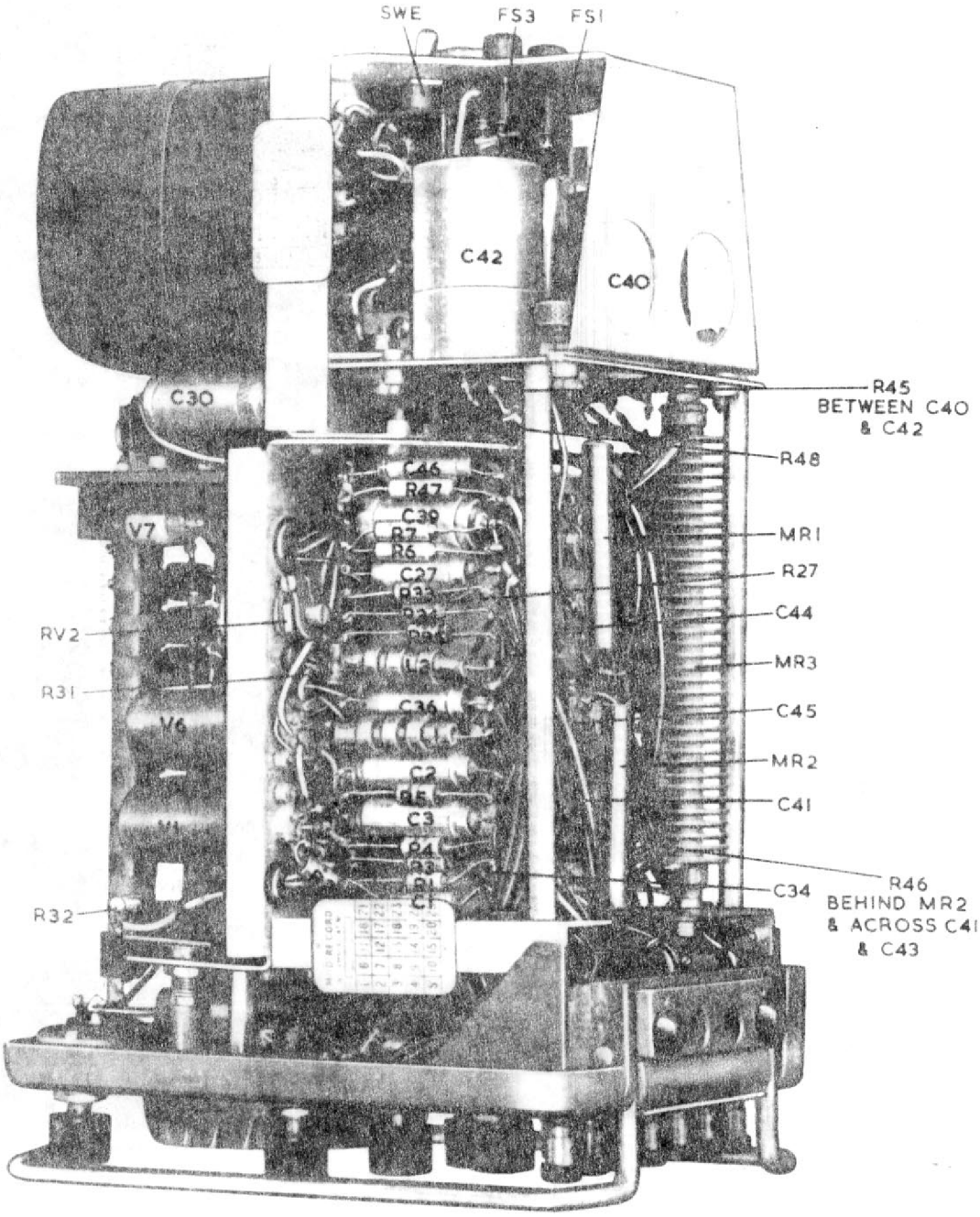

This file was downloaded
from the RTFM Library.

Link: www.scottbouch.com/rtfm

Please see site for usage terms,
and more aircraft documents.